demirel YAPI

www.demireliskele.com

H Tipi Güvenlikli İskele Sistemleri 100m Yükseklikte Yapılan Statik Rapor

Demirel Yapı İskele ve Kalıp Sistemleri
B.Bakkalköy Mh. Samandıra Cd. No 40 Maltepe İstanbul TURKEY
+90 (216) 561 79 65 +90 (549) 210 31 31

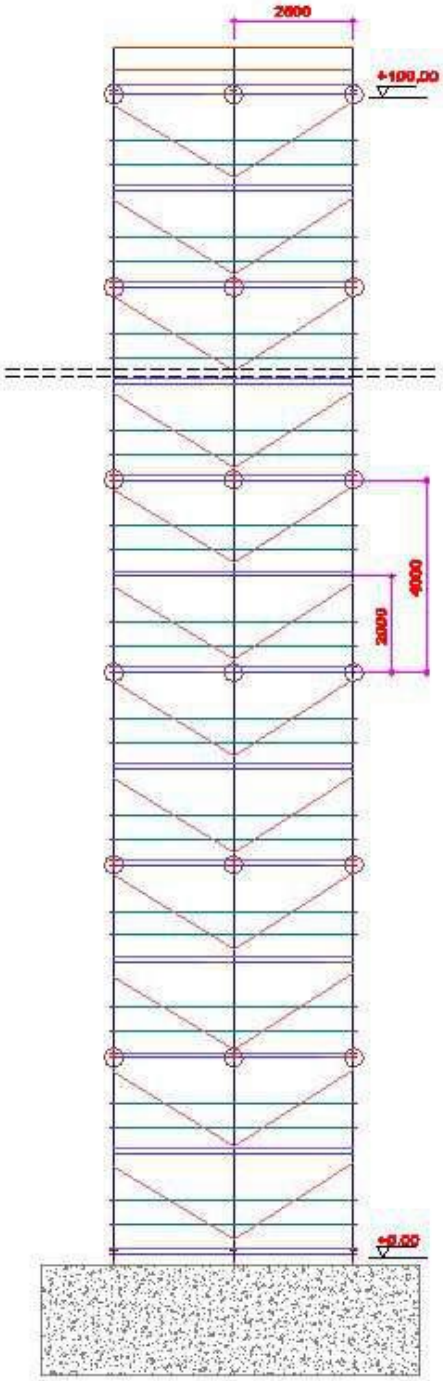

Demirel güvenlikli cephe iskelesi	
Platform genişliği	0.70 m
Platform boyu	2.50 m
İskele yüksekliği	100.0 m
Çalışılabilir rüzgar yükü	0.2 kN/m²
Alt ayar mili açıklığı	0.20 m
Yük sınıfı 4 için	3 kN/m²
İskelenin cepheden mesafesi	0.30 m

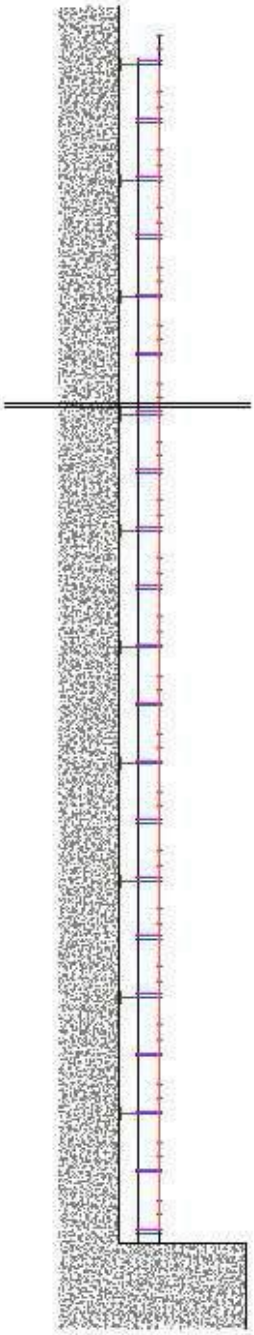

Duvar bağlantı elemanlarına rüzgar yükünden gelen max. kuvvet	
F (KN)	3.31
○ Duvar bağlantı elemanı	

1. İçindekiler

1. İçindekiler 1
2. YAPI BİLGİLERİ 2
3. İskele elemanları 4
4. Duvar ankrajı ve taban mesnetleri 8
5. Ayarlanabilir taban plakası 12
6. MALZEME BİLGİLERİ 13
   6.1. ÇELİK MALZEMESİ 13
7. YÜK DURUMLARI 13
   7.1. Zati ağırlıklar (SW) 13
   7.2. Servis yükleri (SL) 13
   7.3. Rüzgar yükleri (W) 13
8. YÜK KOMBİNASYONLARI 14
9. Nonlineer Kombinasyonlar 14
10. Stability combinations 15
11. Result classes 15
12. STANDARTLAR VE KAYNAKLAR 15
13. SİSTEM TASARIMI 15
14. YÜK ANALİZİ 16
   14.1. Servis yükü durumu (SL) (SL1) 16
   14.2. Rüzgar yükü durumu (W) 16
   14.3. Elemanların üzerindeki yükler 16
15. ANALİZ 91
   15.1. Elemanlardaki iç kuvvetler 91
   15.2. Deplasmanlar - SLS 91
   15.3. Deplasmanlar NC-SLS 91
16. ÇELİK ELEMANLARIN TASARIMI 94

2. YAPI BİLGİLERİ

Hesapları bu raporda gösterilen iskele sistemi tek cephe ve açık iskeledir. İskele 10 açıklıklı ve 100 m yüksekliktedir.

Tasarımı yapılan iskele ebatları şu şekildedir kısa açıklık 0.7 m uzun açıklık 2.5 m * 10 açıklık ve yükseklik 2m *50 kat

İskele sistemi modelinde dikey elemanlar 48,3*3 mm boru ,yatay elemanlar 34*2,5 mm boru diyagonal elemanlar 38*2,5 mm boru

üst profil 50*40*2 mm kutu alt profil 20*40*2 mm kutu profil kullanılmıştır.

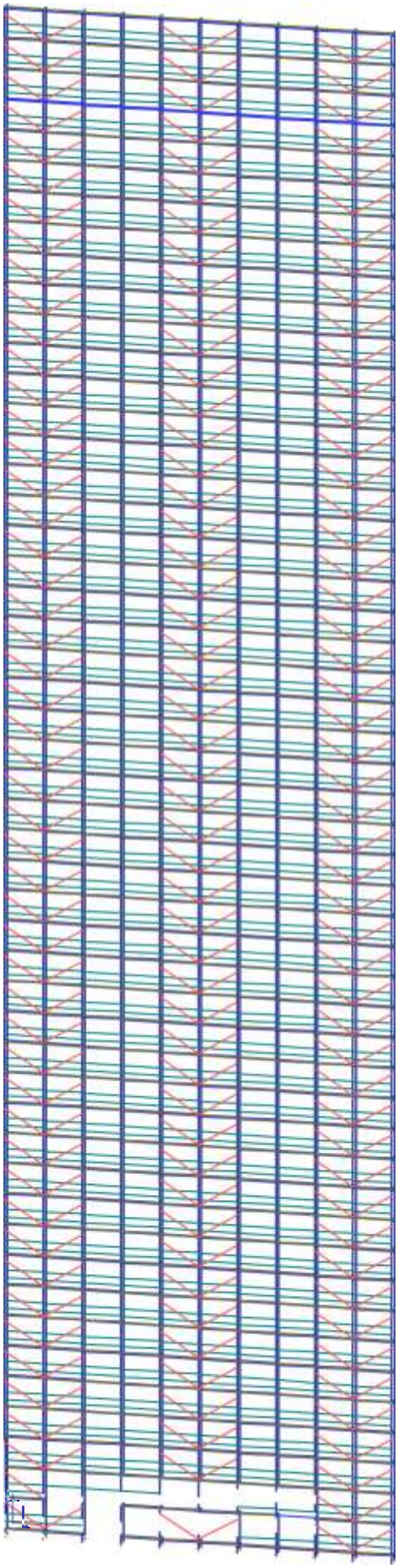

HEINETSCHEK
Bau

3. İskele elemanları

DIYAGONAL		
Type	CHS	
Detailed	38,0; 2,5	
Formcode	3 - Circular hollow sections	
Shape type	Thin-walled	
Item material	S 235	
Fabrication	rolled	
Flexural buckling y-y, Flexural buckling z-z	a	a
A [m^2]	2,7882e-04	
A_y [m^2], A_z [m^2]	1,7750e-04	1,7750e-04
A_L [m^2/m], A_D [m^2/m]	1,1937e-01	2,2304e-01
$c_{Y.UCS}$ [mm], $c_{Z.UCS}$ [mm]	19,0	19,0
α [deg]	0,00	
I_y [m^4], I_z [m^4]	4,4140e-08	4,4140e-08
i_y [mm], i_z [mm]	12,6	12,6
$W_{el.y}$ [m^3], $W_{el.z}$ [m^3]	2,3232e-06	2,3232e-06
$W_{pl.y}$ [m^3], $W_{pl.z}$ [m^3]	3,1558e-06	3,1558e-06
$M_{pl.y.+}$ [Nm], $M_{pl.y.-}$ [Nm]	7,41e+02	7,41e+02
$M_{pl.z.+}$ [Nm], $M_{pl.z.-}$ [Nm]	7,41e+02	7,41e+02
d_y [mm], d_z [mm]	0,0	0,0
I_t [m^4], I_w [m^6]	8,7845e-08	3,2159e-44
β_y [mm], β_z [mm]	0,0	0,0
Picture	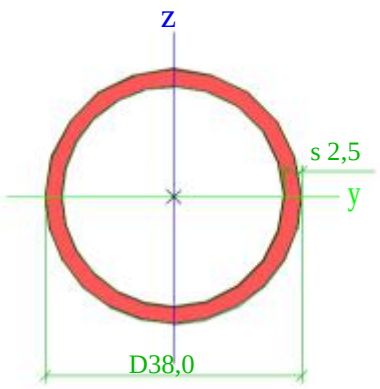	

DİKME		
Type	CFCHS48.3X3	
Formcode	3 - Circular hollow sections	
Shape type	Thin-walled	
Item material	S 235	
Fabrication	rolled	
Flexural buckling y-y, Flexural buckling z-z	a	a
A [m^2]	4,2700e-04	
A_y [m^2], A_z [m^2]	2,7180e-04	2,7180e-04
A_L [m^2/m], A_D [m^2/m]	1,5200e-01	2,8461e-01
$c_{Y.UCS}$ [mm], $c_{Z.UCS}$ [mm]	24,2	24,1
α [deg]	0,00	
I_y [m^4], I_z [m^4]	1,1000e-07	1,1000e-07
i_y [mm], i_z [mm]	16,1	16,1
$W_{el.y}$ [m^3], $W_{el.z}$ [m^3]	4,5500e-06	4,5500e-06
$W_{pl.y}$ [m^3], $W_{pl.z}$ [m^3]	6,1700e-06	6,1700e-06
$M_{pl.y.+}$ [Nm], $M_{pl.y.-}$ [Nm]	1,45e+03	1,45e+03
$M_{pl.z.+}$ [Nm], $M_{pl.z.-}$ [Nm]	1,45e+03	1,45e+03
d_y [mm], d_z [mm]	0,0	0,0
I_t [m^4], I_w [m^6]	2,2000e-07	1,0353e-43
β_y [mm], β_z [mm]	0,0	0,0

Picture	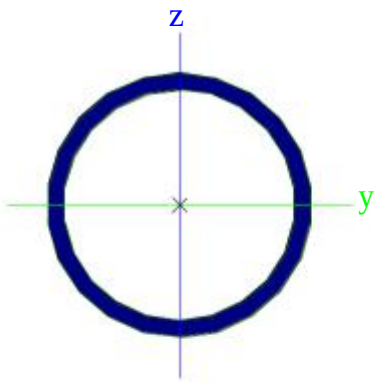	
ALT_PROFIL		
Type	RHS	
Detailed	40,0; 20,0; 2,0; 0,1; 0,1	
Formcode	2 - Rectangular hollow sections	
Shape type	Thin-walled	
Item material	S 235	
Fabrication	rolled	
Flexural buckling y-y, Flexural buckling z-z	a	a
A [m^2]	2,2400e-04	
A_y [m^2], A_z [m^2]	7,4667e-05	1,4933e-04
A_L [m^2/m], A_D [m^2/m]	1,1983e-01	2,2366e-01
$c_{Y.UCS}$ [mm], $c_{Z.UCS}$ [mm]	10,0	20,0
α [deg]	0,00	
I_y [m^4], I_z [m^4]	4,4458e-08	1,4378e-08
i_y [mm], i_z [mm]	14,1	8,0
$W_{el.y}$ [m^3], $W_{el.z}$ [m^3]	2,2229e-06	1,4378e-06
$W_{pl.y}$ [m^3], $W_{pl.z}$ [m^3]	2,8160e-06	1,6960e-06
$M_{pl.y.+}$ [Nm], $M_{pl.y.-}$ [Nm]	6,62e+02	6,62e+02
$M_{pl.z.+}$ [Nm], $M_{pl.z.-}$ [Nm]	3,99e+02	3,99e+02
d_y [mm], d_z [mm]	0,0	0,0
I_t [m^4], I_w [m^6]	3,3717e-08	3,2000e-12
β_y [mm], β_z [mm]	0,0	0,0
Picture	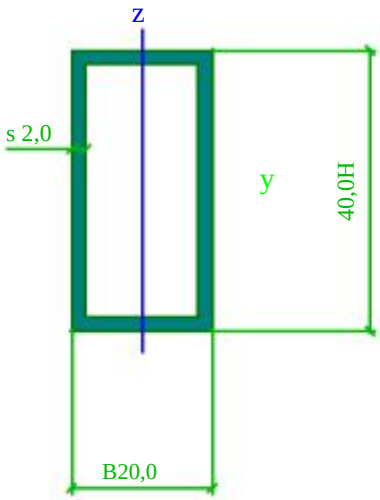	
YATAY		
Type	CHS	
Detailed	34,0; 2,5	
Formcode	3 - Circular hollow sections	
Shape type	Thin-walled	
Item material	S 235	
Fabrication	rolled	
Flexural buckling y-y, Flexural buckling z-z	a	a
A [m^2]	2,4740e-04	
A_y [m^2], A_z [m^2]	1,5750e-04	1,5750e-04
A_L [m^2/m], A_D [m^2/m]	1,0681e-01	1,9791e-01
$c_{Y.UCS}$ [mm], $c_{Z.UCS}$ [mm]	17,0	17,0
α [deg]	0,00	
I_y [m^4], I_z [m^4]	3,0879e-08	3,0879e-08
i_y [mm], i_z [mm]	11,2	11,2
$W_{el.y}$ [m^3], $W_{el.z}$ [m^3]	1,8164e-06	1,8164e-06
$W_{pl.y}$ [m^3], $W_{pl.z}$ [m^3]	2,4858e-06	2,4858e-06
$M_{pl.y.+}$ [Nm], $M_{pl.y.-}$ [Nm]	5,84e+02	5,84e+02

$M_{pl.z.+}$ [Nm], $M_{pl.z.-}$ [Nm]	5,84e+02	5,84e+02
d_y [mm], d_z [mm]	0,0	0,0
I_t [m^4], I_w [m^6]	6,1371e-08	2,0012e-44
β_y [mm], β_z [mm]	0,0	0,0
Picture	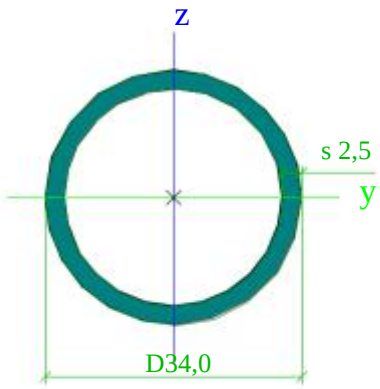	
Platform		
Type	General cross-section	
Shape type	Thin-walled	
Item material	S 235	
Fabrication	rolled	
Flexural buckling y-y, Flexural buckling z-z	d	d
A [m^2]	9,0086e-04	
A_y [m^2], A_z [m^2]	4,9396e-04	2,5006e-04
A_L [m^2/m], A_D [m^2/m]	1,2054e+00	1,2054e+00
$c_{y.UCS}$ [mm], $c_{z.UCS}$ [mm]	-220,4	143,1
α [deg]	0,00	
I_y [m^4], I_z [m^4]	8,6600e-07	1,3629e-05
i_y [mm], i_z [mm]	31,0	123,0
$W_{el.y}$ [m^3], $W_{el.z}$ [m^3]	1,3797e-05	8,5247e-05
$W_{pl.y}$ [m^3], $W_{pl.z}$ [m^3]	1,9350e-05	1,0114e-04
$M_{pl.y.+}$ [Nm], $M_{pl.y.-}$ [Nm]	4,55e+03	4,55e+03
$M_{pl.z.+}$ [Nm], $M_{pl.z.-}$ [Nm]	2,38e+04	2,38e+04
d_y [mm], d_z [mm]	0,0	54,6
I_t [m^4], I_w [m^6]	6,4080e-10	1,8695e-08
β_y [mm], β_z [mm]	-310,5	0,0
Picture	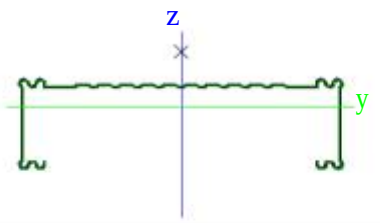	
ÜST_PROFIL		
Type	RHS	
Detailed	40,0; 50,0; 2,0; 0,1; 0,1	
Formcode	2 - Rectangular hollow sections	
Shape type	Thin-walled	
Item material	S 235	
Fabrication	rolled	
Flexural buckling y-y, Flexural buckling z-z	a	a
A [m^2]	3,4400e-04	
A_y [m^2], A_z [m^2]	1,9111e-04	1,5289e-04
A_L [m^2/m], A_D [m^2/m]	1,7983e-01	3,4366e-01
$c_{y.UCS}$ [mm], $c_{z.UCS}$ [mm]	25,0	20,0
α [deg]	0,00	
I_y [m^4], I_z [m^4]	8,7818e-08	1,2466e-07
i_y [mm], i_z [mm]	16,0	19,0
$W_{el.y}$ [m^3], $W_{el.z}$ [m^3]	4,3909e-06	4,9863e-06
$W_{pl.y}$ [m^3], $W_{pl.z}$ [m^3]	5,0960e-06	5,9560e-06
$M_{pl.y.+}$ [Nm], $M_{pl.y.-}$ [Nm]	1,20e+03	1,20e+03
$M_{pl.z.+}$ [Nm], $M_{pl.z.-}$ [Nm]	1,40e+03	1,40e+03
d_y [mm], d_z [mm]	0,0	0,0
I_t [m^4], I_w [m^6]	1,5520e-07	3,0000e-11
β_y [mm], β_z [mm]	0,0	0,0

Picture	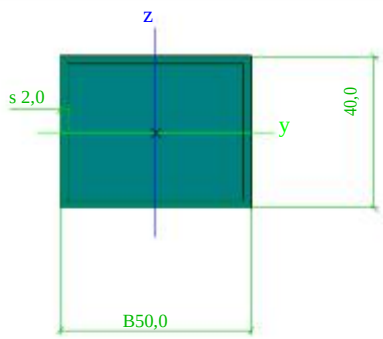	
TOPUKLUK		
Type	C	
Detailed	20,0; 2,0; 2,0; 150,0; 2,0; 20,0	
Shape type	Thick-walled	
Item material	S 235	
Fabrication	rolled	
Flexural buckling y-y, Flexural buckling z-z	d	d
A [m²]	4,4400e-04	
A_y [m²], A_z [m²]	8,0525e-05	2,9247e-04
A_L [m²/m], A_D [m²/m]	4,4800e-01	4,4800e-01
$c_{Y.UCS}$ [mm], $c_{Z.UCS}$ [mm]	5,5	75,0
α [deg]	0,00	
I_y [m⁴], I_z [m⁴]	1,2537e-06	2,3442e-08
i_y [mm], i_z [mm]	53,1	7,3
$W_{el.y}$ [m³], $W_{el.z}$ [m³]	1,6715e-05	1,6212e-06
$W_{pl.y}$ [m³], $W_{pl.z}$ [m³]	2,1186e-05	2,1314e-06
$M_{pl.y.+}$ [Nm], $M_{pl.y.-}$ [Nm]	4,98e+03	4,98e+03
$M_{pl.z.+}$ [Nm], $M_{pl.z.-}$ [Nm]	5,01e+02	5,01e+02
d_y [mm], d_z [mm]	-13,2	0,0
I_t [m⁴], I_w [m⁶]	5,1673e-10	1,2056e-10
β_y [mm], β_z [mm]	-0,1	187,9
Picture	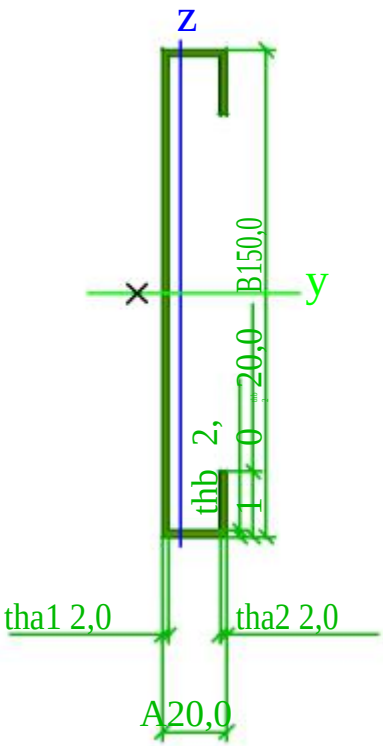	

Explanations of symbols	
Formcode	d - Diameter w - Thickness
A	Area
A_y	Shear Area in principal y-direction
A_z	Shear Area in principal z-direction
A_L	Circumference per unit length
A_D	Drying surface per unit length
$c_{Y.UCS}$	Centroid coordinate in Y-direction of Input axis system

Explanations of symbols	
$c_{Z.UCS}$	Centroid coordinate in Z-direction of Input axis system
$I_{Y.LCS}$	Second moment of area about the YLCS axis
$I_{Z.LCS}$	Second moment of area about the ZLCS axis
$I_{YZ.LCS}$	Product moment of area in the LCS system
α	Rotation angle of the principal axis

Explanations of symbols	
	system
I_y	Second moment of area about the principal y-axis
I_z	Second moment of area about the principal z-axis
i_y	Radius of gyration about the principal y-axis
i_z	Radius of gyration about the principal z-axis
$W_{el.y}$	Elastic section modulus about the principal y-axis
$W_{el.z}$	Elastic section modulus about the principal z-axis
$W_{pl.y}$	Plastic section modulus about the principal y-axis

Explanations of symbols	
$W_{pl.z}$	Plastic section modulus about the principal z-axis
$M_{pl.y.+}$	Plastic moment about the principal y-axis for a positive My moment
$M_{pl.y.-}$	Plastic moment about the principal y-axis for a negative My moment
$M_{pl.z.+}$	Plastic moment about the principal z-axis for a positive Mz moment
$M_{pl.z.-}$	Plastic moment about the principal z-axis for a negative Mz moment
d_y	Shear center coordinate in principal y-direction measured from the centroid
d_z	Shear center coordinate in principal z-direction measured from the centroid
I_t	Torsional constant
I_w	Warping constant
β_y	Mono-symmetry constant about the principal y-axis
β_z	Mono-symmetry constant about the principal z-axis

4. Duvar ankrajı ve taban mesnetleri

Name	Node	System	Type	X	Y	Z	Rx	Ry	Rz	Angle [deg]
Sn38	N1301	GCS	Standard	Friction	Friction	Rigid press only	Free	Free	Free	
Sn39	N1302	GCS	Standard	Friction	Friction	Rigid press only	Free	Free	Free	
Sn40	N1303	GCS	Standard	Friction	Friction	Rigid press only	Free	Free	Free	
Sn41	N1304	GCS	Standard	Friction	Friction	Rigid press only	Free	Free	Free	
Sn42	N1305	GCS	Standard	Friction	Friction	Rigid press only	Free	Free	Free	
Sn43	N1306	GCS	Standard	Friction	Friction	Rigid press only	Free	Free	Free	
Sn44	N1307	GCS	Standard	Friction	Friction	Rigid press only	Free	Free	Free	
Sn45	N1308	GCS	Standard	Friction	Friction	Rigid press only	Free	Free	Free	
Sn46	N1309	GCS	Standard	Friction	Friction	Rigid press only	Free	Free	Free	
Sn47	N1310	GCS	Standard	Friction	Friction	Rigid press only	Free	Free	Free	
Sn48	N1311	GCS	Standard	Friction	Friction	Rigid press only	Free	Free	Free	
Sn49	N1312	GCS	Standard	Friction	Friction	Rigid press only	Free	Free	Free	
Sn50	N1313	GCS	Standard	Friction	Friction	Rigid press only	Free	Free	Free	
Sn51	N1314	GCS	Standard	Friction	Friction	Rigid press only	Free	Free	Free	
Sn52	N1315	GCS	Standard	Friction	Friction	Rigid press only	Free	Free	Free	
Sn53	N1316	GCS	Standard	Friction	Friction	Rigid press only	Free	Free	Free	
Sn54	N1317	GCS	Standard	Friction	Friction	Rigid press only	Free	Free	Free	
Sn55	N1318	GCS	Standard	Friction	Friction	Rigid press only	Free	Free	Free	
Sn56	N1319	GCS	Standard	Friction	Friction	Rigid press only	Free	Free	Free	
Sn57	N1320	GCS	Standard	Friction	Friction	Rigid press only	Free	Free	Free	
Sn58	N1321	GCS	Standard	Friction	Friction	Rigid press only	Free	Free	Free	
Sn59	N1322	GCS	Standard	Friction	Friction	Rigid press only	Free	Free	Free	
Sn114	N16	GCS	Standard	Rigid	Rigid	Free	Free	Free	Free	Rx180.00
Sn115	N42	GCS	Standard	Rigid	Rigid	Free	Free	Free	Free	Rx180.00
Sn116	N68	GCS	Standard	Rigid	Rigid	Free	Free	Free	Free	Rx180.00
Sn117	N94	GCS	Standard	Rigid	Rigid	Free	Free	Free	Free	Rx180.00
Sn118	N120	GCS	Standard	Rigid	Rigid	Free	Free	Free	Free	Rx180.00
Sn119	N146	GCS	Standard	Rigid	Rigid	Free	Free	Free	Free	Rx180.00
Sn120	N172	GCS	Standard	Rigid	Rigid	Free	Free	Free	Free	Rx180.00
Sn121	N198	GCS	Standard	Rigid	Rigid	Free	Free	Free	Free	Rx180.00
Sn122	N224	GCS	Standard	Rigid	Rigid	Free	Free	Free	Free	Rx180.00
Sn123	N250	GCS	Standard	Rigid	Rigid	Free	Free	Free	Free	Rx180.00
Sn124	N276	GCS	Standard	Rigid	Rigid	Free	Free	Free	Free	Rx180.00
Sn125	N18	GCS	Standard	Rigid	Rigid	Free	Free	Free	Free	Rx180.00
Sn126	N44	GCS	Standard	Rigid	Rigid	Free	Free	Free	Free	Rx180.00
Sn127	N70	GCS	Standard	Rigid	Rigid	Free	Free	Free	Free	Rx180.00
Sn128	N96	GCS	Standard	Rigid	Rigid	Free	Free	Free	Free	Rx180.00
Sn129	N122	GCS	Standard	Rigid	Rigid	Free	Free	Free	Free	Rx180.00
Sn130	N148	GCS	Standard	Rigid	Rigid	Free	Free	Free	Free	Rx180.00
Sn131	N174	GCS	Standard	Rigid	Rigid	Free	Free	Free	Free	Rx180.00
Sn132	N200	GCS	Standard	Rigid	Rigid	Free	Free	Free	Free	Rx180.00
Sn133	N226	GCS	Standard	Rigid	Rigid	Free	Free	Free	Free	Rx180.00
Sn134	N252	GCS	Standard	Rigid	Rigid	Free	Free	Free	Free	Rx180.00
Sn135	N278	GCS	Standard	Rigid	Rigid	Free	Free	Free	Free	Rx180.00
Sn136	N20	GCS	Standard	Rigid	Rigid	Free	Free	Free	Free	Rx180.00
Sn137	N46	GCS	Standard	Rigid	Rigid	Free	Free	Free	Free	Rx180.00
Sn138	N72	GCS	Standard	Rigid	Rigid	Free	Free	Free	Free	Rx180.00
Sn139	N98	GCS	Standard	Rigid	Rigid	Free	Free	Free	Free	Rx180.00
Sn140	N124	GCS	Standard	Rigid	Rigid	Free	Free	Free	Free	Rx180.00
Sn141	N150	GCS	Standard	Rigid	Rigid	Free	Free	Free	Free	Rx180.00
Sn142	N176	GCS	Standard	Rigid	Rigid	Free	Free	Free	Free	Rx180.00

Name	Node	System	Type	X	Y	Z	Rx	Ry	Rz	Angle [deg]
Sn143	N202	GCS	Standard	Rigid	Rigid	Free	Free	Free	Free	Rx180.00
Sn144	N228	GCS	Standard	Rigid	Rigid	Free	Free	Free	Free	Rx180.00
Sn145	N254	GCS	Standard	Rigid	Rigid	Free	Free	Free	Free	Rx180.00
Sn146	N280	GCS	Standard	Rigid	Rigid	Free	Free	Free	Free	Rx180.00
Sn147	N22	GCS	Standard	Rigid	Rigid	Free	Free	Free	Free	Rx180.00
Sn148	N48	GCS	Standard	Rigid	Rigid	Free	Free	Free	Free	Rx180.00
Sn149	N74	GCS	Standard	Rigid	Rigid	Free	Free	Free	Free	Rx180.00
Sn150	N100	GCS	Standard	Rigid	Rigid	Free	Free	Free	Free	Rx180.00
Sn151	N126	GCS	Standard	Rigid	Rigid	Free	Free	Free	Free	Rx180.00
Sn152	N152	GCS	Standard	Rigid	Rigid	Free	Free	Free	Free	Rx180.00
Sn153	N178	GCS	Standard	Rigid	Rigid	Free	Free	Free	Free	Rx180.00
Sn154	N204	GCS	Standard	Rigid	Rigid	Free	Free	Free	Free	Rx180.00
Sn155	N230	GCS	Standard	Rigid	Rigid	Free	Free	Free	Free	Rx180.00
Sn156	N256	GCS	Standard	Rigid	Rigid	Free	Free	Free	Free	Rx180.00
Sn157	N282	GCS	Standard	Rigid	Rigid	Free	Free	Free	Free	Rx180.00
Sn158	N1607	GCS	Standard	Rigid	Rigid	Free	Free	Free	Free	Rx180.00
Sn159	N1609	GCS	Standard	Rigid	Rigid	Free	Free	Free	Free	Rx180.00
Sn160	N1611	GCS	Standard	Rigid	Rigid	Free	Free	Free	Free	Rx180.00
Sn161	N1613	GCS	Standard	Rigid	Rigid	Free	Free	Free	Free	Rx180.00
Sn162	N1615	GCS	Standard	Rigid	Rigid	Free	Free	Free	Free	Rx180.00
Sn163	N1617	GCS	Standard	Rigid	Rigid	Free	Free	Free	Free	Rx180.00
Sn164	N1619	GCS	Standard	Rigid	Rigid	Free	Free	Free	Free	Rx180.00
Sn165	N1621	GCS	Standard	Rigid	Rigid	Free	Free	Free	Free	Rx180.00
Sn166	N1623	GCS	Standard	Rigid	Rigid	Free	Free	Free	Free	Rx180.00
Sn167	N1625	GCS	Standard	Rigid	Rigid	Free	Free	Free	Free	Rx180.00
Sn168	N1627	GCS	Standard	Rigid	Rigid	Free	Free	Free	Free	Rx180.00
Sn169	N1805	GCS	Standard	Rigid	Rigid	Free	Free	Free	Free	Rx180.00
Sn170	N1807	GCS	Standard	Rigid	Rigid	Free	Free	Free	Free	Rx180.00
Sn171	N1809	GCS	Standard	Rigid	Rigid	Free	Free	Free	Free	Rx180.00
Sn172	N1811	GCS	Standard	Rigid	Rigid	Free	Free	Free	Free	Rx180.00
Sn173	N1813	GCS	Standard	Rigid	Rigid	Free	Free	Free	Free	Rx180.00
Sn174	N1815	GCS	Standard	Rigid	Rigid	Free	Free	Free	Free	Rx180.00
Sn175	N1817	GCS	Standard	Rigid	Rigid	Free	Free	Free	Free	Rx180.00
Sn176	N1819	GCS	Standard	Rigid	Rigid	Free	Free	Free	Free	Rx180.00
Sn177	N1821	GCS	Standard	Rigid	Rigid	Free	Free	Free	Free	Rx180.00
Sn178	N1823	GCS	Standard	Rigid	Rigid	Free	Free	Free	Free	Rx180.00
Sn179	N1825	GCS	Standard	Rigid	Rigid	Free	Free	Free	Free	Rx180.00
Sn180	N2003	GCS	Standard	Rigid	Rigid	Free	Free	Free	Free	Rx180.00
Sn181	N2005	GCS	Standard	Rigid	Rigid	Free	Free	Free	Free	Rx180.00
Sn182	N2007	GCS	Standard	Rigid	Rigid	Free	Free	Free	Free	Rx180.00
Sn183	N2009	GCS	Standard	Rigid	Rigid	Free	Free	Free	Free	Rx180.00
Sn184	N2011	GCS	Standard	Rigid	Rigid	Free	Free	Free	Free	Rx180.00
Sn185	N2013	GCS	Standard	Rigid	Rigid	Free	Free	Free	Free	Rx180.00
Sn186	N2015	GCS	Standard	Rigid	Rigid	Free	Free	Free	Free	Rx180.00
Sn187	N2017	GCS	Standard	Rigid	Rigid	Free	Free	Free	Free	Rx180.00
Sn188	N2019	GCS	Standard	Rigid	Rigid	Free	Free	Free	Free	Rx180.00
Sn189	N2021	GCS	Standard	Rigid	Rigid	Free	Free	Free	Free	Rx180.00
Sn190	N2023	GCS	Standard	Rigid	Rigid	Free	Free	Free	Free	Rx180.00
Sn191	N2201	GCS	Standard	Rigid	Rigid	Free	Free	Free	Free	Rx180.00
Sn192	N2203	GCS	Standard	Rigid	Rigid	Free	Free	Free	Free	Rx180.00
Sn193	N2205	GCS	Standard	Rigid	Rigid	Free	Free	Free	Free	Rx180.00
Sn194	N2207	GCS	Standard	Rigid	Rigid	Free	Free	Free	Free	Rx180.00
Sn195	N2209	GCS	Standard	Rigid	Rigid	Free	Free	Free	Free	Rx180.00
Sn196	N2211	GCS	Standard	Rigid	Rigid	Free	Free	Free	Free	Rx180.00
Sn197	N2213	GCS	Standard	Rigid	Rigid	Free	Free	Free	Free	Rx180.00
Sn198	N2215	GCS	Standard	Rigid	Rigid	Free	Free	Free	Free	Rx180.00
Sn199	N2217	GCS	Standard	Rigid	Rigid	Free	Free	Free	Free	Rx180.00
Sn200	N2219	GCS	Standard	Rigid	Rigid	Free	Free	Free	Free	Rx180.00
Sn201	N2221	GCS	Standard	Rigid	Rigid	Free	Free	Free	Free	Rx180.00
Sn202	N2399	GCS	Standard	Rigid	Rigid	Free	Free	Free	Free	Rx180.00
Sn203	N2401	GCS	Standard	Rigid	Rigid	Free	Free	Free	Free	Rx180.00
Sn204	N2403	GCS	Standard	Rigid	Rigid	Free	Free	Free	Free	Rx180.00
Sn205	N2405	GCS	Standard	Rigid	Rigid	Free	Free	Free	Free	Rx180.00
Sn206	N2407	GCS	Standard	Rigid	Rigid	Free	Free	Free	Free	Rx180.00
Sn207	N2409	GCS	Standard	Rigid	Rigid	Free	Free	Free	Free	Rx180.00
Sn208	N2411	GCS	Standard	Rigid	Rigid	Free	Free	Free	Free	Rx180.00
Sn209	N2413	GCS	Standard	Rigid	Rigid	Free	Free	Free	Free	Rx180.00
Sn210	N2415	GCS	Standard	Rigid	Rigid	Free	Free	Free	Free	Rx180.00
Sn211	N2417	GCS	Standard	Rigid	Rigid	Free	Free	Free	Free	Rx180.00
Sn212	N2419	GCS	Standard	Rigid	Rigid	Free	Free	Free	Free	Rx180.00
Sn213	N2597	GCS	Standard	Rigid	Rigid	Free	Free	Free	Free	Rx180.00
Sn214	N2599	GCS	Standard	Rigid	Rigid	Free	Free	Free	Free	Rx180.00
Sn215	N2601	GCS	Standard	Rigid	Rigid	Free	Free	Free	Free	Rx180.00
Sn216	N2603	GCS	Standard	Rigid	Rigid	Free	Free	Free	Free	Rx180.00
Sn217	N2605	GCS	Standard	Rigid	Rigid	Free	Free	Free	Free	Rx180.00
Sn218	N2607	GCS	Standard	Rigid	Rigid	Free	Free	Free	Free	Rx180.00
Sn219	N2609	GCS	Standard	Rigid	Rigid	Free	Free	Free	Free	Rx180.00

Name	Node	System	Type	X	Y	Z	Rx	Ry	Rz	Angle [deg]
Sn220	N2611	GCS	Standard	Rigid	Rigid	Free	Free	Free	Free	Rx180.00
Sn221	N2613	GCS	Standard	Rigid	Rigid	Free	Free	Free	Free	Rx180.00
Sn222	N2615	GCS	Standard	Rigid	Rigid	Free	Free	Free	Free	Rx180.00
Sn223	N2617	GCS	Standard	Rigid	Rigid	Free	Free	Free	Free	Rx180.00
Sn224	N2795	GCS	Standard	Rigid	Rigid	Free	Free	Free	Free	Rx180.00
Sn225	N2797	GCS	Standard	Rigid	Rigid	Free	Free	Free	Free	Rx180.00
Sn226	N2799	GCS	Standard	Rigid	Rigid	Free	Free	Free	Free	Rx180.00
Sn227	N2801	GCS	Standard	Rigid	Rigid	Free	Free	Free	Free	Rx180.00
Sn228	N2803	GCS	Standard	Rigid	Rigid	Free	Free	Free	Free	Rx180.00
Sn229	N2805	GCS	Standard	Rigid	Rigid	Free	Free	Free	Free	Rx180.00
Sn230	N2807	GCS	Standard	Rigid	Rigid	Free	Free	Free	Free	Rx180.00
Sn231	N2809	GCS	Standard	Rigid	Rigid	Free	Free	Free	Free	Rx180.00
Sn232	N2811	GCS	Standard	Rigid	Rigid	Free	Free	Free	Free	Rx180.00
Sn233	N2813	GCS	Standard	Rigid	Rigid	Free	Free	Free	Free	Rx180.00
Sn234	N2815	GCS	Standard	Rigid	Rigid	Free	Free	Free	Free	Rx180.00
Sn235	N2993	GCS	Standard	Rigid	Rigid	Free	Free	Free	Free	Rx180.00
Sn236	N2995	GCS	Standard	Rigid	Rigid	Free	Free	Free	Free	Rx180.00
Sn237	N2997	GCS	Standard	Rigid	Rigid	Free	Free	Free	Free	Rx180.00
Sn238	N2999	GCS	Standard	Rigid	Rigid	Free	Free	Free	Free	Rx180.00
Sn239	N3001	GCS	Standard	Rigid	Rigid	Free	Free	Free	Free	Rx180.00
Sn240	N3003	GCS	Standard	Rigid	Rigid	Free	Free	Free	Free	Rx180.00
Sn241	N3005	GCS	Standard	Rigid	Rigid	Free	Free	Free	Free	Rx180.00
Sn242	N3007	GCS	Standard	Rigid	Rigid	Free	Free	Free	Free	Rx180.00
Sn243	N3009	GCS	Standard	Rigid	Rigid	Free	Free	Free	Free	Rx180.00
Sn244	N3011	GCS	Standard	Rigid	Rigid	Free	Free	Free	Free	Rx180.00
Sn245	N3013	GCS	Standard	Rigid	Rigid	Free	Free	Free	Free	Rx180.00
Sn246	N3191	GCS	Standard	Rigid	Rigid	Free	Free	Free	Free	Rx180.00
Sn247	N3193	GCS	Standard	Rigid	Rigid	Free	Free	Free	Free	Rx180.00
Sn248	N3195	GCS	Standard	Rigid	Rigid	Free	Free	Free	Free	Rx180.00
Sn249	N3197	GCS	Standard	Rigid	Rigid	Free	Free	Free	Free	Rx180.00
Sn250	N3199	GCS	Standard	Rigid	Rigid	Free	Free	Free	Free	Rx180.00
Sn251	N3201	GCS	Standard	Rigid	Rigid	Free	Free	Free	Free	Rx180.00
Sn252	N3203	GCS	Standard	Rigid	Rigid	Free	Free	Free	Free	Rx180.00
Sn253	N3205	GCS	Standard	Rigid	Rigid	Free	Free	Free	Free	Rx180.00
Sn254	N3207	GCS	Standard	Rigid	Rigid	Free	Free	Free	Free	Rx180.00
Sn255	N3209	GCS	Standard	Rigid	Rigid	Free	Free	Free	Free	Rx180.00
Sn256	N3211	GCS	Standard	Rigid	Rigid	Free	Free	Free	Free	Rx180.00
Sn257	N3389	GCS	Standard	Rigid	Rigid	Free	Free	Free	Free	Rx180.00
Sn258	N3391	GCS	Standard	Rigid	Rigid	Free	Free	Free	Free	Rx180.00
Sn259	N3393	GCS	Standard	Rigid	Rigid	Free	Free	Free	Free	Rx180.00
Sn260	N3395	GCS	Standard	Rigid	Rigid	Free	Free	Free	Free	Rx180.00
Sn261	N3397	GCS	Standard	Rigid	Rigid	Free	Free	Free	Free	Rx180.00
Sn262	N3399	GCS	Standard	Rigid	Rigid	Free	Free	Free	Free	Rx180.00
Sn263	N3401	GCS	Standard	Rigid	Rigid	Free	Free	Free	Free	Rx180.00
Sn264	N3403	GCS	Standard	Rigid	Rigid	Free	Free	Free	Free	Rx180.00
Sn265	N3405	GCS	Standard	Rigid	Rigid	Free	Free	Free	Free	Rx180.00
Sn266	N3407	GCS	Standard	Rigid	Rigid	Free	Free	Free	Free	Rx180.00
Sn267	N3409	GCS	Standard	Rigid	Rigid	Free	Free	Free	Free	Rx180.00
Sn268	N3587	GCS	Standard	Rigid	Rigid	Free	Free	Free	Free	Rx180.00
Sn269	N3589	GCS	Standard	Rigid	Rigid	Free	Free	Free	Free	Rx180.00
Sn270	N3591	GCS	Standard	Rigid	Rigid	Free	Free	Free	Free	Rx180.00
Sn271	N3593	GCS	Standard	Rigid	Rigid	Free	Free	Free	Free	Rx180.00
Sn272	N3595	GCS	Standard	Rigid	Rigid	Free	Free	Free	Free	Rx180.00
Sn273	N3597	GCS	Standard	Rigid	Rigid	Free	Free	Free	Free	Rx180.00
Sn274	N3599	GCS	Standard	Rigid	Rigid	Free	Free	Free	Free	Rx180.00
Sn275	N3601	GCS	Standard	Rigid	Rigid	Free	Free	Free	Free	Rx180.00
Sn276	N3603	GCS	Standard	Rigid	Rigid	Free	Free	Free	Free	Rx180.00
Sn277	N3605	GCS	Standard	Rigid	Rigid	Free	Free	Free	Free	Rx180.00
Sn278	N3607	GCS	Standard	Rigid	Rigid	Free	Free	Free	Free	Rx180.00
Sn279	N3785	GCS	Standard	Rigid	Rigid	Free	Free	Free	Free	Rx180.00
Sn280	N3787	GCS	Standard	Rigid	Rigid	Free	Free	Free	Free	Rx180.00
Sn281	N3789	GCS	Standard	Rigid	Rigid	Free	Free	Free	Free	Rx180.00
Sn282	N3791	GCS	Standard	Rigid	Rigid	Free	Free	Free	Free	Rx180.00
Sn283	N3793	GCS	Standard	Rigid	Rigid	Free	Free	Free	Free	Rx180.00
Sn284	N3795	GCS	Standard	Rigid	Rigid	Free	Free	Free	Free	Rx180.00
Sn285	N3797	GCS	Standard	Rigid	Rigid	Free	Free	Free	Free	Rx180.00
Sn286	N3799	GCS	Standard	Rigid	Rigid	Free	Free	Free	Free	Rx180.00
Sn287	N3801	GCS	Standard	Rigid	Rigid	Free	Free	Free	Free	Rx180.00
Sn288	N3803	GCS	Standard	Rigid	Rigid	Free	Free	Free	Free	Rx180.00
Sn289	N3805	GCS	Standard	Rigid	Rigid	Free	Free	Free	Free	Rx180.00
Sn290	N3983	GCS	Standard	Rigid	Rigid	Free	Free	Free	Free	Rx180.00
Sn291	N3985	GCS	Standard	Rigid	Rigid	Free	Free	Free	Free	Rx180.00
Sn292	N3987	GCS	Standard	Rigid	Rigid	Free	Free	Free	Free	Rx180.00
Sn293	N3989	GCS	Standard	Rigid	Rigid	Free	Free	Free	Free	Rx180.00
Sn294	N3991	GCS	Standard	Rigid	Rigid	Free	Free	Free	Free	Rx180.00
Sn295	N3993	GCS	Standard	Rigid	Rigid	Free	Free	Free	Free	Rx180.00
Sn296	N3995	GCS	Standard	Rigid	Rigid	Free	Free	Free	Free	Rx180.00

Name	Node	System	Type	X	Y	Z	Rx	Ry	Rz	Angle [deg]
Sn297	N3997	GCS	Standard	Rigid	Rigid	Free	Free	Free	Free	Rx180.00
Sn298	N3999	GCS	Standard	Rigid	Rigid	Free	Free	Free	Free	Rx180.00
Sn299	N4001	GCS	Standard	Rigid	Rigid	Free	Free	Free	Free	Rx180.00
Sn300	N4003	GCS	Standard	Rigid	Rigid	Free	Free	Free	Free	Rx180.00
Sn301	N4181	GCS	Standard	Rigid	Rigid	Free	Free	Free	Free	Rx180.00
Sn302	N4183	GCS	Standard	Rigid	Rigid	Free	Free	Free	Free	Rx180.00
Sn303	N4185	GCS	Standard	Rigid	Rigid	Free	Free	Free	Free	Rx180.00
Sn304	N4187	GCS	Standard	Rigid	Rigid	Free	Free	Free	Free	Rx180.00
Sn305	N4189	GCS	Standard	Rigid	Rigid	Free	Free	Free	Free	Rx180.00
Sn306	N4191	GCS	Standard	Rigid	Rigid	Free	Free	Free	Free	Rx180.00
Sn307	N4193	GCS	Standard	Rigid	Rigid	Free	Free	Free	Free	Rx180.00
Sn308	N4195	GCS	Standard	Rigid	Rigid	Free	Free	Free	Free	Rx180.00
Sn309	N4197	GCS	Standard	Rigid	Rigid	Free	Free	Free	Free	Rx180.00
Sn310	N4199	GCS	Standard	Rigid	Rigid	Free	Free	Free	Free	Rx180.00
Sn311	N4201	GCS	Standard	Rigid	Rigid	Free	Free	Free	Free	Rx180.00
Sn312	N4379	GCS	Standard	Rigid	Rigid	Free	Free	Free	Free	Rx180.00
Sn313	N4381	GCS	Standard	Rigid	Rigid	Free	Free	Free	Free	Rx180.00
Sn314	N4383	GCS	Standard	Rigid	Rigid	Free	Free	Free	Free	Rx180.00
Sn315	N4385	GCS	Standard	Rigid	Rigid	Free	Free	Free	Free	Rx180.00
Sn316	N4387	GCS	Standard	Rigid	Rigid	Free	Free	Free	Free	Rx180.00
Sn317	N4389	GCS	Standard	Rigid	Rigid	Free	Free	Free	Free	Rx180.00
Sn318	N4391	GCS	Standard	Rigid	Rigid	Free	Free	Free	Free	Rx180.00
Sn319	N4393	GCS	Standard	Rigid	Rigid	Free	Free	Free	Free	Rx180.00
Sn320	N4395	GCS	Standard	Rigid	Rigid	Free	Free	Free	Free	Rx180.00
Sn321	N4397	GCS	Standard	Rigid	Rigid	Free	Free	Free	Free	Rx180.00
Sn322	N4399	GCS	Standard	Rigid	Rigid	Free	Free	Free	Free	Rx180.00
Sn323	N4577	GCS	Standard	Rigid	Rigid	Free	Free	Free	Free	Rx180.00
Sn324	N4579	GCS	Standard	Rigid	Rigid	Free	Free	Free	Free	Rx180.00
Sn325	N4581	GCS	Standard	Rigid	Rigid	Free	Free	Free	Free	Rx180.00
Sn326	N4583	GCS	Standard	Rigid	Rigid	Free	Free	Free	Free	Rx180.00
Sn327	N4585	GCS	Standard	Rigid	Rigid	Free	Free	Free	Free	Rx180.00
Sn328	N4587	GCS	Standard	Rigid	Rigid	Free	Free	Free	Free	Rx180.00
Sn329	N4589	GCS	Standard	Rigid	Rigid	Free	Free	Free	Free	Rx180.00
Sn330	N4591	GCS	Standard	Rigid	Rigid	Free	Free	Free	Free	Rx180.00
Sn331	N4593	GCS	Standard	Rigid	Rigid	Free	Free	Free	Free	Rx180.00
Sn332	N4595	GCS	Standard	Rigid	Rigid	Free	Free	Free	Free	Rx180.00
Sn333	N4597	GCS	Standard	Rigid	Rigid	Free	Free	Free	Free	Rx180.00
Sn334	N4775	GCS	Standard	Rigid	Rigid	Free	Free	Free	Free	Rx180.00
Sn335	N4777	GCS	Standard	Rigid	Rigid	Free	Free	Free	Free	Rx180.00
Sn336	N4779	GCS	Standard	Rigid	Rigid	Free	Free	Free	Free	Rx180.00
Sn337	N4781	GCS	Standard	Rigid	Rigid	Free	Free	Free	Free	Rx180.00
Sn338	N4783	GCS	Standard	Rigid	Rigid	Free	Free	Free	Free	Rx180.00
Sn339	N4785	GCS	Standard	Rigid	Rigid	Free	Free	Free	Free	Rx180.00
Sn340	N4787	GCS	Standard	Rigid	Rigid	Free	Free	Free	Free	Rx180.00
Sn341	N4789	GCS	Standard	Rigid	Rigid	Free	Free	Free	Free	Rx180.00
Sn342	N4791	GCS	Standard	Rigid	Rigid	Free	Free	Free	Free	Rx180.00
Sn343	N4793	GCS	Standard	Rigid	Rigid	Free	Free	Free	Free	Rx180.00
Sn344	N4795	GCS	Standard	Rigid	Rigid	Free	Free	Free	Free	Rx180.00
Sn345	N4973	GCS	Standard	Rigid	Rigid	Free	Free	Free	Free	Rx180.00
Sn346	N4975	GCS	Standard	Rigid	Rigid	Free	Free	Free	Free	Rx180.00
Sn347	N4977	GCS	Standard	Rigid	Rigid	Free	Free	Free	Free	Rx180.00
Sn348	N4979	GCS	Standard	Rigid	Rigid	Free	Free	Free	Free	Rx180.00
Sn349	N4981	GCS	Standard	Rigid	Rigid	Free	Free	Free	Free	Rx180.00
Sn350	N4983	GCS	Standard	Rigid	Rigid	Free	Free	Free	Free	Rx180.00
Sn351	N4985	GCS	Standard	Rigid	Rigid	Free	Free	Free	Free	Rx180.00
Sn352	N4987	GCS	Standard	Rigid	Rigid	Free	Free	Free	Free	Rx180.00
Sn353	N4989	GCS	Standard	Rigid	Rigid	Free	Free	Free	Free	Rx180.00
Sn354	N4991	GCS	Standard	Rigid	Rigid	Free	Free	Free	Free	Rx180.00
Sn355	N4993	GCS	Standard	Rigid	Rigid	Free	Free	Free	Free	Rx180.00
Sn356	N5171	GCS	Standard	Rigid	Rigid	Free	Free	Free	Free	Rx180.00
Sn357	N5173	GCS	Standard	Rigid	Rigid	Free	Free	Free	Free	Rx180.00
Sn358	N5175	GCS	Standard	Rigid	Rigid	Free	Free	Free	Free	Rx180.00
Sn359	N5177	GCS	Standard	Rigid	Rigid	Free	Free	Free	Free	Rx180.00
Sn360	N5179	GCS	Standard	Rigid	Rigid	Free	Free	Free	Free	Rx180.00
Sn361	N5181	GCS	Standard	Rigid	Rigid	Free	Free	Free	Free	Rx180.00
Sn362	N5183	GCS	Standard	Rigid	Rigid	Free	Free	Free	Free	Rx180.00
Sn363	N5185	GCS	Standard	Rigid	Rigid	Free	Free	Free	Free	Rx180.00
Sn364	N5187	GCS	Standard	Rigid	Rigid	Free	Free	Free	Free	Rx180.00
Sn365	N5189	GCS	Standard	Rigid	Rigid	Free	Free	Free	Free	Rx180.00
Sn366	N5191	GCS	Standard	Rigid	Rigid	Free	Free	Free	Free	Rx180.00
Sn367	N24	GCS	Standard	Rigid	Rigid	Free	Free	Free	Free	Rx180.00
Sn368	N50	GCS	Standard	Rigid	Rigid	Free	Free	Free	Free	Rx180.00
Sn369	N76	GCS	Standard	Rigid	Rigid	Free	Free	Free	Free	Rx180.00
Sn370	N102	GCS	Standard	Rigid	Rigid	Free	Free	Free	Free	Rx180.00
Sn371	N128	GCS	Standard	Rigid	Rigid	Free	Free	Free	Free	Rx180.00
Sn372	N154	GCS	Standard	Rigid	Rigid	Free	Free	Free	Free	Rx180.00
Sn373	N180	GCS	Standard	Rigid	Rigid	Free	Free	Free	Free	Rx180.00

Name	Node	System	Type	X	Y	Z	Rx	Ry	Rz	Angle [deg]
Sn374	N206	GCS	Standard	Rigid	Rigid	Free	Free	Free	Free	Rx180.00
Sn375	N232	GCS	Standard	Rigid	Rigid	Free	Free	Free	Free	Rx180.00
Sn376	N258	GCS	Standard	Rigid	Rigid	Free	Free	Free	Free	Rx180.00
Sn377	N284	GCS	Standard	Rigid	Rigid	Free	Free	Free	Free	Rx180.00
Sn378	N26	GCS	Standard	Rigid	Rigid	Free	Free	Free	Free	Rx180.00
Sn379	N52	GCS	Standard	Rigid	Rigid	Free	Free	Free	Free	Rx180.00
Sn380	N78	GCS	Standard	Rigid	Rigid	Free	Free	Free	Free	Rx180.00
Sn381	N104	GCS	Standard	Rigid	Rigid	Free	Free	Free	Free	Rx180.00
Sn382	N130	GCS	Standard	Rigid	Rigid	Free	Free	Free	Free	Rx180.00
Sn383	N156	GCS	Standard	Rigid	Rigid	Free	Free	Free	Free	Rx180.00
Sn384	N182	GCS	Standard	Rigid	Rigid	Free	Free	Free	Free	Rx180.00
Sn385	N208	GCS	Standard	Rigid	Rigid	Free	Free	Free	Free	Rx180.00
Sn386	N234	GCS	Standard	Rigid	Rigid	Free	Free	Free	Free	Rx180.00
Sn387	N260	GCS	Standard	Rigid	Rigid	Free	Free	Free	Free	Rx180.00
Sn388	N286	GCS	Standard	Rigid	Rigid	Free	Free	Free	Free	Rx180.00

5. Ayarlanabilir taban plakası

Name	ux	uy	uz	fix	fiy	fiz	Hinge type	Nxk [kN] Mxk [kNm]	Vyk [kN] Myk [kNm]	Vzk [kN] Mzk [kNm]	emax [mm]
HT2	Rigid	Rigid	Rigid	Free	Flexible	Flexible	Base jack	0,000	0,000	0,000	24,150
								0,000	1,410	1,410	

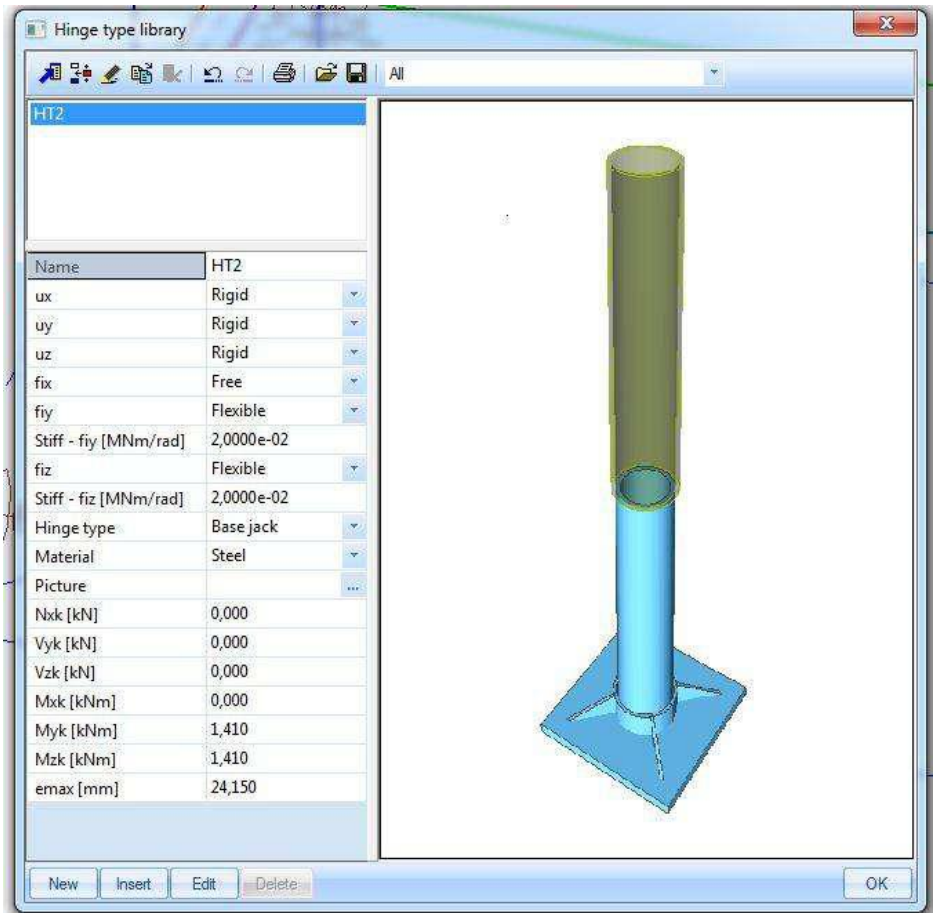

İSKELE PARAMETRELERİ:

KONUMA BAĞLI RÜZGAR ETKİ KATSAYISI Cs : 1

AERODİNAMİK KUVVET KATSAYISI Cf : 1,3

İSKELE BİLEŞENLERİNE AİT REFERANS ALANLAR

Dikme elemanları için: 0.048 m
Yatay elemanlar için : 0,034 m
Diagonel elemanlar için : 0.038 m
Platform elemanı için : 0.4 m

ÇALIŞMA RÜZGAR BASINCI q : 0.2 kn/m2

6. MALZEME BİLGİLERİ

6.1. ÇELİK MALZEMESİ

Steel EC3

Name	Unit mass [kg/m^3]	E mod [MPa] G mod [MPa]	Poisson - nu Thermal exp [m/mK]	Lower limit [mm]	Upper limit [mm]	Fy (range) [MPa]	Fu (range) [MPa]
S 235	7850,0	2,1000e+05	0.3	0,0	40,0	235,0	360,0
		8,0769e+04	0,00	40,0	80,0	215,0	360,0

7. YÜK DURUMLARI

7.1. Zati ağırlıklar (SW)

Profil ağırlıkları program tarafından ölü yük olarak hesaplanmaktadır.

7.2. Servis yükleri (SL)

Yük sınıfı 4 için 3 kN/ m2 Servis yükü olarak tanımlanmıştır. Yükleme 12. kata yarım yük 11. kata tam yük ve 10. kata yarım yük olarak etkitilmiştir.

Serviş dışı durum için yük sınıfı 4 e göre alınan 3 kN/m2 yükün %50 si 11. kata uygulanmıştır.

7.3. Rüzgar yükleri (W)

İskele rüzgar hesap yükleri ;

Maximum rüzgar yükü değeri için aşağıdaki diagram kullanılmıştır.

Name	WP1
Selector switch	×
Input	user
Height / Pressure	0.000000 / 800.000000
	24.000000 / 1100.000000

Drawing

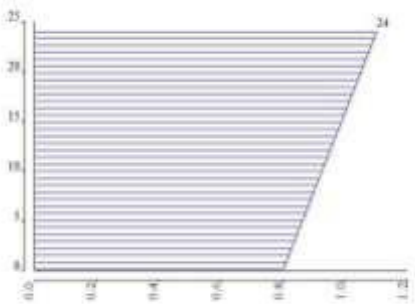

8. YÜK KOMBİNASYONLARI

Name	Type	Load cases	Coeff. [-]
CO1	Linear - ultimate	SW - Zati ağırlık	1,35
		Wy - Rüzgar	0,90
		SL1 - Servis yükü %50 (4)	1,50
CO2	Linear - ultimate	SW - Zati ağırlık	1,35
		Wx - Rüzgar	0,90
		SL1 - Servis yükü %50 (4)	1,50
CO3	Linear - ultimate	SW - Zati ağırlık	1,35
		SL - Servis yükü (4)	1,50
CO4	Linear - ultimate	SW - Zati ağırlık	1,35
		SL - Servis yükü (4)	1,50
		Wy_çalışma - Rüzgar	0,90
CO5	Linear - ultimate	SW - Zati ağırlık	1,35
		SL - Servis yükü (4)	1,50
		Wx_Çalışma - Rüzgar	0,90
CO6	Linear - ultimate	SW - Zati ağırlık	1,35
		SL - Servis yükü (4)	1,05
CO7	Linear - ultimate	SW - Zati ağırlık	1,35
		Wx - Rüzgar	1,00
		SL1 - Servis yükü %50 (4)	1,05
CO8	Linear - ultimate	SW - Zati ağırlık	1,35
		Wy - Rüzgar	1,00
		SL1 - Servis yükü %50 (4)	1,05
CO9	Linear - ultimate	SW - Zati ağırlık	1,35
		SL - Servis yükü (4)	1,05
		Wy_çalışma - Rüzgar	1,00
CO10	Linear - ultimate	SW - Zati ağırlık	1,35
		SL - Servis yükü (4)	1,05
		Wx_Çalışma - Rüzgar	1,00
CO11	Linear - serviceability	SW - Zati ağırlık	1,00
		Wx - Rüzgar	1,00
		SL1 - Servis yükü %50 (4)	1,00
CO12	Linear - serviceability	SW - Zati ağırlık	1,00
		Wy - Rüzgar	1,00
		SL1 - Servis yükü %50 (4)	1,00
CO13	Linear - serviceability	SW - Zati ağırlık	1,00
		SL - Servis yükü (4)	1,00
CO14	Linear - serviceability	SW - Zati ağırlık	1,00
		SL - Servis yükü (4)	1,00
		Wy_çalışma - Rüzgar	1,00
CO15	Linear - serviceability	SW - Zati ağırlık	1,00
		SL - Servis yükü (4)	1,00
		Wx_Çalışma - Rüzgar	1,00

9. Nonlineer Kombinasyonlar

Name	Type	Load cases	Coeff. [-]
NC1	Ultimate	SW - Zati ağırlık	1,35
		Wy - Rüzgar	0,90
		SL1 - Servis yükü %50 (4)	1,50
NC2	Ultimate	SW - Zati ağırlık	1,35
		Wx - Rüzgar	0,90
		SL1 - Servis yükü %50 (4)	1,50
NC3	Ultimate	SW - Zati ağırlık	1,35
		SL - Servis yükü (4)	1,50
NC4	Ultimate	SW - Zati ağırlık	1,35
		SL - Servis yükü (4)	1,50
		Wy_çalışma - Rüzgar	0,90
NC5	Ultimate	SW - Zati ağırlık	1,35
		SL - Servis yükü (4)	1,50
		Wx_Çalışma - Rüzgar	0,90
NC6	Ultimate	SW - Zati ağırlık	1,35
		SL - Servis yükü (4)	1,05
NC7	Ultimate	SW - Zati ağırlık	1,35
		Wx - Rüzgar	1,00
		SL1 - Servis yükü %50 (4)	1,05
NC8	Ultimate	SW - Zati ağırlık	1,35
		Wy - Rüzgar	1,00
		SL1 - Servis yükü %50 (4)	1,05
NC9	Ultimate	SW - Zati ağırlık	1,35
		SL - Servis yükü (4)	1,05
		Wy_çalışma - Rüzgar	1,00
NC10	Ultimate	SW - Zati ağırlık	1,35
		SL - Servis yükü (4)	1,05

Name	Type	Load cases	Coeff. [-]
		Wx_Çalışma - Rüzgar	1,00
NC11	Serviceability	SW - Zati ağırlık	1,00
		Wx - Rüzgar	1,00
		SL1 - Servis yükü %50 (4)	1,00
NC12	Serviceability	SW - Zati ağırlık	1,00
		Wy - Rüzgar	1,00
		SL1 - Servis yükü %50 (4)	1,00
NC13	Serviceability	SW - Zati ağırlık	1,00
		SL - Servis yükü (4)	1,00
NC14	Serviceability	SW - Zati ağırlık	1,00
		SL - Servis yükü (4)	1,00
		Wy_çalışma - Rüzgar	1,00
NC15	Serviceability	SW - Zati ağırlık	1,00
		SL - Servis yükü (4)	1,00
		Wx_Çalışma - Rüzgar	1,00

10. Stability combinations

Name	Load cases	Coeff. [-]
S1	SW - Zati ağırlık	1,35
	Wy - Rüzgar	0,90
	SL1 - Servis yükü %50 (4)	1,50
S1/1 - 2.09		

11. Result classes

Name	Description	List
ULS1	servis durumu	CO3 - Linear - ultimate
		CO4 - Linear - ultimate
		CO5 - Linear - ultimate
		CO6 - Linear - ultimate
		CO9 - Linear - ultimate
		CO10 - Linear - ultimate
All SLS		CO11 - Linear - serviceability
		CO12 - Linear - serviceability
		CO13 - Linear - serviceability
		CO14 - Linear - serviceability
		CO15 - Linear - serviceability
NC ULS		NC1
		NC2
		NC3
		NC4
		NC5
		NC6
		NC7
		NC8
		NC9
		NC10
NC SLS		NC11
		NC12
		NC13
		NC14
		NC15
ULS2	servis dışı	CO1 - Linear - ultimate
		CO2 - Linear - ultimate
		CO7 - Linear - ultimate
		CO8 - Linear - ultimate

12. STANDARTLAR VE KAYNAKLAR

- TS EN 12810-1 "Ön yapımlı bileşenlerden oluşan cephe iskeleleri- bölüm 1 : Mamul özellikleri"
- TS EN 12810-2 "Ön yapımlı bileşenlerden oluşan cephe iskeleleri- bölüm 2 : Özel yapısal tasarım metodları"
- TS EN 12811-1 " Geçici iş donanımları- Bölüm 1 : İş iskeleleri -Performans gerekleri ve genel tasarım"
- TS EN 1993-1-1 " Çelik yapıların projelendirilmesi - Bölüm 1-1 Genel kurallar ve bina kuralları"

13. SİSTEM TASARIMI

İskele sistemi oluşturulan kombinasyonlar altında lineer analizler ile kontrol edilmiştir. Stabilite analizleri yapılarak ikinci mertebe analizine gerek olmadığı görülmüş fakat yine de nonlineer analizler yapılarak ikinci mertebe analizleri ve yapı kusuru da dikkate alınmıştır.

14. YÜK ANALİZİ

14.1. Servis yükü durumu (SL) (SL1)

Servis yüklerinin elemanlara dağılımı aşağıdaki diyagramda gösterilmiştir.

Servis Durumu
Fs = Ay1*3 kN/m2 = 0,30 * 3 kN/m2 = 0,90 / 2 = 0,45 kN/m (Düzgün yayılı yük) 48. ve 50. kat
Fs = Ay1*3 kN/m2 = 0,30 * 3 kN/m2 = 0,90 kN/m (Düzgün yayılı yük) 49. kat
Servis Dışı Durum
Fs =Ay1*0,5*3 kN/m2 = 0,3*1,5 kN/m2=0,45 kN/m (Düzgün yayılı yük) 49. kat

14.2. Rüzgar yükü durumu (W)

Rüzgar yükü dağılımları aşağıdaki diyagramda gösterilmiştir.

Çalışma rüzgar yükü durumu hesap değerleri

F=1*1,3 * 0,048 * 0,2 = 0,01248 kN/m Dikme elemanı için
F=1*1,3 * 0,034 * 0,2 = 0,00876 kN/m Yatay eleman için
F=1*1,3 * 0,038 * 0,2 = 0,01092 kN/m Diagonel elemanı için
F=1*1,3 * 0,4 * 0,2 = 0,104 kN/m Platform elemanı için

Maximum rüzgar

Diagrama girilmiş değerler otomatik olarak hesaplanıp elemanlar üzerine etkitilmiştir.

14.3. Elemanların üzerindeki yükler

Name	Member Load case	Type System	Dir Distribution	Value - P_1 [kN/m] Value - P_2 [kN/m]	Pos x_1 Pos x_2	Coor Loc	Orig	Ecc ey Ecc ez
LF1	PL221	Force	Z	-0,450	0.000	Rela	From start	0,000
	SL - Servis yükü (4)	GCS	Uniform		1.000	Length		0,000
LF2	PL222	Force	Z	-0,450	0.000	Rela	From start	0,000
	SL - Servis yükü (4)	GCS	Uniform		1.000	Length		0,000
LF3	PL223	Force	Z	-0,450	0.000	Rela	From start	0,000
	SL - Servis yükü (4)	GCS	Uniform		1.000	Length		0,000
LF4	PL224	Force	Z	-0,450	0.000	Rela	From start	0,000
	SL - Servis yükü (4)	GCS	Uniform		1.000	Length		0,000
LF5	PL225	Force	Z	-0,450	0.000	Rela	From start	0,000
	SL - Servis yükü (4)	GCS	Uniform		1.000	Length		0,000
LF6	PL226	Force	Z	-0,450	0.000	Rela	From start	0,000
	SL - Servis yükü (4)	GCS	Uniform		1.000	Length		0,000
LF7	PL227	Force	Z	-0,450	0.000	Rela	From start	0,000
	SL - Servis yükü (4)	GCS	Uniform		1.000	Length		0,000
LF8	PL228	Force	Z	-0,450	0.000	Rela	From start	0,000
	SL - Servis yükü (4)	GCS	Uniform		1.000	Length		0,000
LF9	PL229	Force	Z	-0,450	0.000	Rela	From start	0,000
	SL - Servis yükü (4)	GCS	Uniform		1.000	Length		0,000
LF10	PL230	Force	Z	-0,450	0.000	Rela	From start	0,000
	SL - Servis yükü (4)	GCS	Uniform		1.000	Length		0,000
LF11	PL231	Force	Z	-0,450	0.000	Rela	From start	0,000
	SL - Servis yükü (4)	GCS	Uniform		1.000	Length		0,000
LF12	PL232	Force	Z	-0,450	0.000	Rela	From start	0,000
	SL - Servis yükü (4)	GCS	Uniform		1.000	Length		0,000
LF13	PL233	Force	Z	-0,450	0.000	Rela	From start	0,000
	SL - Servis yükü (4)	GCS	Uniform		1.000	Length		0,000
LF14	PL234	Force	Z	-0,450	0.000	Rela	From start	0,000
	SL - Servis yükü (4)	GCS	Uniform		1.000	Length		0,000
LF15	PL235	Force	Z	-0,450	0.000	Rela	From start	0,000
	SL - Servis yükü (4)	GCS	Uniform		1.000	Length		0,000
LF16	PL236	Force	Z	-0,450	0.000	Rela	From start	0,000
	SL - Servis yükü (4)	GCS	Uniform		1.000	Length		0,000
LF17	PL237	Force	Z	-0,450	0.000	Rela	From start	0,000
	SL - Servis yükü (4)	GCS	Uniform		1.000	Length		0,000
LF18	PL238	Force	Z	-0,450	0.000	Rela	From start	0,000
	SL - Servis yükü (4)	GCS	Uniform		1.000	Length		0,000
LF19	PL239	Force	Z	-0,450	0.000	Rela	From start	0,000
	SL - Servis yükü (4)	GCS	Uniform		1.000	Length		0,000
LF20	PL240	Force	Z	-0,450	0.000	Rela	From start	0,000
	SL - Servis yükü (4)	GCS	Uniform		1.000	Length		0,000
LF21	PL181	Force	Z	-0,450	0.000	Rela	From start	0,000
	SL - Servis yükü (4)	GCS	Uniform		1.000	Length		0,000
LF22	PL182	Force	Z	-0,450	0.000	Rela	From start	0,000
	SL - Servis yükü (4)	GCS	Uniform		1.000	Length		0,000

Name	Member Load case	Type System	Dir Distribution	Value - P_1 [kN/m] Value - P_2 [kN/m]	Pos x_1 Pos x_2	Coor Loc	Orig	Ecc ey Ecc ez
LF23	PL183	Force	Z	-0,450	0.000	Rela	From start	0,000
	SL - Servis yükü (4)	GCS	Uniform		1.000	Length		0,000
LF24	PL184	Force	Z	-0,450	0.000	Rela	From start	0,000
	SL - Servis yükü (4)	GCS	Uniform		1.000	Length		0,000
LF25	PL185	Force	Z	-0,450	0.000	Rela	From start	0,000
	SL - Servis yükü (4)	GCS	Uniform		1.000	Length		0,000
LF26	PL186	Force	Z	-0,450	0.000	Rela	From start	0,000
	SL - Servis yükü (4)	GCS	Uniform		1.000	Length		0,000
LF27	PL187	Force	Z	-0,450	0.000	Rela	From start	0,000
	SL - Servis yükü (4)	GCS	Uniform		1.000	Length		0,000
LF28	PL188	Force	Z	-0,450	0.000	Rela	From start	0,000
	SL - Servis yükü (4)	GCS	Uniform		1.000	Length		0,000
LF29	PL189	Force	Z	-0,450	0.000	Rela	From start	0,000
	SL - Servis yükü (4)	GCS	Uniform		1.000	Length		0,000
LF30	PL190	Force	Z	-0,450	0.000	Rela	From start	0,000
	SL - Servis yükü (4)	GCS	Uniform		1.000	Length		0,000
LF31	PL191	Force	Z	-0,450	0.000	Rela	From start	0,000
	SL - Servis yükü (4)	GCS	Uniform		1.000	Length		0,000
LF32	PL192	Force	Z	-0,450	0.000	Rela	From start	0,000
	SL - Servis yükü (4)	GCS	Uniform		1.000	Length		0,000
LF33	PL193	Force	Z	-0,450	0.000	Rela	From start	0,000
	SL - Servis yükü (4)	GCS	Uniform		1.000	Length		0,000
LF34	PL194	Force	Z	-0,450	0.000	Rela	From start	0,000
	SL - Servis yükü (4)	GCS	Uniform		1.000	Length		0,000
LF35	PL195	Force	Z	-0,450	0.000	Rela	From start	0,000
	SL - Servis yükü (4)	GCS	Uniform		1.000	Length		0,000
LF36	PL196	Force	Z	-0,450	0.000	Rela	From start	0,000
	SL - Servis yükü (4)	GCS	Uniform		1.000	Length		0,000
LF37	PL197	Force	Z	-0,450	0.000	Rela	From start	0,000
	SL - Servis yükü (4)	GCS	Uniform		1.000	Length		0,000
LF38	PL198	Force	Z	-0,450	0.000	Rela	From start	0,000
	SL - Servis yükü (4)	GCS	Uniform		1.000	Length		0,000
LF39	PL199	Force	Z	-0,450	0.000	Rela	From start	0,000
	SL - Servis yükü (4)	GCS	Uniform		1.000	Length		0,000
LF40	PL200	Force	Z	-0,450	0.000	Rela	From start	0,000
	SL - Servis yükü (4)	GCS	Uniform		1.000	Length		0,000
LF41	PL201	Force	Z	-0,900	0.000	Rela	From start	0,000
	SL - Servis yükü (4)	GCS	Uniform		1.000	Length		0,000
LF42	PL202	Force	Z	-0,900	0.000	Rela	From start	0,000
	SL - Servis yükü (4)	GCS	Uniform		1.000	Length		0,000
LF43	PL203	Force	Z	-0,900	0.000	Rela	From start	0,000
	SL - Servis yükü (4)	GCS	Uniform		1.000	Length		0,000
LF44	PL204	Force	Z	-0,900	0.000	Rela	From start	0,000
	SL - Servis yükü (4)	GCS	Uniform		1.000	Length		0,000
LF45	PL205	Force	Z	-0,900	0.000	Rela	From start	0,000
	SL - Servis yükü (4)	GCS	Uniform		1.000	Length		0,000
LF46	PL206	Force	Z	-0,900	0.000	Rela	From start	0,000
	SL - Servis yükü (4)	GCS	Uniform		1.000	Length		0,000
LF47	PL207	Force	Z	-0,900	0.000	Rela	From start	0,000
	SL - Servis yükü (4)	GCS	Uniform		1.000	Length		0,000
LF48	PL208	Force	Z	-0,900	0.000	Rela	From start	0,000
	SL - Servis yükü (4)	GCS	Uniform		1.000	Length		0,000
LF49	PL209	Force	Z	-0,900	0.000	Rela	From start	0,000
	SL - Servis yükü (4)	GCS	Uniform		1.000	Length		0,000
LF50	PL210	Force	Z	-0,900	0.000	Rela	From start	0,000
	SL - Servis yükü (4)	GCS	Uniform		1.000	Length		0,000
LF51	PL211	Force	Z	-0,900	0.000	Rela	From start	0,000
	SL - Servis yükü (4)	GCS	Uniform		1.000	Length		0,000
LF52	PL212	Force	Z	-0,900	0.000	Rela	From start	0,000
	SL - Servis yükü (4)	GCS	Uniform		1.000	Length		0,000
LF53	PL213	Force	Z	-0,900	0.000	Rela	From start	0,000
	SL - Servis yükü (4)	GCS	Uniform		1.000	Length		0,000
LF54	PL214	Force	Z	-0,900	0.000	Rela	From start	0,000
	SL - Servis yükü (4)	GCS	Uniform		1.000	Length		0,000
LF55	PL215	Force	Z	-0,900	0.000	Rela	From start	0,000
	SL - Servis yükü (4)	GCS	Uniform		1.000	Length		0,000
LF56	PL216	Force	Z	-0,900	0.000	Rela	From start	0,000
	SL - Servis yükü (4)	GCS	Uniform		1.000	Length		0,000
LF57	PL217	Force	Z	-0,900	0.000	Rela	From start	0,000
	SL - Servis yükü (4)	GCS	Uniform		1.000	Length		0,000
LF58	PL218	Force	Z	-0,900	0.000	Rela	From start	0,000
	SL - Servis yükü (4)	GCS	Uniform		1.000	Length		0,000
LF59	PL219	Force	Z	-0,900	0.000	Rela	From start	0,000
	SL - Servis yükü (4)	GCS	Uniform		1.000	Length		0,000

Name	Member Load case	Type System	Dir Distribution	Value - P_1 [kN/m] Value - P_2 [kN/m]	Pos x_1 Pos x_2	Coor Loc	Orig	Ecc ey Ecc ez
LF60	PL220	Force	Z	-0,900	0.000	Rela	From start	0,000
	SL - Servis yükü (4)	GCS	Uniform		1.000	Length		0,000
LF61	B12	Wind	Y	0,069	0.000	Rela	From start	0,000
	Wy - Rüzgar	GCS	Uniform	0,069	1.000	Length		0,000
LF62	B11	Wind	Y	0,069	0.000	Rela	From start	0,000
	Wy - Rüzgar	GCS	Uniform	0,069	1.000	Length		0,000
LF63	B10	Wind	Y	0,069	0.000	Rela	From start	0,000
	Wy - Rüzgar	GCS	Uniform	0,069	1.000	Length		0,000
LF64	B9	Wind	Y	0,062	0.000	Rela	From start	0,000
	Wy - Rüzgar	GCS	Uniform	0,064	1.000	Length		0,000
LF65	B8	Wind	Y	0,061	0.000	Rela	From start	0,000
	Wy - Rüzgar	GCS	Uniform	0,062	1.000	Length		0,000
LF66	B7	Wind	Y	0,059	0.000	Rela	From start	0,000
	Wy - Rüzgar	GCS	Uniform	0,061	1.000	Length		0,000
LF67	B6	Wind	Y	0,058	0.000	Rela	From start	0,000
	Wy - Rüzgar	GCS	Uniform	0,059	1.000	Length		0,000
LF68	B5	Wind	Y	0,056	0.000	Rela	From start	0,000
	Wy - Rüzgar	GCS	Uniform	0,058	1.000	Length		0,000
LF69	B4	Wind	Y	0,055	0.000	Rela	From start	0,000
	Wy - Rüzgar	GCS	Uniform	0,056	1.000	Length		0,000
LF70	B3	Wind	Y	0,053	0.000	Rela	From start	0,000
	Wy - Rüzgar	GCS	Uniform	0,055	1.000	Length		0,000
LF71	B2	Wind	Y	0,051	0.000	Rela	From start	0,000
	Wy - Rüzgar	GCS	Uniform	0,053	1.000	Length		0,000
LF72	B1	Wind	Y	0,050	0.000	Rela	From start	0,000
	Wy - Rüzgar	GCS	Uniform	0,051	1.000	Length		0,000
LF73	B25	Wind	Y	0,050	0.000	Rela	From start	0,000
	Wy - Rüzgar	GCS	Uniform	0,051	1.000	Length		0,000
LF74	B26	Wind	Y	0,051	0.000	Rela	From start	0,000
	Wy - Rüzgar	GCS	Uniform	0,053	1.000	Length		0,000
LF75	B27	Wind	Y	0,053	0.000	Rela	From start	0,000
	Wy - Rüzgar	GCS	Uniform	0,055	1.000	Length		0,000
LF76	B28	Wind	Y	0,055	0.000	Rela	From start	0,000
	Wy - Rüzgar	GCS	Uniform	0,056	1.000	Length		0,000
LF77	B29	Wind	Y	0,056	0.000	Rela	From start	0,000
	Wy - Rüzgar	GCS	Uniform	0,058	1.000	Length		0,000
LF78	B30	Wind	Y	0,058	0.000	Rela	From start	0,000
	Wy - Rüzgar	GCS	Uniform	0,059	1.000	Length		0,000
LF79	B31	Wind	Y	0,059	0.000	Rela	From start	0,000
	Wy - Rüzgar	GCS	Uniform	0,061	1.000	Length		0,000
LF80	B32	Wind	Y	0,061	0.000	Rela	From start	0,000
	Wy - Rüzgar	GCS	Uniform	0,062	1.000	Length		0,000
LF81	B33	Wind	Y	0,062	0.000	Rela	From start	0,000
	Wy - Rüzgar	GCS	Uniform	0,064	1.000	Length		0,000
LF82	B34	Wind	Y	0,069	0.000	Rela	From start	0,000
	Wy - Rüzgar	GCS	Uniform	0,069	1.000	Length		0,000
LF83	B35	Wind	Y	0,069	0.000	Rela	From start	0,000
	Wy - Rüzgar	GCS	Uniform	0,069	1.000	Length		0,000
LF84	B36	Wind	Y	0,069	0.000	Rela	From start	0,000
	Wy - Rüzgar	GCS	Uniform	0,069	1.000	Length		0,000
LF85	B60	Wind	Y	0,069	0.000	Rela	From start	0,000
	Wy - Rüzgar	GCS	Uniform	0,069	1.000	Length		0,000
LF86	B84	Wind	Y	0,069	0.000	Rela	From start	0,000
	Wy - Rüzgar	GCS	Uniform	0,069	1.000	Length		0,000
LF87	B108	Wind	Y	0,069	0.000	Rela	From start	0,000
	Wy - Rüzgar	GCS	Uniform	0,069	1.000	Length		0,000
LF88	B132	Wind	Y	0,069	0.000	Rela	From start	0,000
	Wy - Rüzgar	GCS	Uniform	0,069	1.000	Length		0,000
LF89	B156	Wind	Y	0,069	0.000	Rela	From start	0,000
	Wy - Rüzgar	GCS	Uniform	0,069	1.000	Length		0,000
LF90	B180	Wind	Y	0,069	0.000	Rela	From start	0,000
	Wy - Rüzgar	GCS	Uniform	0,069	1.000	Length		0,000
LF91	B468	Wind	Y	0,069	0.000	Rela	From start	0,000
	Wy - Rüzgar	GCS	Uniform	0,069	1.000	Length		0,000
LF92	B528	Wind	Y	0,069	0.000	Rela	From start	0,000
	Wy - Rüzgar	GCS	Uniform	0,069	1.000	Length		0,000
LF93	B588	Wind	Y	0,069	0.000	Rela	From start	0,000
	Wy - Rüzgar	GCS	Uniform	0,069	1.000	Length		0,000
LF96	B59	Wind	Y	0,069	0.000	Rela	From start	0,000
	Wy - Rüzgar	GCS	Uniform	0,069	1.000	Length		0,000
LF97	B83	Wind	Y	0,069	0.000	Rela	From start	0,000
	Wy - Rüzgar	GCS	Uniform	0,069	1.000	Length		0,000
LF98	B107	Wind	Y	0,069	0.000	Rela	From start	0,000
	Wy - Rüzgar	GCS	Uniform	0,069	1.000	Length		0,000

Name	Member Load case	Type System	Dir Distribution	Value - P_1 [kN/m] Value - P_2 [kN/m]	Pos x_1 Pos x_2	Coor Loc	Orig	Ecc ey Ecc ez
LF99	B131	Wind	Y	0,069	0.000	Rela	From start	0,000
	Wy - Rüzgar	GCS	Uniform	0,069	1.000	Length		0,000
LF100	B155	Wind	Y	0,069	0.000	Rela	From start	0,000
	Wy - Rüzgar	GCS	Uniform	0,069	1.000	Length		0,000
LF101	B179	Wind	Y	0,069	0.000	Rela	From start	0,000
	Wy - Rüzgar	GCS	Uniform	0,069	1.000	Length		0,000
LF102	B467	Wind	Y	0,069	0.000	Rela	From start	0,000
	Wy - Rüzgar	GCS	Uniform	0,069	1.000	Length		0,000
LF103	B527	Wind	Y	0,069	0.000	Rela	From start	0,000
	Wy - Rüzgar	GCS	Uniform	0,069	1.000	Length		0,000
LF104	B587	Wind	Y	0,069	0.000	Rela	From start	0,000
	Wy - Rüzgar	GCS	Uniform	0,069	1.000	Length		0,000
LF107	B58	Wind	Y	0,069	0.000	Rela	From start	0,000
	Wy - Rüzgar	GCS	Uniform	0,069	1.000	Length		0,000
LF108	B82	Wind	Y	0,069	0.000	Rela	From start	0,000
	Wy - Rüzgar	GCS	Uniform	0,069	1.000	Length		0,000
LF109	B106	Wind	Y	0,069	0.000	Rela	From start	0,000
	Wy - Rüzgar	GCS	Uniform	0,069	1.000	Length		0,000
LF110	B130	Wind	Y	0,069	0.000	Rela	From start	0,000
	Wy - Rüzgar	GCS	Uniform	0,069	1.000	Length		0,000
LF111	B154	Wind	Y	0,069	0.000	Rela	From start	0,000
	Wy - Rüzgar	GCS	Uniform	0,069	1.000	Length		0,000
LF112	B178	Wind	Y	0,069	0.000	Rela	From start	0,000
	Wy - Rüzgar	GCS	Uniform	0,069	1.000	Length		0,000
LF113	B466	Wind	Y	0,069	0.000	Rela	From start	0,000
	Wy - Rüzgar	GCS	Uniform	0,069	1.000	Length		0,000
LF114	B526	Wind	Y	0,069	0.000	Rela	From start	0,000
	Wy - Rüzgar	GCS	Uniform	0,069	1.000	Length		0,000
LF115	B586	Wind	Y	0,069	0.000	Rela	From start	0,000
	Wy - Rüzgar	GCS	Uniform	0,069	1.000	Length		0,000
LF118	B57	Wind	Y	0,062	0.000	Rela	From start	0,000
	Wy - Rüzgar	GCS	Uniform	0,064	1.000	Length		0,000
LF119	B81	Wind	Y	0,062	0.000	Rela	From start	0,000
	Wy - Rüzgar	GCS	Uniform	0,064	1.000	Length		0,000
LF120	B105	Wind	Y	0,062	0.000	Rela	From start	0,000
	Wy - Rüzgar	GCS	Uniform	0,064	1.000	Length		0,000
LF121	B129	Wind	Y	0,062	0.000	Rela	From start	0,000
	Wy - Rüzgar	GCS	Uniform	0,064	1.000	Length		0,000
LF122	B153	Wind	Y	0,062	0.000	Rela	From start	0,000
	Wy - Rüzgar	GCS	Uniform	0,064	1.000	Length		0,000
LF123	B177	Wind	Y	0,062	0.000	Rela	From start	0,000
	Wy - Rüzgar	GCS	Uniform	0,064	1.000	Length		0,000
LF124	B465	Wind	Y	0,062	0.000	Rela	From start	0,000
	Wy - Rüzgar	GCS	Uniform	0,064	1.000	Length		0,000
LF125	B525	Wind	Y	0,062	0.000	Rela	From start	0,000
	Wy - Rüzgar	GCS	Uniform	0,064	1.000	Length		0,000
LF126	B585	Wind	Y	0,062	0.000	Rela	From start	0,000
	Wy - Rüzgar	GCS	Uniform	0,064	1.000	Length		0,000
LF129	B56	Wind	Y	0,061	0.000	Rela	From start	0,000
	Wy - Rüzgar	GCS	Uniform	0,062	1.000	Length		0,000
LF130	B80	Wind	Y	0,061	0.000	Rela	From start	0,000
	Wy - Rüzgar	GCS	Uniform	0,062	1.000	Length		0,000
LF131	B104	Wind	Y	0,061	0.000	Rela	From start	0,000
	Wy - Rüzgar	GCS	Uniform	0,062	1.000	Length		0,000
LF132	B128	Wind	Y	0,061	0.000	Rela	From start	0,000
	Wy - Rüzgar	GCS	Uniform	0,062	1.000	Length		0,000
LF133	B152	Wind	Y	0,061	0.000	Rela	From start	0,000
	Wy - Rüzgar	GCS	Uniform	0,062	1.000	Length		0,000
LF134	B176	Wind	Y	0,061	0.000	Rela	From start	0,000
	Wy - Rüzgar	GCS	Uniform	0,062	1.000	Length		0,000
LF135	B464	Wind	Y	0,061	0.000	Rela	From start	0,000
	Wy - Rüzgar	GCS	Uniform	0,062	1.000	Length		0,000
LF136	B524	Wind	Y	0,061	0.000	Rela	From start	0,000
	Wy - Rüzgar	GCS	Uniform	0,062	1.000	Length		0,000
LF137	B584	Wind	Y	0,061	0.000	Rela	From start	0,000
	Wy - Rüzgar	GCS	Uniform	0,062	1.000	Length		0,000
LF140	B55	Wind	Y	0,059	0.000	Rela	From start	0,000
	Wy - Rüzgar	GCS	Uniform	0,061	1.000	Length		0,000
LF141	B79	Wind	Y	0,059	0.000	Rela	From start	0,000
	Wy - Rüzgar	GCS	Uniform	0,061	1.000	Length		0,000
LF142	B103	Wind	Y	0,059	0.000	Rela	From start	0,000
	Wy - Rüzgar	GCS	Uniform	0,061	1.000	Length		0,000
LF143	B127	Wind	Y	0,059	0.000	Rela	From start	0,000
	Wy - Rüzgar	GCS	Uniform	0,061	1.000	Length		0,000

Name	Member Load case	Type System	Dir Distribution	Value - P_1 [kN/m] Value - P_2 [kN/m]	Pos x_1 Pos x_2	Coor Loc	Orig	Ecc ey Ecc ez
LF144	B151	Wind	Y	0,059	0.000	Rela	From start	0,000
	Wy - Rüzgar	GCS	Uniform	0,061	1.000	Length		0,000
LF145	B175	Wind	Y	0,059	0.000	Rela	From start	0,000
	Wy - Rüzgar	GCS	Uniform	0,061	1.000	Length		0,000
LF146	B463	Wind	Y	0,059	0.000	Rela	From start	0,000
	Wy - Rüzgar	GCS	Uniform	0,061	1.000	Length		0,000
LF147	B523	Wind	Y	0,059	0.000	Rela	From start	0,000
	Wy - Rüzgar	GCS	Uniform	0,061	1.000	Length		0,000
LF148	B583	Wind	Y	0,059	0.000	Rela	From start	0,000
	Wy - Rüzgar	GCS	Uniform	0,061	1.000	Length		0,000
LF151	B54	Wind	Y	0,058	0.000	Rela	From start	0,000
	Wy - Rüzgar	GCS	Uniform	0,059	1.000	Length		0,000
LF152	B78	Wind	Y	0,058	0.000	Rela	From start	0,000
	Wy - Rüzgar	GCS	Uniform	0,059	1.000	Length		0,000
LF153	B102	Wind	Y	0,058	0.000	Rela	From start	0,000
	Wy - Rüzgar	GCS	Uniform	0,059	1.000	Length		0,000
LF154	B126	Wind	Y	0,058	0.000	Rela	From start	0,000
	Wy - Rüzgar	GCS	Uniform	0,059	1.000	Length		0,000
LF155	B150	Wind	Y	0,058	0.000	Rela	From start	0,000
	Wy - Rüzgar	GCS	Uniform	0,059	1.000	Length		0,000
LF156	B174	Wind	Y	0,058	0.000	Rela	From start	0,000
	Wy - Rüzgar	GCS	Uniform	0,059	1.000	Length		0,000
LF157	B462	Wind	Y	0,058	0.000	Rela	From start	0,000
	Wy - Rüzgar	GCS	Uniform	0,059	1.000	Length		0,000
LF158	B522	Wind	Y	0,058	0.000	Rela	From start	0,000
	Wy - Rüzgar	GCS	Uniform	0,059	1.000	Length		0,000
LF159	B582	Wind	Y	0,058	0.000	Rela	From start	0,000
	Wy - Rüzgar	GCS	Uniform	0,059	1.000	Length		0,000
LF162	B53	Wind	Y	0,056	0.000	Rela	From start	0,000
	Wy - Rüzgar	GCS	Uniform	0,058	1.000	Length		0,000
LF163	B77	Wind	Y	0,056	0.000	Rela	From start	0,000
	Wy - Rüzgar	GCS	Uniform	0,058	1.000	Length		0,000
LF164	B101	Wind	Y	0,056	0.000	Rela	From start	0,000
	Wy - Rüzgar	GCS	Uniform	0,058	1.000	Length		0,000
LF165	B125	Wind	Y	0,056	0.000	Rela	From start	0,000
	Wy - Rüzgar	GCS	Uniform	0,058	1.000	Length		0,000
LF166	B149	Wind	Y	0,056	0.000	Rela	From start	0,000
	Wy - Rüzgar	GCS	Uniform	0,058	1.000	Length		0,000
LF167	B173	Wind	Y	0,056	0.000	Rela	From start	0,000
	Wy - Rüzgar	GCS	Uniform	0,058	1.000	Length		0,000
LF168	B461	Wind	Y	0,056	0.000	Rela	From start	0,000
	Wy - Rüzgar	GCS	Uniform	0,058	1.000	Length		0,000
LF169	B521	Wind	Y	0,056	0.000	Rela	From start	0,000
	Wy - Rüzgar	GCS	Uniform	0,058	1.000	Length		0,000
LF170	B581	Wind	Y	0,056	0.000	Rela	From start	0,000
	Wy - Rüzgar	GCS	Uniform	0,058	1.000	Length		0,000
LF173	B52	Wind	Y	0,055	0.000	Rela	From start	0,000
	Wy - Rüzgar	GCS	Uniform	0,056	1.000	Length		0,000
LF174	B76	Wind	Y	0,055	0.000	Rela	From start	0,000
	Wy - Rüzgar	GCS	Uniform	0,056	1.000	Length		0,000
LF175	B100	Wind	Y	0,055	0.000	Rela	From start	0,000
	Wy - Rüzgar	GCS	Uniform	0,056	1.000	Length		0,000
LF176	B124	Wind	Y	0,055	0.000	Rela	From start	0,000
	Wy - Rüzgar	GCS	Uniform	0,056	1.000	Length		0,000
LF177	B148	Wind	Y	0,055	0.000	Rela	From start	0,000
	Wy - Rüzgar	GCS	Uniform	0,056	1.000	Length		0,000
LF178	B172	Wind	Y	0,055	0.000	Rela	From start	0,000
	Wy - Rüzgar	GCS	Uniform	0,056	1.000	Length		0,000
LF179	B460	Wind	Y	0,055	0.000	Rela	From start	0,000
	Wy - Rüzgar	GCS	Uniform	0,056	1.000	Length		0,000
LF180	B520	Wind	Y	0,055	0.000	Rela	From start	0,000
	Wy - Rüzgar	GCS	Uniform	0,056	1.000	Length		0,000
LF181	B580	Wind	Y	0,055	0.000	Rela	From start	0,000
	Wy - Rüzgar	GCS	Uniform	0,056	1.000	Length		0,000
LF184	B51	Wind	Y	0,053	0.000	Rela	From start	0,000
	Wy - Rüzgar	GCS	Uniform	0,055	1.000	Length		0,000
LF185	B75	Wind	Y	0,053	0.000	Rela	From start	0,000
	Wy - Rüzgar	GCS	Uniform	0,055	1.000	Length		0,000
LF186	B99	Wind	Y	0,053	0.000	Rela	From start	0,000
	Wy - Rüzgar	GCS	Uniform	0,055	1.000	Length		0,000
LF187	B123	Wind	Y	0,053	0.000	Rela	From start	0,000
	Wy - Rüzgar	GCS	Uniform	0,055	1.000	Length		0,000
LF188	B147	Wind	Y	0,053	0.000	Rela	From start	0,000
	Wy - Rüzgar	GCS	Uniform	0,055	1.000	Length		0,000

Name	Member Load case	Type System	Dir Distribution	Value - P_1 [kN/m] Value - P_2 [kN/m]	Pos x_1 Pos x_2	Coor Loc	Orig	Ecc ey Ecc ez
LF189	B171	Wind	Y	0,053	0.000	Rela	From start	0,000
	Wy - Rüzgar	GCS	Uniform	0,055	1.000	Length		0,000
LF190	B459	Wind	Y	0,053	0.000	Rela	From start	0,000
	Wy - Rüzgar	GCS	Uniform	0,055	1.000	Length		0,000
LF191	B519	Wind	Y	0,053	0.000	Rela	From start	0,000
	Wy - Rüzgar	GCS	Uniform	0,055	1.000	Length		0,000
LF192	B579	Wind	Y	0,053	0.000	Rela	From start	0,000
	Wy - Rüzgar	GCS	Uniform	0,055	1.000	Length		0,000
LF193	CP2	Wind	Y	0,042	0.000	Rela	From start	0,000
	Wy - Rüzgar	GCS	Uniform	0,043	1.000	Length		0,000
LF195	B50	Wind	Y	0,051	0.000	Rela	From start	0,000
	Wy - Rüzgar	GCS	Uniform	0,053	1.000	Length		0,000
LF196	B74	Wind	Y	0,051	0.000	Rela	From start	0,000
	Wy - Rüzgar	GCS	Uniform	0,053	1.000	Length		0,000
LF197	B98	Wind	Y	0,051	0.000	Rela	From start	0,000
	Wy - Rüzgar	GCS	Uniform	0,053	1.000	Length		0,000
LF198	B122	Wind	Y	0,051	0.000	Rela	From start	0,000
	Wy - Rüzgar	GCS	Uniform	0,053	1.000	Length		0,000
LF199	B146	Wind	Y	0,051	0.000	Rela	From start	0,000
	Wy - Rüzgar	GCS	Uniform	0,053	1.000	Length		0,000
LF200	B170	Wind	Y	0,051	0.000	Rela	From start	0,000
	Wy - Rüzgar	GCS	Uniform	0,053	1.000	Length		0,000
LF201	B458	Wind	Y	0,051	0.000	Rela	From start	0,000
	Wy - Rüzgar	GCS	Uniform	0,053	1.000	Length		0,000
LF202	B518	Wind	Y	0,051	0.000	Rela	From start	0,000
	Wy - Rüzgar	GCS	Uniform	0,053	1.000	Length		0,000
LF203	B578	Wind	Y	0,051	0.000	Rela	From start	0,000
	Wy - Rüzgar	GCS	Uniform	0,053	1.000	Length		0,000
LF206	B49	Wind	Y	0,050	0.000	Rela	From start	0,000
	Wy - Rüzgar	GCS	Uniform	0,051	1.000	Length		0,000
LF207	B73	Wind	Y	0,050	0.000	Rela	From start	0,000
	Wy - Rüzgar	GCS	Uniform	0,051	1.000	Length		0,000
LF208	B97	Wind	Y	0,050	0.000	Rela	From start	0,000
	Wy - Rüzgar	GCS	Uniform	0,051	1.000	Length		0,000
LF209	B121	Wind	Y	0,050	0.000	Rela	From start	0,000
	Wy - Rüzgar	GCS	Uniform	0,051	1.000	Length		0,000
LF210	B145	Wind	Y	0,050	0.000	Rela	From start	0,000
	Wy - Rüzgar	GCS	Uniform	0,051	1.000	Length		0,000
LF211	B169	Wind	Y	0,050	0.000	Rela	From start	0,000
	Wy - Rüzgar	GCS	Uniform	0,051	1.000	Length		0,000
LF212	B457	Wind	Y	0,050	0.000	Rela	From start	0,000
	Wy - Rüzgar	GCS	Uniform	0,051	1.000	Length		0,000
LF213	B517	Wind	Y	0,050	0.000	Rela	From start	0,000
	Wy - Rüzgar	GCS	Uniform	0,051	1.000	Length		0,000
LF214	B577	Wind	Y	0,050	0.000	Rela	From start	0,000
	Wy - Rüzgar	GCS	Uniform	0,051	1.000	Length		0,000
LF215	CP12	Wind	Y	0,041	0.000	Rela	From start	0,000
	Wy - Rüzgar	GCS	Uniform	0,040	1.000	Length		0,000
LF217	B1068	Wind	Y	0,048	0.000	Rela	From start	0,000
	Wy - Rüzgar	GCS	Uniform	0,048	1.000	Length		0,000
LF218	B1069	Wind	Y	0,048	0.000	Rela	From start	0,000
	Wy - Rüzgar	GCS	Uniform	0,048	1.000	Length		0,000
LF219	B1070	Wind	Y	0,048	0.000	Rela	From start	0,000
	Wy - Rüzgar	GCS	Uniform	0,048	1.000	Length		0,000
LF220	B1071	Wind	Y	0,048	0.000	Rela	From start	0,000
	Wy - Rüzgar	GCS	Uniform	0,048	1.000	Length		0,000
LF221	B1072	Wind	Y	0,048	0.000	Rela	From start	0,000
	Wy - Rüzgar	GCS	Uniform	0,048	1.000	Length		0,000
LF222	B1073	Wind	Y	0,048	0.000	Rela	From start	0,000
	Wy - Rüzgar	GCS	Uniform	0,048	1.000	Length		0,000
LF223	B1074	Wind	Y	0,048	0.000	Rela	From start	0,000
	Wy - Rüzgar	GCS	Uniform	0,048	1.000	Length		0,000
LF224	B1075	Wind	Y	0,048	0.000	Rela	From start	0,000
	Wy - Rüzgar	GCS	Uniform	0,048	1.000	Length		0,000
LF225	B1076	Wind	Y	0,048	0.000	Rela	From start	0,000
	Wy - Rüzgar	GCS	Uniform	0,048	1.000	Length		0,000
LF226	B1077	Wind	Y	0,048	0.000	Rela	From start	0,000
	Wy - Rüzgar	GCS	Uniform	0,048	1.000	Length		0,000
LF227	B1078	Wind	Y	0,048	0.000	Rela	From start	0,000
	Wy - Rüzgar	GCS	Uniform	0,048	1.000	Length		0,000
LF228	B1079	Wind	Y	0,048	0.000	Rela	From start	0,000
	Wy - Rüzgar	GCS	Uniform	0,048	1.000	Length		0,000
LF229	B1080	Wind	Y	0,048	0.000	Rela	From start	0,000
	Wy - Rüzgar	GCS	Uniform	0,048	1.000	Length		0,000

Name	Member Load case	Type System	Dir Distribution	Value - P_1 [kN/m] Value - P_2 [kN/m]	Pos x_1 Pos x_2	Coor Loc	Orig	Ecc ey Ecc ez
LF230	B1081	Wind	Y	0,048	0.000	Rela	From start	0,000
	Wy - Rüzgar	GCS	Uniform	0,048	1.000	Length		0,000
LF231	B1082	Wind	Y	0,048	0.000	Rela	From start	0,000
	Wy - Rüzgar	GCS	Uniform	0,048	1.000	Length		0,000
LF232	B1083	Wind	Y	0,048	0.000	Rela	From start	0,000
	Wy - Rüzgar	GCS	Uniform	0,048	1.000	Length		0,000
LF233	B1084	Wind	Y	0,048	0.000	Rela	From start	0,000
	Wy - Rüzgar	GCS	Uniform	0,048	1.000	Length		0,000
LF234	B1085	Wind	Y	0,048	0.000	Rela	From start	0,000
	Wy - Rüzgar	GCS	Uniform	0,048	1.000	Length		0,000
LF235	B1086	Wind	Y	0,048	0.000	Rela	From start	0,000
	Wy - Rüzgar	GCS	Uniform	0,048	1.000	Length		0,000
LF236	B1087	Wind	Y	0,048	0.000	Rela	From start	0,000
	Wy - Rüzgar	GCS	Uniform	0,048	1.000	Length		0,000
LF237	B1066	Wind	Y	0,048	0.000	Rela	From start	0,000
	Wy - Rüzgar	GCS	Uniform	0,048	1.000	Length		0,000
LF238	B1067	Wind	Y	0,048	0.000	Rela	From start	0,000
	Wy - Rüzgar	GCS	Uniform	0,048	1.000	Length		0,000
LF239	B1064	Wind	Y	0,048	0.000	Rela	From start	0,000
	Wy - Rüzgar	GCS	Uniform	0,048	1.000	Length		0,000
LF240	B1065	Wind	Y	0,048	0.000	Rela	From start	0,000
	Wy - Rüzgar	GCS	Uniform	0,048	1.000	Length		0,000
LF241	B1062	Wind	Y	0,048	0.000	Rela	From start	0,000
	Wy - Rüzgar	GCS	Uniform	0,048	1.000	Length		0,000
LF242	B1063	Wind	Y	0,048	0.000	Rela	From start	0,000
	Wy - Rüzgar	GCS	Uniform	0,048	1.000	Length		0,000
LF243	B1060	Wind	Y	0,048	0.000	Rela	From start	0,000
	Wy - Rüzgar	GCS	Uniform	0,048	1.000	Length		0,000
LF244	B1061	Wind	Y	0,048	0.000	Rela	From start	0,000
	Wy - Rüzgar	GCS	Uniform	0,048	1.000	Length		0,000
LF245	B1058	Wind	Y	0,048	0.000	Rela	From start	0,000
	Wy - Rüzgar	GCS	Uniform	0,048	1.000	Length		0,000
LF246	B1059	Wind	Y	0,048	0.000	Rela	From start	0,000
	Wy - Rüzgar	GCS	Uniform	0,048	1.000	Length		0,000
LF247	B1056	Wind	Y	0,048	0.000	Rela	From start	0,000
	Wy - Rüzgar	GCS	Uniform	0,048	1.000	Length		0,000
LF248	B1057	Wind	Y	0,048	0.000	Rela	From start	0,000
	Wy - Rüzgar	GCS	Uniform	0,048	1.000	Length		0,000
LF249	B1054	Wind	Y	0,048	0.000	Rela	From start	0,000
	Wy - Rüzgar	GCS	Uniform	0,048	1.000	Length		0,000
LF250	B1055	Wind	Y	0,048	0.000	Rela	From start	0,000
	Wy - Rüzgar	GCS	Uniform	0,048	1.000	Length		0,000
LF251	B1052	Wind	Y	0,048	0.000	Rela	From start	0,000
	Wy - Rüzgar	GCS	Uniform	0,048	1.000	Length		0,000
LF252	B1053	Wind	Y	0,048	0.000	Rela	From start	0,000
	Wy - Rüzgar	GCS	Uniform	0,048	1.000	Length		0,000
LF253	B1050	Wind	Y	0,048	0.000	Rela	From start	0,000
	Wy - Rüzgar	GCS	Uniform	0,048	1.000	Length		0,000
LF254	B1051	Wind	Y	0,048	0.000	Rela	From start	0,000
	Wy - Rüzgar	GCS	Uniform	0,048	1.000	Length		0,000
LF255	B1048	Wind	Y	0,048	0.000	Rela	From start	0,000
	Wy - Rüzgar	GCS	Uniform	0,048	1.000	Length		0,000
LF256	B1049	Wind	Y	0,048	0.000	Rela	From start	0,000
	Wy - Rüzgar	GCS	Uniform	0,048	1.000	Length		0,000
LF257	B1028	Wind	Y	0,048	0.000	Rela	From start	0,000
	Wy - Rüzgar	GCS	Uniform	0,048	1.000	Length		0,000
LF258	B1029	Wind	Y	0,048	0.000	Rela	From start	0,000
	Wy - Rüzgar	GCS	Uniform	0,048	1.000	Length		0,000
LF259	B1030	Wind	Y	0,048	0.000	Rela	From start	0,000
	Wy - Rüzgar	GCS	Uniform	0,048	1.000	Length		0,000
LF260	B1031	Wind	Y	0,048	0.000	Rela	From start	0,000
	Wy - Rüzgar	GCS	Uniform	0,048	1.000	Length		0,000
LF261	B1032	Wind	Y	0,048	0.000	Rela	From start	0,000
	Wy - Rüzgar	GCS	Uniform	0,048	1.000	Length		0,000
LF262	B1033	Wind	Y	0,048	0.000	Rela	From start	0,000
	Wy - Rüzgar	GCS	Uniform	0,048	1.000	Length		0,000
LF263	B1034	Wind	Y	0,048	0.000	Rela	From start	0,000
	Wy - Rüzgar	GCS	Uniform	0,048	1.000	Length		0,000
LF264	B1035	Wind	Y	0,048	0.000	Rela	From start	0,000
	Wy - Rüzgar	GCS	Uniform	0,048	1.000	Length		0,000
LF265	B1036	Wind	Y	0,048	0.000	Rela	From start	0,000
	Wy - Rüzgar	GCS	Uniform	0,048	1.000	Length		0,000
LF266	B1037	Wind	Y	0,048	0.000	Rela	From start	0,000
	Wy - Rüzgar	GCS	Uniform	0,048	1.000	Length		0,000

Name	Member Load case	Type System	Dir Distribution	Value - P_1 [kN/m] Value - P_2 [kN/m]	Pos x_1 Pos x_2	Coor Loc	Orig	Ecc ey Ecc ez
LF267	B1038	Wind	Y	0,048	0.000	Rela	From start	0,000
	Wy - Rüzgar	GCS	Uniform	0,048	1.000	Length		0,000
LF268	B1039	Wind	Y	0,048	0.000	Rela	From start	0,000
	Wy - Rüzgar	GCS	Uniform	0,048	1.000	Length		0,000
LF269	B1040	Wind	Y	0,048	0.000	Rela	From start	0,000
	Wy - Rüzgar	GCS	Uniform	0,048	1.000	Length		0,000
LF270	B1041	Wind	Y	0,048	0.000	Rela	From start	0,000
	Wy - Rüzgar	GCS	Uniform	0,048	1.000	Length		0,000
LF271	B1042	Wind	Y	0,048	0.000	Rela	From start	0,000
	Wy - Rüzgar	GCS	Uniform	0,048	1.000	Length		0,000
LF272	B1043	Wind	Y	0,048	0.000	Rela	From start	0,000
	Wy - Rüzgar	GCS	Uniform	0,048	1.000	Length		0,000
LF273	B1044	Wind	Y	0,048	0.000	Rela	From start	0,000
	Wy - Rüzgar	GCS	Uniform	0,048	1.000	Length		0,000
LF274	B1045	Wind	Y	0,048	0.000	Rela	From start	0,000
	Wy - Rüzgar	GCS	Uniform	0,048	1.000	Length		0,000
LF275	B1046	Wind	Y	0,048	0.000	Rela	From start	0,000
	Wy - Rüzgar	GCS	Uniform	0,048	1.000	Length		0,000
LF276	B1047	Wind	Y	0,048	0.000	Rela	From start	0,000
	Wy - Rüzgar	GCS	Uniform	0,048	1.000	Length		0,000
LF277	B1026	Wind	Y	0,044	0.000	Rela	From start	0,000
	Wy - Rüzgar	GCS	Uniform	0,044	1.000	Length		0,000
LF278	B1027	Wind	Y	0,044	0.000	Rela	From start	0,000
	Wy - Rüzgar	GCS	Uniform	0,044	1.000	Length		0,000
LF279	B1024	Wind	Y	0,044	0.000	Rela	From start	0,000
	Wy - Rüzgar	GCS	Uniform	0,044	1.000	Length		0,000
LF280	B1025	Wind	Y	0,044	0.000	Rela	From start	0,000
	Wy - Rüzgar	GCS	Uniform	0,044	1.000	Length		0,000
LF281	B1022	Wind	Y	0,044	0.000	Rela	From start	0,000
	Wy - Rüzgar	GCS	Uniform	0,044	1.000	Length		0,000
LF282	B1023	Wind	Y	0,044	0.000	Rela	From start	0,000
	Wy - Rüzgar	GCS	Uniform	0,044	1.000	Length		0,000
LF283	B1020	Wind	Y	0,044	0.000	Rela	From start	0,000
	Wy - Rüzgar	GCS	Uniform	0,044	1.000	Length		0,000
LF284	B1021	Wind	Y	0,044	0.000	Rela	From start	0,000
	Wy - Rüzgar	GCS	Uniform	0,044	1.000	Length		0,000
LF285	B1018	Wind	Y	0,044	0.000	Rela	From start	0,000
	Wy - Rüzgar	GCS	Uniform	0,044	1.000	Length		0,000
LF286	B1019	Wind	Y	0,044	0.000	Rela	From start	0,000
	Wy - Rüzgar	GCS	Uniform	0,044	1.000	Length		0,000
LF287	B1016	Wind	Y	0,044	0.000	Rela	From start	0,000
	Wy - Rüzgar	GCS	Uniform	0,044	1.000	Length		0,000
LF288	B1017	Wind	Y	0,044	0.000	Rela	From start	0,000
	Wy - Rüzgar	GCS	Uniform	0,044	1.000	Length		0,000
LF289	B1014	Wind	Y	0,044	0.000	Rela	From start	0,000
	Wy - Rüzgar	GCS	Uniform	0,044	1.000	Length		0,000
LF290	B1015	Wind	Y	0,044	0.000	Rela	From start	0,000
	Wy - Rüzgar	GCS	Uniform	0,044	1.000	Length		0,000
LF291	B1010	Wind	Y	0,044	0.000	Rela	From start	0,000
	Wy - Rüzgar	GCS	Uniform	0,044	1.000	Length		0,000
LF292	B1011	Wind	Y	0,044	0.000	Rela	From start	0,000
	Wy - Rüzgar	GCS	Uniform	0,044	1.000	Length		0,000
LF293	B1008	Wind	Y	0,044	0.000	Rela	From start	0,000
	Wy - Rüzgar	GCS	Uniform	0,044	1.000	Length		0,000
LF294	B1009	Wind	Y	0,044	0.000	Rela	From start	0,000
	Wy - Rüzgar	GCS	Uniform	0,044	1.000	Length		0,000
LF295	B988	Wind	Y	0,043	0.000	Rela	From start	0,000
	Wy - Rüzgar	GCS	Uniform	0,043	1.000	Length		0,000
LF296	B989	Wind	Y	0,043	0.000	Rela	From start	0,000
	Wy - Rüzgar	GCS	Uniform	0,043	1.000	Length		0,000
LF297	B990	Wind	Y	0,043	0.000	Rela	From start	0,000
	Wy - Rüzgar	GCS	Uniform	0,043	1.000	Length		0,000
LF298	B991	Wind	Y	0,043	0.000	Rela	From start	0,000
	Wy - Rüzgar	GCS	Uniform	0,043	1.000	Length		0,000
LF299	B992	Wind	Y	0,043	0.000	Rela	From start	0,000
	Wy - Rüzgar	GCS	Uniform	0,043	1.000	Length		0,000
LF300	B993	Wind	Y	0,043	0.000	Rela	From start	0,000
	Wy - Rüzgar	GCS	Uniform	0,043	1.000	Length		0,000
LF301	B994	Wind	Y	0,043	0.000	Rela	From start	0,000
	Wy - Rüzgar	GCS	Uniform	0,043	1.000	Length		0,000
LF302	B995	Wind	Y	0,043	0.000	Rela	From start	0,000
	Wy - Rüzgar	GCS	Uniform	0,043	1.000	Length		0,000
LF303	B996	Wind	Y	0,043	0.000	Rela	From start	0,000
	Wy - Rüzgar	GCS	Uniform	0,043	1.000	Length		0,000

Name	Member Load case	Type System	Dir Distribution	Value - P_1 [kN/m] Value - P_2 [kN/m]	Pos x_1 Pos x_2	Coor Loc	Orig	Ecc ey Ecc ez
LF304	B997	Wind	Y	0,043	0.000	Rela	From start	0,000
	Wy - Rüzgar	GCS	Uniform	0,043	1.000	Length		0,000
LF305	B998	Wind	Y	0,043	0.000	Rela	From start	0,000
	Wy - Rüzgar	GCS	Uniform	0,043	1.000	Length		0,000
LF306	B999	Wind	Y	0,043	0.000	Rela	From start	0,000
	Wy - Rüzgar	GCS	Uniform	0,043	1.000	Length		0,000
LF307	B1000	Wind	Y	0,043	0.000	Rela	From start	0,000
	Wy - Rüzgar	GCS	Uniform	0,043	1.000	Length		0,000
LF308	B1001	Wind	Y	0,043	0.000	Rela	From start	0,000
	Wy - Rüzgar	GCS	Uniform	0,043	1.000	Length		0,000
LF309	B1002	Wind	Y	0,043	0.000	Rela	From start	0,000
	Wy - Rüzgar	GCS	Uniform	0,043	1.000	Length		0,000
LF310	B1003	Wind	Y	0,043	0.000	Rela	From start	0,000
	Wy - Rüzgar	GCS	Uniform	0,043	1.000	Length		0,000
LF311	B1004	Wind	Y	0,043	0.000	Rela	From start	0,000
	Wy - Rüzgar	GCS	Uniform	0,043	1.000	Length		0,000
LF312	B1005	Wind	Y	0,043	0.000	Rela	From start	0,000
	Wy - Rüzgar	GCS	Uniform	0,043	1.000	Length		0,000
LF313	B1006	Wind	Y	0,043	0.000	Rela	From start	0,000
	Wy - Rüzgar	GCS	Uniform	0,043	1.000	Length		0,000
LF314	B1007	Wind	Y	0,043	0.000	Rela	From start	0,000
	Wy - Rüzgar	GCS	Uniform	0,043	1.000	Length		0,000
LF315	B986	Wind	Y	0,042	0.000	Rela	From start	0,000
	Wy - Rüzgar	GCS	Uniform	0,042	1.000	Length		0,000
LF316	B987	Wind	Y	0,042	0.000	Rela	From start	0,000
	Wy - Rüzgar	GCS	Uniform	0,042	1.000	Length		0,000
LF317	B984	Wind	Y	0,042	0.000	Rela	From start	0,000
	Wy - Rüzgar	GCS	Uniform	0,042	1.000	Length		0,000
LF318	B985	Wind	Y	0,042	0.000	Rela	From start	0,000
	Wy - Rüzgar	GCS	Uniform	0,042	1.000	Length		0,000
LF319	B982	Wind	Y	0,042	0.000	Rela	From start	0,000
	Wy - Rüzgar	GCS	Uniform	0,042	1.000	Length		0,000
LF320	B983	Wind	Y	0,042	0.000	Rela	From start	0,000
	Wy - Rüzgar	GCS	Uniform	0,042	1.000	Length		0,000
LF321	B980	Wind	Y	0,042	0.000	Rela	From start	0,000
	Wy - Rüzgar	GCS	Uniform	0,042	1.000	Length		0,000
LF322	B981	Wind	Y	0,042	0.000	Rela	From start	0,000
	Wy - Rüzgar	GCS	Uniform	0,042	1.000	Length		0,000
LF323	B978	Wind	Y	0,042	0.000	Rela	From start	0,000
	Wy - Rüzgar	GCS	Uniform	0,042	1.000	Length		0,000
LF324	B979	Wind	Y	0,042	0.000	Rela	From start	0,000
	Wy - Rüzgar	GCS	Uniform	0,042	1.000	Length		0,000
LF325	B976	Wind	Y	0,042	0.000	Rela	From start	0,000
	Wy - Rüzgar	GCS	Uniform	0,042	1.000	Length		0,000
LF326	B977	Wind	Y	0,042	0.000	Rela	From start	0,000
	Wy - Rüzgar	GCS	Uniform	0,042	1.000	Length		0,000
LF327	B974	Wind	Y	0,042	0.000	Rela	From start	0,000
	Wy - Rüzgar	GCS	Uniform	0,042	1.000	Length		0,000
LF328	B975	Wind	Y	0,042	0.000	Rela	From start	0,000
	Wy - Rüzgar	GCS	Uniform	0,042	1.000	Length		0,000
LF329	B972	Wind	Y	0,042	0.000	Rela	From start	0,000
	Wy - Rüzgar	GCS	Uniform	0,042	1.000	Length		0,000
LF330	B973	Wind	Y	0,042	0.000	Rela	From start	0,000
	Wy - Rüzgar	GCS	Uniform	0,042	1.000	Length		0,000
LF331	B970	Wind	Y	0,042	0.000	Rela	From start	0,000
	Wy - Rüzgar	GCS	Uniform	0,042	1.000	Length		0,000
LF332	B971	Wind	Y	0,042	0.000	Rela	From start	0,000
	Wy - Rüzgar	GCS	Uniform	0,042	1.000	Length		0,000
LF333	B968	Wind	Y	0,042	0.000	Rela	From start	0,000
	Wy - Rüzgar	GCS	Uniform	0,042	1.000	Length		0,000
LF334	B969	Wind	Y	0,042	0.000	Rela	From start	0,000
	Wy - Rüzgar	GCS	Uniform	0,042	1.000	Length		0,000
LF335	B948	Wind	Y	0,041	0.000	Rela	From start	0,000
	Wy - Rüzgar	GCS	Uniform	0,041	1.000	Length		0,000
LF336	B949	Wind	Y	0,041	0.000	Rela	From start	0,000
	Wy - Rüzgar	GCS	Uniform	0,041	1.000	Length		0,000
LF337	B950	Wind	Y	0,041	0.000	Rela	From start	0,000
	Wy - Rüzgar	GCS	Uniform	0,041	1.000	Length		0,000
LF338	B951	Wind	Y	0,041	0.000	Rela	From start	0,000
	Wy - Rüzgar	GCS	Uniform	0,041	1.000	Length		0,000
LF339	B952	Wind	Y	0,041	0.000	Rela	From start	0,000
	Wy - Rüzgar	GCS	Uniform	0,041	1.000	Length		0,000
LF340	B953	Wind	Y	0,041	0.000	Rela	From start	0,000
	Wy - Rüzgar	GCS	Uniform	0,041	1.000	Length		0,000

Name	Member Load case	Type System	Dir Distribution	Value - P_1 [kN/m] Value - P_2 [kN/m]	Pos x_1 Pos x_2	Coor Loc	Orig	Ecc ey Ecc ez
LF341	B954	Wind	Y	0,041	0.000	Rela	From start	0,000
	Wy - Rüzgar	GCS	Uniform	0,041	1.000	Length		0,000
LF342	B955	Wind	Y	0,041	0.000	Rela	From start	0,000
	Wy - Rüzgar	GCS	Uniform	0,041	1.000	Length		0,000
LF343	B956	Wind	Y	0,041	0.000	Rela	From start	0,000
	Wy - Rüzgar	GCS	Uniform	0,041	1.000	Length		0,000
LF344	B957	Wind	Y	0,041	0.000	Rela	From start	0,000
	Wy - Rüzgar	GCS	Uniform	0,041	1.000	Length		0,000
LF345	B958	Wind	Y	0,041	0.000	Rela	From start	0,000
	Wy - Rüzgar	GCS	Uniform	0,041	1.000	Length		0,000
LF346	B959	Wind	Y	0,041	0.000	Rela	From start	0,000
	Wy - Rüzgar	GCS	Uniform	0,041	1.000	Length		0,000
LF347	B960	Wind	Y	0,041	0.000	Rela	From start	0,000
	Wy - Rüzgar	GCS	Uniform	0,041	1.000	Length		0,000
LF348	B961	Wind	Y	0,041	0.000	Rela	From start	0,000
	Wy - Rüzgar	GCS	Uniform	0,041	1.000	Length		0,000
LF349	B962	Wind	Y	0,041	0.000	Rela	From start	0,000
	Wy - Rüzgar	GCS	Uniform	0,041	1.000	Length		0,000
LF350	B963	Wind	Y	0,041	0.000	Rela	From start	0,000
	Wy - Rüzgar	GCS	Uniform	0,041	1.000	Length		0,000
LF351	B964	Wind	Y	0,041	0.000	Rela	From start	0,000
	Wy - Rüzgar	GCS	Uniform	0,041	1.000	Length		0,000
LF352	B965	Wind	Y	0,041	0.000	Rela	From start	0,000
	Wy - Rüzgar	GCS	Uniform	0,041	1.000	Length		0,000
LF353	B966	Wind	Y	0,041	0.000	Rela	From start	0,000
	Wy - Rüzgar	GCS	Uniform	0,041	1.000	Length		0,000
LF354	B967	Wind	Y	0,041	0.000	Rela	From start	0,000
	Wy - Rüzgar	GCS	Uniform	0,041	1.000	Length		0,000
LF355	B946	Wind	Y	0,040	0.000	Rela	From start	0,000
	Wy - Rüzgar	GCS	Uniform	0,040	1.000	Length		0,000
LF356	B947	Wind	Y	0,040	0.000	Rela	From start	0,000
	Wy - Rüzgar	GCS	Uniform	0,040	1.000	Length		0,000
LF357	B944	Wind	Y	0,040	0.000	Rela	From start	0,000
	Wy - Rüzgar	GCS	Uniform	0,040	1.000	Length		0,000
LF358	B945	Wind	Y	0,040	0.000	Rela	From start	0,000
	Wy - Rüzgar	GCS	Uniform	0,040	1.000	Length		0,000
LF359	B942	Wind	Y	0,040	0.000	Rela	From start	0,000
	Wy - Rüzgar	GCS	Uniform	0,040	1.000	Length		0,000
LF360	B943	Wind	Y	0,040	0.000	Rela	From start	0,000
	Wy - Rüzgar	GCS	Uniform	0,040	1.000	Length		0,000
LF361	B940	Wind	Y	0,040	0.000	Rela	From start	0,000
	Wy - Rüzgar	GCS	Uniform	0,040	1.000	Length		0,000
LF362	B941	Wind	Y	0,040	0.000	Rela	From start	0,000
	Wy - Rüzgar	GCS	Uniform	0,040	1.000	Length		0,000
LF363	B938	Wind	Y	0,040	0.000	Rela	From start	0,000
	Wy - Rüzgar	GCS	Uniform	0,040	1.000	Length		0,000
LF364	B939	Wind	Y	0,040	0.000	Rela	From start	0,000
	Wy - Rüzgar	GCS	Uniform	0,040	1.000	Length		0,000
LF365	B936	Wind	Y	0,040	0.000	Rela	From start	0,000
	Wy - Rüzgar	GCS	Uniform	0,040	1.000	Length		0,000
LF366	B937	Wind	Y	0,040	0.000	Rela	From start	0,000
	Wy - Rüzgar	GCS	Uniform	0,040	1.000	Length		0,000
LF367	B934	Wind	Y	0,040	0.000	Rela	From start	0,000
	Wy - Rüzgar	GCS	Uniform	0,040	1.000	Length		0,000
LF368	B935	Wind	Y	0,040	0.000	Rela	From start	0,000
	Wy - Rüzgar	GCS	Uniform	0,040	1.000	Length		0,000
LF369	B932	Wind	Y	0,040	0.000	Rela	From start	0,000
	Wy - Rüzgar	GCS	Uniform	0,040	1.000	Length		0,000
LF370	B933	Wind	Y	0,040	0.000	Rela	From start	0,000
	Wy - Rüzgar	GCS	Uniform	0,040	1.000	Length		0,000
LF371	B930	Wind	Y	0,040	0.000	Rela	From start	0,000
	Wy - Rüzgar	GCS	Uniform	0,040	1.000	Length		0,000
LF372	B931	Wind	Y	0,040	0.000	Rela	From start	0,000
	Wy - Rüzgar	GCS	Uniform	0,040	1.000	Length		0,000
LF373	B928	Wind	Y	0,040	0.000	Rela	From start	0,000
	Wy - Rüzgar	GCS	Uniform	0,040	1.000	Length		0,000
LF374	B929	Wind	Y	0,040	0.000	Rela	From start	0,000
	Wy - Rüzgar	GCS	Uniform	0,040	1.000	Length		0,000
LF375	B908	Wind	Y	0,039	0.000	Rela	From start	0,000
	Wy - Rüzgar	GCS	Uniform	0,039	1.000	Length		0,000
LF376	B909	Wind	Y	0,039	0.000	Rela	From start	0,000
	Wy - Rüzgar	GCS	Uniform	0,039	1.000	Length		0,000
LF377	B910	Wind	Y	0,039	0.000	Rela	From start	0,000
	Wy - Rüzgar	GCS	Uniform	0,039	1.000	Length		0,000

Name	Member Load case	Type System	Dir Distribution	Value - P_1 [kN/m] Value - P_2 [kN/m]	Pos x_1 Pos x_2	Coor Loc	Orig	Ecc ey Ecc ez
LF378	B911	Wind	Y	0,039	0.000	Rela	From start	0,000
	Wy - Rüzgar	GCS	Uniform	0,039	1.000	Length		0,000
LF379	B912	Wind	Y	0,039	0.000	Rela	From start	0,000
	Wy - Rüzgar	GCS	Uniform	0,039	1.000	Length		0,000
LF380	B913	Wind	Y	0,039	0.000	Rela	From start	0,000
	Wy - Rüzgar	GCS	Uniform	0,039	1.000	Length		0,000
LF381	B914	Wind	Y	0,039	0.000	Rela	From start	0,000
	Wy - Rüzgar	GCS	Uniform	0,039	1.000	Length		0,000
LF382	B915	Wind	Y	0,039	0.000	Rela	From start	0,000
	Wy - Rüzgar	GCS	Uniform	0,039	1.000	Length		0,000
LF383	B916	Wind	Y	0,039	0.000	Rela	From start	0,000
	Wy - Rüzgar	GCS	Uniform	0,039	1.000	Length		0,000
LF384	B917	Wind	Y	0,039	0.000	Rela	From start	0,000
	Wy - Rüzgar	GCS	Uniform	0,039	1.000	Length		0,000
LF385	B918	Wind	Y	0,039	0.000	Rela	From start	0,000
	Wy - Rüzgar	GCS	Uniform	0,039	1.000	Length		0,000
LF386	B919	Wind	Y	0,039	0.000	Rela	From start	0,000
	Wy - Rüzgar	GCS	Uniform	0,039	1.000	Length		0,000
LF387	B920	Wind	Y	0,039	0.000	Rela	From start	0,000
	Wy - Rüzgar	GCS	Uniform	0,039	1.000	Length		0,000
LF388	B921	Wind	Y	0,039	0.000	Rela	From start	0,000
	Wy - Rüzgar	GCS	Uniform	0,039	1.000	Length		0,000
LF389	B922	Wind	Y	0,039	0.000	Rela	From start	0,000
	Wy - Rüzgar	GCS	Uniform	0,039	1.000	Length		0,000
LF390	B923	Wind	Y	0,039	0.000	Rela	From start	0,000
	Wy - Rüzgar	GCS	Uniform	0,039	1.000	Length		0,000
LF391	B924	Wind	Y	0,039	0.000	Rela	From start	0,000
	Wy - Rüzgar	GCS	Uniform	0,039	1.000	Length		0,000
LF392	B925	Wind	Y	0,039	0.000	Rela	From start	0,000
	Wy - Rüzgar	GCS	Uniform	0,039	1.000	Length		0,000
LF393	B926	Wind	Y	0,039	0.000	Rela	From start	0,000
	Wy - Rüzgar	GCS	Uniform	0,039	1.000	Length		0,000
LF394	B927	Wind	Y	0,039	0.000	Rela	From start	0,000
	Wy - Rüzgar	GCS	Uniform	0,039	1.000	Length		0,000
LF395	B906	Wind	Y	0,038	0.000	Rela	From start	0,000
	Wy - Rüzgar	GCS	Uniform	0,038	1.000	Length		0,000
LF396	B907	Wind	Y	0,038	0.000	Rela	From start	0,000
	Wy - Rüzgar	GCS	Uniform	0,038	1.000	Length		0,000
LF397	B904	Wind	Y	0,038	0.000	Rela	From start	0,000
	Wy - Rüzgar	GCS	Uniform	0,038	1.000	Length		0,000
LF398	B905	Wind	Y	0,038	0.000	Rela	From start	0,000
	Wy - Rüzgar	GCS	Uniform	0,038	1.000	Length		0,000
LF399	B902	Wind	Y	0,038	0.000	Rela	From start	0,000
	Wy - Rüzgar	GCS	Uniform	0,038	1.000	Length		0,000
LF400	B903	Wind	Y	0,038	0.000	Rela	From start	0,000
	Wy - Rüzgar	GCS	Uniform	0,038	1.000	Length		0,000
LF401	B900	Wind	Y	0,038	0.000	Rela	From start	0,000
	Wy - Rüzgar	GCS	Uniform	0,038	1.000	Length		0,000
LF402	B901	Wind	Y	0,038	0.000	Rela	From start	0,000
	Wy - Rüzgar	GCS	Uniform	0,038	1.000	Length		0,000
LF403	B898	Wind	Y	0,038	0.000	Rela	From start	0,000
	Wy - Rüzgar	GCS	Uniform	0,038	1.000	Length		0,000
LF404	B899	Wind	Y	0,038	0.000	Rela	From start	0,000
	Wy - Rüzgar	GCS	Uniform	0,038	1.000	Length		0,000
LF405	B896	Wind	Y	0,038	0.000	Rela	From start	0,000
	Wy - Rüzgar	GCS	Uniform	0,038	1.000	Length		0,000
LF406	B897	Wind	Y	0,038	0.000	Rela	From start	0,000
	Wy - Rüzgar	GCS	Uniform	0,038	1.000	Length		0,000
LF407	B894	Wind	Y	0,038	0.000	Rela	From start	0,000
	Wy - Rüzgar	GCS	Uniform	0,038	1.000	Length		0,000
LF408	B895	Wind	Y	0,038	0.000	Rela	From start	0,000
	Wy - Rüzgar	GCS	Uniform	0,038	1.000	Length		0,000
LF409	B892	Wind	Y	0,038	0.000	Rela	From start	0,000
	Wy - Rüzgar	GCS	Uniform	0,038	1.000	Length		0,000
LF410	B893	Wind	Y	0,038	0.000	Rela	From start	0,000
	Wy - Rüzgar	GCS	Uniform	0,038	1.000	Length		0,000
LF411	B890	Wind	Y	0,038	0.000	Rela	From start	0,000
	Wy - Rüzgar	GCS	Uniform	0,038	1.000	Length		0,000
LF412	B891	Wind	Y	0,038	0.000	Rela	From start	0,000
	Wy - Rüzgar	GCS	Uniform	0,038	1.000	Length		0,000
LF413	B888	Wind	Y	0,038	0.000	Rela	From start	0,000
	Wy - Rüzgar	GCS	Uniform	0,038	1.000	Length		0,000
LF414	B889	Wind	Y	0,038	0.000	Rela	From start	0,000
	Wy - Rüzgar	GCS	Uniform	0,038	1.000	Length		0,000

Name	Member Load case	Type System	Dir Distribution	Value - P_1 [kN/m] Value - P_2 [kN/m]	Pos x_1 Pos x_2	Coor Loc	Orig	Ecc ey Ecc ez
LF415	B296	Wind	Y	0,037	0.000	Rela	From start	0,000
	Wy - Rüzgar	GCS	Uniform	0,037	1.000	Length		0,000
LF416	B868	Wind	Y	0,036	0.000	Rela	From start	0,000
	Wy - Rüzgar	GCS	Uniform	0,036	1.000	Length		0,000
LF417	B297	Wind	Y	0,037	0.000	Rela	From start	0,000
	Wy - Rüzgar	GCS	Uniform	0,037	1.000	Length		0,000
LF418	B869	Wind	Y	0,036	0.000	Rela	From start	0,000
	Wy - Rüzgar	GCS	Uniform	0,036	1.000	Length		0,000
LF419	B298	Wind	Y	0,037	0.000	Rela	From start	0,000
	Wy - Rüzgar	GCS	Uniform	0,037	1.000	Length		0,000
LF420	B870	Wind	Y	0,036	0.000	Rela	From start	0,000
	Wy - Rüzgar	GCS	Uniform	0,036	1.000	Length		0,000
LF421	B299	Wind	Y	0,037	0.000	Rela	From start	0,000
	Wy - Rüzgar	GCS	Uniform	0,037	1.000	Length		0,000
LF422	B871	Wind	Y	0,036	0.000	Rela	From start	0,000
	Wy - Rüzgar	GCS	Uniform	0,036	1.000	Length		0,000
LF423	B300	Wind	Y	0,037	0.000	Rela	From start	0,000
	Wy - Rüzgar	GCS	Uniform	0,037	1.000	Length		0,000
LF424	B872	Wind	Y	0,036	0.000	Rela	From start	0,000
	Wy - Rüzgar	GCS	Uniform	0,036	1.000	Length		0,000
LF425	B301	Wind	Y	0,037	0.000	Rela	From start	0,000
	Wy - Rüzgar	GCS	Uniform	0,037	1.000	Length		0,000
LF426	B873	Wind	Y	0,036	0.000	Rela	From start	0,000
	Wy - Rüzgar	GCS	Uniform	0,036	1.000	Length		0,000
LF427	B302	Wind	Y	0,037	0.000	Rela	From start	0,000
	Wy - Rüzgar	GCS	Uniform	0,037	1.000	Length		0,000
LF428	B874	Wind	Y	0,036	0.000	Rela	From start	0,000
	Wy - Rüzgar	GCS	Uniform	0,036	1.000	Length		0,000
LF429	B494	Wind	Y	0,037	0.000	Rela	From start	0,000
	Wy - Rüzgar	GCS	Uniform	0,037	1.000	Length		0,000
LF430	B875	Wind	Y	0,036	0.000	Rela	From start	0,000
	Wy - Rüzgar	GCS	Uniform	0,036	1.000	Length		0,000
LF431	B554	Wind	Y	0,037	0.000	Rela	From start	0,000
	Wy - Rüzgar	GCS	Uniform	0,037	1.000	Length		0,000
LF432	B876	Wind	Y	0,036	0.000	Rela	From start	0,000
	Wy - Rüzgar	GCS	Uniform	0,036	1.000	Length		0,000
LF433	B614	Wind	Y	0,037	0.000	Rela	From start	0,000
	Wy - Rüzgar	GCS	Uniform	0,037	1.000	Length		0,000
LF434	B877	Wind	Y	0,036	0.000	Rela	From start	0,000
	Wy - Rüzgar	GCS	Uniform	0,036	1.000	Length		0,000
LF435	B613	Wind	Y	0,036	0.000	Rela	From start	0,000
	Wy - Rüzgar	GCS	Uniform	0,036	1.000	Length		0,000
LF436	B886	Wind	Y	0,035	0.000	Rela	From start	0,000
	Wy - Rüzgar	GCS	Uniform	0,035	1.000	Length		0,000
LF437	B553	Wind	Y	0,036	0.000	Rela	From start	0,000
	Wy - Rüzgar	GCS	Uniform	0,036	1.000	Length		0,000
LF438	B885	Wind	Y	0,035	0.000	Rela	From start	0,000
	Wy - Rüzgar	GCS	Uniform	0,035	1.000	Length		0,000
LF439	B493	Wind	Y	0,036	0.000	Rela	From start	0,000
	Wy - Rüzgar	GCS	Uniform	0,036	1.000	Length		0,000
LF440	B884	Wind	Y	0,035	0.000	Rela	From start	0,000
	Wy - Rüzgar	GCS	Uniform	0,035	1.000	Length		0,000
LF441	B295	Wind	Y	0,036	0.000	Rela	From start	0,000
	Wy - Rüzgar	GCS	Uniform	0,036	1.000	Length		0,000
LF442	B883	Wind	Y	0,035	0.000	Rela	From start	0,000
	Wy - Rüzgar	GCS	Uniform	0,035	1.000	Length		0,000
LF443	B294	Wind	Y	0,036	0.000	Rela	From start	0,000
	Wy - Rüzgar	GCS	Uniform	0,036	1.000	Length		0,000
LF444	B882	Wind	Y	0,035	0.000	Rela	From start	0,000
	Wy - Rüzgar	GCS	Uniform	0,035	1.000	Length		0,000
LF445	B293	Wind	Y	0,036	0.000	Rela	From start	0,000
	Wy - Rüzgar	GCS	Uniform	0,036	1.000	Length		0,000
LF446	B881	Wind	Y	0,035	0.000	Rela	From start	0,000
	Wy - Rüzgar	GCS	Uniform	0,035	1.000	Length		0,000
LF447	B292	Wind	Y	0,036	0.000	Rela	From start	0,000
	Wy - Rüzgar	GCS	Uniform	0,036	1.000	Length		0,000
LF448	B880	Wind	Y	0,035	0.000	Rela	From start	0,000
	Wy - Rüzgar	GCS	Uniform	0,035	1.000	Length		0,000
LF449	B291	Wind	Y	0,036	0.000	Rela	From start	0,000
	Wy - Rüzgar	GCS	Uniform	0,036	1.000	Length		0,000
LF450	B879	Wind	Y	0,035	0.000	Rela	From start	0,000
	Wy - Rüzgar	GCS	Uniform	0,035	1.000	Length		0,000
LF451	B290	Wind	Y	0,036	0.000	Rela	From start	0,000
	Wy - Rüzgar	GCS	Uniform	0,036	1.000	Length		0,000

Name	Member Load case	Type System	Dir Distribution	Value - P_1 [kN/m] Value - P_2 [kN/m]	Pos x_1 Pos x_2	Coor Loc	Orig	Ecc ey Ecc ez
LF452	B878	Wind	Y	0,035	0.000	Rela	From start	0,000
	Wy - Rüzgar	GCS	Uniform	0,035	1.000	Length		0,000
LF453	B289	Wind	Y	0,036	0.000	Rela	From start	0,000
	Wy - Rüzgar	GCS	Uniform	0,036	1.000	Length		0,000
LF454	B887	Wind	Y	0,035	0.000	Rela	From start	0,000
	Wy - Rüzgar	GCS	Uniform	0,035	1.000	Length		0,000
LF455	B1012	Wind	Y	0,044	0.000	Rela	From start	0,000
	Wy - Rüzgar	GCS	Uniform	0,044	1.000	Length		0,000
LF456	B1013	Wind	Y	0,044	0.000	Rela	From start	0,000
	Wy - Rüzgar	GCS	Uniform	0,044	1.000	Length		0,000
LF457	PL2	Wind	Y	0,322	0.000	Rela	From start	0,000
	Wy - Rüzgar	GCS	Uniform	0,322	1.000	Length		0,000
LF458	PL4	Wind	Y	0,322	0.000	Rela	From start	0,000
	Wy - Rüzgar	GCS	Uniform	0,322	1.000	Length		0,000
LF459	PL6	Wind	Y	0,322	0.000	Rela	From start	0,000
	Wy - Rüzgar	GCS	Uniform	0,322	1.000	Length		0,000
LF460	PL8	Wind	Y	0,322	0.000	Rela	From start	0,000
	Wy - Rüzgar	GCS	Uniform	0,322	1.000	Length		0,000
LF461	PL22	Wind	Y	0,332	0.000	Rela	From start	0,000
	Wy - Rüzgar	GCS	Uniform	0,332	1.000	Length		0,000
LF462	PL24	Wind	Y	0,332	0.000	Rela	From start	0,000
	Wy - Rüzgar	GCS	Uniform	0,332	1.000	Length		0,000
LF463	PL26	Wind	Y	0,332	0.000	Rela	From start	0,000
	Wy - Rüzgar	GCS	Uniform	0,332	1.000	Length		0,000
LF464	PL28	Wind	Y	0,332	0.000	Rela	From start	0,000
	Wy - Rüzgar	GCS	Uniform	0,332	1.000	Length		0,000
LF465	PL30	Wind	Y	0,332	0.000	Rela	From start	0,000
	Wy - Rüzgar	GCS	Uniform	0,332	1.000	Length		0,000
LF466	PL32	Wind	Y	0,332	0.000	Rela	From start	0,000
	Wy - Rüzgar	GCS	Uniform	0,332	1.000	Length		0,000
LF467	PL34	Wind	Y	0,332	0.000	Rela	From start	0,000
	Wy - Rüzgar	GCS	Uniform	0,332	1.000	Length		0,000
LF468	PL36	Wind	Y	0,332	0.000	Rela	From start	0,000
	Wy - Rüzgar	GCS	Uniform	0,332	1.000	Length		0,000
LF469	PL38	Wind	Y	0,332	0.000	Rela	From start	0,000
	Wy - Rüzgar	GCS	Uniform	0,332	1.000	Length		0,000
LF470	PL40	Wind	Y	0,332	0.000	Rela	From start	0,000
	Wy - Rüzgar	GCS	Uniform	0,332	1.000	Length		0,000
LF471	PL42	Wind	Y	0,341	0.000	Rela	From start	0,000
	Wy - Rüzgar	GCS	Uniform	0,341	1.000	Length		0,000
LF472	PL44	Wind	Y	0,341	0.000	Rela	From start	0,000
	Wy - Rüzgar	GCS	Uniform	0,341	1.000	Length		0,000
LF473	PL46	Wind	Y	0,341	0.000	Rela	From start	0,000
	Wy - Rüzgar	GCS	Uniform	0,341	1.000	Length		0,000
LF474	PL48	Wind	Y	0,341	0.000	Rela	From start	0,000
	Wy - Rüzgar	GCS	Uniform	0,341	1.000	Length		0,000
LF475	PL50	Wind	Y	0,341	0.000	Rela	From start	0,000
	Wy - Rüzgar	GCS	Uniform	0,341	1.000	Length		0,000
LF476	PL52	Wind	Y	0,341	0.000	Rela	From start	0,000
	Wy - Rüzgar	GCS	Uniform	0,341	1.000	Length		0,000
LF477	PL54	Wind	Y	0,341	0.000	Rela	From start	0,000
	Wy - Rüzgar	GCS	Uniform	0,341	1.000	Length		0,000
LF478	PL56	Wind	Y	0,341	0.000	Rela	From start	0,000
	Wy - Rüzgar	GCS	Uniform	0,341	1.000	Length		0,000
LF479	PL58	Wind	Y	0,341	0.000	Rela	From start	0,000
	Wy - Rüzgar	GCS	Uniform	0,341	1.000	Length		0,000
LF480	PL60	Wind	Y	0,341	0.000	Rela	From start	0,000
	Wy - Rüzgar	GCS	Uniform	0,341	1.000	Length		0,000
LF481	PL10	Wind	Y	0,322	0.000	Rela	From start	0,000
	Wy - Rüzgar	GCS	Uniform	0,322	1.000	Length		0,000
LF482	PL12	Wind	Y	0,322	0.000	Rela	From start	0,000
	Wy - Rüzgar	GCS	Uniform	0,322	1.000	Length		0,000
LF483	PL14	Wind	Y	0,322	0.000	Rela	From start	0,000
	Wy - Rüzgar	GCS	Uniform	0,322	1.000	Length		0,000
LF484	PL16	Wind	Y	0,322	0.000	Rela	From start	0,000
	Wy - Rüzgar	GCS	Uniform	0,322	1.000	Length		0,000
LF485	PL18	Wind	Y	0,322	0.000	Rela	From start	0,000
	Wy - Rüzgar	GCS	Uniform	0,322	1.000	Length		0,000
LF486	PL20	Wind	Y	0,322	0.000	Rela	From start	0,000
	Wy - Rüzgar	GCS	Uniform	0,322	1.000	Length		0,000
LF487	PL62	Wind	Y	0,351	0.000	Rela	From start	0,000
	Wy - Rüzgar	GCS	Uniform	0,351	1.000	Length		0,000
LF488	PL64	Wind	Y	0,351	0.000	Rela	From start	0,000
	Wy - Rüzgar	GCS	Uniform	0,351	1.000	Length		0,000

Name	Member Load case	Type System	Dir Distribution	Value - P_1 [kN/m] Value - P_2 [kN/m]	Pos x_1 Pos x_2	Coor Loc	Orig	Ecc ey Ecc ez
LF489	PL66	Wind	Y	0,351	0.000	Rela	From start	0,000
	Wy - Rüzgar	GCS	Uniform	0,351	1.000	Length		0,000
LF490	PL68	Wind	Y	0,351	0.000	Rela	From start	0,000
	Wy - Rüzgar	GCS	Uniform	0,351	1.000	Length		0,000
LF491	PL70	Wind	Y	0,351	0.000	Rela	From start	0,000
	Wy - Rüzgar	GCS	Uniform	0,351	1.000	Length		0,000
LF492	PL72	Wind	Y	0,351	0.000	Rela	From start	0,000
	Wy - Rüzgar	GCS	Uniform	0,351	1.000	Length		0,000
LF493	PL74	Wind	Y	0,351	0.000	Rela	From start	0,000
	Wy - Rüzgar	GCS	Uniform	0,351	1.000	Length		0,000
LF494	PL76	Wind	Y	0,351	0.000	Rela	From start	0,000
	Wy - Rüzgar	GCS	Uniform	0,351	1.000	Length		0,000
LF495	PL78	Wind	Y	0,351	0.000	Rela	From start	0,000
	Wy - Rüzgar	GCS	Uniform	0,351	1.000	Length		0,000
LF496	PL80	Wind	Y	0,351	0.000	Rela	From start	0,000
	Wy - Rüzgar	GCS	Uniform	0,351	1.000	Length		0,000
LF497	PL82	Wind	Y	0,361	0.000	Rela	From start	0,000
	Wy - Rüzgar	GCS	Uniform	0,361	1.000	Length		0,000
LF498	PL84	Wind	Y	0,361	0.000	Rela	From start	0,000
	Wy - Rüzgar	GCS	Uniform	0,361	1.000	Length		0,000
LF499	PL86	Wind	Y	0,361	0.000	Rela	From start	0,000
	Wy - Rüzgar	GCS	Uniform	0,361	1.000	Length		0,000
LF500	PL88	Wind	Y	0,361	0.000	Rela	From start	0,000
	Wy - Rüzgar	GCS	Uniform	0,361	1.000	Length		0,000
LF501	PL90	Wind	Y	0,361	0.000	Rela	From start	0,000
	Wy - Rüzgar	GCS	Uniform	0,361	1.000	Length		0,000
LF502	PL92	Wind	Y	0,361	0.000	Rela	From start	0,000
	Wy - Rüzgar	GCS	Uniform	0,361	1.000	Length		0,000
LF503	PL94	Wind	Y	0,361	0.000	Rela	From start	0,000
	Wy - Rüzgar	GCS	Uniform	0,361	1.000	Length		0,000
LF504	PL96	Wind	Y	0,361	0.000	Rela	From start	0,000
	Wy - Rüzgar	GCS	Uniform	0,361	1.000	Length		0,000
LF505	PL98	Wind	Y	0,361	0.000	Rela	From start	0,000
	Wy - Rüzgar	GCS	Uniform	0,361	1.000	Length		0,000
LF506	PL100	Wind	Y	0,361	0.000	Rela	From start	0,000
	Wy - Rüzgar	GCS	Uniform	0,361	1.000	Length		0,000
LF507	PL102	Wind	Y	0,371	0.000	Rela	From start	0,000
	Wy - Rüzgar	GCS	Uniform	0,371	1.000	Length		0,000
LF508	PL104	Wind	Y	0,371	0.000	Rela	From start	0,000
	Wy - Rüzgar	GCS	Uniform	0,371	1.000	Length		0,000
LF509	PL106	Wind	Y	0,371	0.000	Rela	From start	0,000
	Wy - Rüzgar	GCS	Uniform	0,371	1.000	Length		0,000
LF510	PL108	Wind	Y	0,371	0.000	Rela	From start	0,000
	Wy - Rüzgar	GCS	Uniform	0,371	1.000	Length		0,000
LF511	PL110	Wind	Y	0,371	0.000	Rela	From start	0,000
	Wy - Rüzgar	GCS	Uniform	0,371	1.000	Length		0,000
LF512	PL112	Wind	Y	0,371	0.000	Rela	From start	0,000
	Wy - Rüzgar	GCS	Uniform	0,371	1.000	Length		0,000
LF513	PL114	Wind	Y	0,371	0.000	Rela	From start	0,000
	Wy - Rüzgar	GCS	Uniform	0,371	1.000	Length		0,000
LF514	PL116	Wind	Y	0,371	0.000	Rela	From start	0,000
	Wy - Rüzgar	GCS	Uniform	0,371	1.000	Length		0,000
LF515	PL118	Wind	Y	0,371	0.000	Rela	From start	0,000
	Wy - Rüzgar	GCS	Uniform	0,371	1.000	Length		0,000
LF516	PL120	Wind	Y	0,371	0.000	Rela	From start	0,000
	Wy - Rüzgar	GCS	Uniform	0,371	1.000	Length		0,000
LF517	PL122	Wind	Y	0,380	0.000	Rela	From start	0,000
	Wy - Rüzgar	GCS	Uniform	0,380	1.000	Length		0,000
LF518	PL124	Wind	Y	0,380	0.000	Rela	From start	0,000
	Wy - Rüzgar	GCS	Uniform	0,380	1.000	Length		0,000
LF519	PL126	Wind	Y	0,380	0.000	Rela	From start	0,000
	Wy - Rüzgar	GCS	Uniform	0,380	1.000	Length		0,000
LF520	PL128	Wind	Y	0,380	0.000	Rela	From start	0,000
	Wy - Rüzgar	GCS	Uniform	0,380	1.000	Length		0,000
LF521	PL130	Wind	Y	0,380	0.000	Rela	From start	0,000
	Wy - Rüzgar	GCS	Uniform	0,380	1.000	Length		0,000
LF522	PL132	Wind	Y	0,380	0.000	Rela	From start	0,000
	Wy - Rüzgar	GCS	Uniform	0,380	1.000	Length		0,000
LF523	PL134	Wind	Y	0,380	0.000	Rela	From start	0,000
	Wy - Rüzgar	GCS	Uniform	0,380	1.000	Length		0,000
LF524	PL136	Wind	Y	0,380	0.000	Rela	From start	0,000
	Wy - Rüzgar	GCS	Uniform	0,380	1.000	Length		0,000
LF525	PL138	Wind	Y	0,380	0.000	Rela	From start	0,000
	Wy - Rüzgar	GCS	Uniform	0,380	1.000	Length		0,000

Name	Member Load case	Type System	Dir Distribution	Value - P_1 [kN/m] Value - P_2 [kN/m]	Pos x_1 Pos x_2	Coor Loc	Orig	Ecc ey Ecc ez
LF526	PL140	Wind	Y	0,380	0.000	Rela	From start	0,000
	Wy - Rüzgar	GCS	Uniform	0,380	1.000	Length		0,000
LF527	PL142	Wind	Y	0,390	0.000	Rela	From start	0,000
	Wy - Rüzgar	GCS	Uniform	0,390	1.000	Length		0,000
LF528	PL144	Wind	Y	0,390	0.000	Rela	From start	0,000
	Wy - Rüzgar	GCS	Uniform	0,390	1.000	Length		0,000
LF529	PL146	Wind	Y	0,390	0.000	Rela	From start	0,000
	Wy - Rüzgar	GCS	Uniform	0,390	1.000	Length		0,000
LF530	PL148	Wind	Y	0,390	0.000	Rela	From start	0,000
	Wy - Rüzgar	GCS	Uniform	0,390	1.000	Length		0,000
LF531	PL150	Wind	Y	0,390	0.000	Rela	From start	0,000
	Wy - Rüzgar	GCS	Uniform	0,390	1.000	Length		0,000
LF532	PL152	Wind	Y	0,390	0.000	Rela	From start	0,000
	Wy - Rüzgar	GCS	Uniform	0,390	1.000	Length		0,000
LF533	PL154	Wind	Y	0,390	0.000	Rela	From start	0,000
	Wy - Rüzgar	GCS	Uniform	0,390	1.000	Length		0,000
LF534	PL156	Wind	Y	0,390	0.000	Rela	From start	0,000
	Wy - Rüzgar	GCS	Uniform	0,390	1.000	Length		0,000
LF535	PL158	Wind	Y	0,390	0.000	Rela	From start	0,000
	Wy - Rüzgar	GCS	Uniform	0,390	1.000	Length		0,000
LF536	PL160	Wind	Y	0,390	0.000	Rela	From start	0,000
	Wy - Rüzgar	GCS	Uniform	0,390	1.000	Length		0,000
LF537	PL162	Wind	Y	0,400	0.000	Rela	From start	0,000
	Wy - Rüzgar	GCS	Uniform	0,400	1.000	Length		0,000
LF538	PL164	Wind	Y	0,400	0.000	Rela	From start	0,000
	Wy - Rüzgar	GCS	Uniform	0,400	1.000	Length		0,000
LF539	PL166	Wind	Y	0,400	0.000	Rela	From start	0,000
	Wy - Rüzgar	GCS	Uniform	0,400	1.000	Length		0,000
LF540	PL168	Wind	Y	0,400	0.000	Rela	From start	0,000
	Wy - Rüzgar	GCS	Uniform	0,400	1.000	Length		0,000
LF541	PL170	Wind	Y	0,400	0.000	Rela	From start	0,000
	Wy - Rüzgar	GCS	Uniform	0,400	1.000	Length		0,000
LF542	PL172	Wind	Y	0,400	0.000	Rela	From start	0,000
	Wy - Rüzgar	GCS	Uniform	0,400	1.000	Length		0,000
LF543	PL174	Wind	Y	0,400	0.000	Rela	From start	0,000
	Wy - Rüzgar	GCS	Uniform	0,400	1.000	Length		0,000
LF544	PL176	Wind	Y	0,400	0.000	Rela	From start	0,000
	Wy - Rüzgar	GCS	Uniform	0,400	1.000	Length		0,000
LF545	PL178	Wind	Y	0,400	0.000	Rela	From start	0,000
	Wy - Rüzgar	GCS	Uniform	0,400	1.000	Length		0,000
LF546	PL180	Wind	Y	0,400	0.000	Rela	From start	0,000
	Wy - Rüzgar	GCS	Uniform	0,400	1.000	Length		0,000
LF547	PL182	Wind	Y	0,429	0.000	Rela	From start	0,000
	Wy - Rüzgar	GCS	Uniform	0,429	1.000	Length		0,000
LF548	PL184	Wind	Y	0,429	0.000	Rela	From start	0,000
	Wy - Rüzgar	GCS	Uniform	0,429	1.000	Length		0,000
LF549	PL186	Wind	Y	0,429	0.000	Rela	From start	0,000
	Wy - Rüzgar	GCS	Uniform	0,429	1.000	Length		0,000
LF550	PL188	Wind	Y	0,429	0.000	Rela	From start	0,000
	Wy - Rüzgar	GCS	Uniform	0,429	1.000	Length		0,000
LF551	PL190	Wind	Y	0,429	0.000	Rela	From start	0,000
	Wy - Rüzgar	GCS	Uniform	0,429	1.000	Length		0,000
LF552	PL192	Wind	Y	0,429	0.000	Rela	From start	0,000
	Wy - Rüzgar	GCS	Uniform	0,429	1.000	Length		0,000
LF553	PL194	Wind	Y	0,429	0.000	Rela	From start	0,000
	Wy - Rüzgar	GCS	Uniform	0,429	1.000	Length		0,000
LF554	PL196	Wind	Y	0,429	0.000	Rela	From start	0,000
	Wy - Rüzgar	GCS	Uniform	0,429	1.000	Length		0,000
LF555	PL198	Wind	Y	0,429	0.000	Rela	From start	0,000
	Wy - Rüzgar	GCS	Uniform	0,429	1.000	Length		0,000
LF556	PL200	Wind	Y	0,429	0.000	Rela	From start	0,000
	Wy - Rüzgar	GCS	Uniform	0,429	1.000	Length		0,000
LF557	PL202	Wind	Y	0,429	0.000	Rela	From start	0,000
	Wy - Rüzgar	GCS	Uniform	0,429	1.000	Length		0,000
LF558	PL204	Wind	Y	0,429	0.000	Rela	From start	0,000
	Wy - Rüzgar	GCS	Uniform	0,429	1.000	Length		0,000
LF559	PL206	Wind	Y	0,429	0.000	Rela	From start	0,000
	Wy - Rüzgar	GCS	Uniform	0,429	1.000	Length		0,000
LF560	PL208	Wind	Y	0,429	0.000	Rela	From start	0,000
	Wy - Rüzgar	GCS	Uniform	0,429	1.000	Length		0,000
LF561	PL210	Wind	Y	0,429	0.000	Rela	From start	0,000
	Wy - Rüzgar	GCS	Uniform	0,429	1.000	Length		0,000
LF562	PL212	Wind	Y	0,429	0.000	Rela	From start	0,000
	Wy - Rüzgar	GCS	Uniform	0,429	1.000	Length		0,000

Name	Member Load case	Type System	Dir Distribution	Value - P_1 [kN/m] Value - P_2 [kN/m]	Pos x_1 Pos x_2	Coor Loc	Orig	Ecc ey Ecc ez
LF563	PL214	Wind	Y	0,429	0.000	Rela	From start	0,000
	Wy - Rüzgar	GCS	Uniform	0,429	1.000	Length		0,000
LF564	PL216	Wind	Y	0,429	0.000	Rela	From start	0,000
	Wy - Rüzgar	GCS	Uniform	0,429	1.000	Length		0,000
LF565	PL218	Wind	Y	0,429	0.000	Rela	From start	0,000
	Wy - Rüzgar	GCS	Uniform	0,429	1.000	Length		0,000
LF566	PL220	Wind	Y	0,429	0.000	Rela	From start	0,000
	Wy - Rüzgar	GCS	Uniform	0,429	1.000	Length		0,000
LF567	PL222	Wind	Y	0,429	0.000	Rela	From start	0,000
	Wy - Rüzgar	GCS	Uniform	0,429	1.000	Length		0,000
LF568	PL224	Wind	Y	0,429	0.000	Rela	From start	0,000
	Wy - Rüzgar	GCS	Uniform	0,429	1.000	Length		0,000
LF569	PL226	Wind	Y	0,429	0.000	Rela	From start	0,000
	Wy - Rüzgar	GCS	Uniform	0,429	1.000	Length		0,000
LF570	PL228	Wind	Y	0,429	0.000	Rela	From start	0,000
	Wy - Rüzgar	GCS	Uniform	0,429	1.000	Length		0,000
LF571	PL230	Wind	Y	0,429	0.000	Rela	From start	0,000
	Wy - Rüzgar	GCS	Uniform	0,429	1.000	Length		0,000
LF572	PL232	Wind	Y	0,429	0.000	Rela	From start	0,000
	Wy - Rüzgar	GCS	Uniform	0,429	1.000	Length		0,000
LF573	PL234	Wind	Y	0,429	0.000	Rela	From start	0,000
	Wy - Rüzgar	GCS	Uniform	0,429	1.000	Length		0,000
LF574	PL236	Wind	Y	0,429	0.000	Rela	From start	0,000
	Wy - Rüzgar	GCS	Uniform	0,429	1.000	Length		0,000
LF575	PL238	Wind	Y	0,429	0.000	Rela	From start	0,000
	Wy - Rüzgar	GCS	Uniform	0,429	1.000	Length		0,000
LF576	PL240	Wind	Y	0,429	0.000	Rela	From start	0,000
	Wy - Rüzgar	GCS	Uniform	0,429	1.000	Length		0,000
LF577	B24	Wind	X	0,069	0.000	Rela	From start	0,000
	Wx - Rüzgar	GCS	Uniform	0,069	1.000	Length		0,000
LF578	B12	Wind	X	0,069	0.000	Rela	From start	0,000
	Wx - Rüzgar	GCS	Uniform	0,069	1.000	Length		0,000
LF579	B23	Wind	X	0,069	0.000	Rela	From start	0,000
	Wx - Rüzgar	GCS	Uniform	0,069	1.000	Length		0,000
LF580	B11	Wind	X	0,069	0.000	Rela	From start	0,000
	Wx - Rüzgar	GCS	Uniform	0,069	1.000	Length		0,000
LF581	B22	Wind	X	0,069	0.000	Rela	From start	0,000
	Wx - Rüzgar	GCS	Uniform	0,069	1.000	Length		0,000
LF582	B10	Wind	X	0,069	0.000	Rela	From start	0,000
	Wx - Rüzgar	GCS	Uniform	0,069	1.000	Length		0,000
LF583	B21	Wind	X	0,062	0.000	Rela	From start	0,000
	Wx - Rüzgar	GCS	Uniform	0,064	1.000	Length		0,000
LF584	B9	Wind	X	0,062	0.000	Rela	From start	0,000
	Wx - Rüzgar	GCS	Uniform	0,064	1.000	Length		0,000
LF585	B20	Wind	X	0,061	0.000	Rela	From start	0,000
	Wx - Rüzgar	GCS	Uniform	0,062	1.000	Length		0,000
LF586	B8	Wind	X	0,061	0.000	Rela	From start	0,000
	Wx - Rüzgar	GCS	Uniform	0,062	1.000	Length		0,000
LF587	B19	Wind	X	0,059	0.000	Rela	From start	0,000
	Wx - Rüzgar	GCS	Uniform	0,061	1.000	Length		0,000
LF588	B7	Wind	X	0,059	0.000	Rela	From start	0,000
	Wx - Rüzgar	GCS	Uniform	0,061	1.000	Length		0,000
LF589	B18	Wind	X	0,058	0.000	Rela	From start	0,000
	Wx - Rüzgar	GCS	Uniform	0,059	1.000	Length		0,000
LF590	B6	Wind	X	0,058	0.000	Rela	From start	0,000
	Wx - Rüzgar	GCS	Uniform	0,059	1.000	Length		0,000
LF591	B17	Wind	X	0,056	0.000	Rela	From start	0,000
	Wx - Rüzgar	GCS	Uniform	0,058	1.000	Length		0,000
LF592	B5	Wind	X	0,056	0.000	Rela	From start	0,000
	Wx - Rüzgar	GCS	Uniform	0,058	1.000	Length		0,000
LF593	B16	Wind	X	0,055	0.000	Rela	From start	0,000
	Wx - Rüzgar	GCS	Uniform	0,056	1.000	Length		0,000
LF594	B4	Wind	X	0,055	0.000	Rela	From start	0,000
	Wx - Rüzgar	GCS	Uniform	0,056	1.000	Length		0,000
LF595	B15	Wind	X	0,053	0.000	Rela	From start	0,000
	Wx - Rüzgar	GCS	Uniform	0,055	1.000	Length		0,000
LF596	B3	Wind	X	0,053	0.000	Rela	From start	0,000
	Wx - Rüzgar	GCS	Uniform	0,055	1.000	Length		0,000
LF597	B14	Wind	X	0,051	0.000	Rela	From start	0,000
	Wx - Rüzgar	GCS	Uniform	0,053	1.000	Length		0,000
LF598	B2	Wind	X	0,051	0.000	Rela	From start	0,000
	Wx - Rüzgar	GCS	Uniform	0,053	1.000	Length		0,000
LF599	B13	Wind	X	0,050	0.000	Rela	From start	0,000
	Wx - Rüzgar	GCS	Uniform	0,051	1.000	Length		0,000

Name	Member Load case	Type System	Dir Distribution	Value - P_1 [kN/m] Value - P_2 [kN/m]	Pos x_1 Pos x_2	Coor Loc	Orig	Ecc ey Ecc ez
LF600	B1	Wind	X	0,050	0.000	Rela	From start	0,000
	Wx - Rüzgar	GCS	Uniform	0,051	1.000	Length		0,000
LF601	B637	Wind	X	0,052	0.000	Rela	From start	0,000
	Wx - Rüzgar	GCS	Uniform	0,052	1.000	Length		0,000
LF602	B648	Wind	X	0,053	0.000	Rela	From start	0,000
	Wx - Rüzgar	GCS	Uniform	0,053	1.000	Length		0,000
LF603	B769	Wind	X	0,055	0.000	Rela	From start	0,000
	Wx - Rüzgar	GCS	Uniform	0,055	1.000	Length		0,000
LF604	B780	Wind	X	0,056	0.000	Rela	From start	0,000
	Wx - Rüzgar	GCS	Uniform	0,056	1.000	Length		0,000
LF605	B791	Wind	X	0,058	0.000	Rela	From start	0,000
	Wx - Rüzgar	GCS	Uniform	0,058	1.000	Length		0,000
LF606	B802	Wind	X	0,059	0.000	Rela	From start	0,000
	Wx - Rüzgar	GCS	Uniform	0,059	1.000	Length		0,000
LF607	B813	Wind	X	0,061	0.000	Rela	From start	0,000
	Wx - Rüzgar	GCS	Uniform	0,061	1.000	Length		0,000
LF608	B824	Wind	X	0,062	0.000	Rela	From start	0,000
	Wx - Rüzgar	GCS	Uniform	0,062	1.000	Length		0,000
LF609	B835	Wind	X	0,069	0.000	Rela	From start	0,000
	Wx - Rüzgar	GCS	Uniform	0,069	1.000	Length		0,000
LF610	B846	Wind	X	0,069	0.000	Rela	From start	0,000
	Wx - Rüzgar	GCS	Uniform	0,069	1.000	Length		0,000
LF611	B857	Wind	X	0,069	0.000	Rela	From start	0,000
	Wx - Rüzgar	GCS	Uniform	0,069	1.000	Length		0,000
LF612	B193	Wind	X	0,043	0.000	Rela	From start	0,000
	Wx - Rüzgar	GCS	Uniform	0,043	1.000	Length		0,000
LF613	B194	Wind	X	0,044	0.000	Rela	From start	0,000
	Wx - Rüzgar	GCS	Uniform	0,044	1.000	Length		0,000
LF614	B195	Wind	X	0,046	0.000	Rela	From start	0,000
	Wx - Rüzgar	GCS	Uniform	0,046	1.000	Length		0,000
LF615	B196	Wind	X	0,047	0.000	Rela	From start	0,000
	Wx - Rüzgar	GCS	Uniform	0,047	1.000	Length		0,000
LF616	B197	Wind	X	0,048	0.000	Rela	From start	0,000
	Wx - Rüzgar	GCS	Uniform	0,048	1.000	Length		0,000
LF617	B198	Wind	X	0,049	0.000	Rela	From start	0,000
	Wx - Rüzgar	GCS	Uniform	0,049	1.000	Length		0,000
LF618	B199	Wind	X	0,051	0.000	Rela	From start	0,000
	Wx - Rüzgar	GCS	Uniform	0,051	1.000	Length		0,000
LF619	B200	Wind	X	0,052	0.000	Rela	From start	0,000
	Wx - Rüzgar	GCS	Uniform	0,052	1.000	Length		0,000
LF620	B201	Wind	X	0,053	0.000	Rela	From start	0,000
	Wx - Rüzgar	GCS	Uniform	0,053	1.000	Length		0,000
LF621	B202	Wind	X	0,057	0.000	Rela	From start	0,000
	Wx - Rüzgar	GCS	Uniform	0,057	1.000	Length		0,000
LF622	B203	Wind	X	0,057	0.000	Rela	From start	0,000
	Wx - Rüzgar	GCS	Uniform	0,057	1.000	Length		0,000
LF623	B204	Wind	X	0,057	0.000	Rela	From start	0,000
	Wx - Rüzgar	GCS	Uniform	0,057	1.000	Length		0,000
LF624	PL202	Force	Y	0,104	0.000	Rela	From start	0,000
	Wy_çalışma - Rüzgar	GCS	Uniform		1.000	Length		0,000
LF625	PL204	Force	Y	0,104	0.000	Rela	From start	0,000
	Wy_çalışma - Rüzgar	GCS	Uniform		1.000	Length		0,000
LF626	PL206	Force	Y	0,104	0.000	Rela	From start	0,000
	Wy_çalışma - Rüzgar	GCS	Uniform		1.000	Length		0,000
LF627	PL208	Force	Y	0,104	0.000	Rela	From start	0,000
	Wy_çalışma - Rüzgar	GCS	Uniform		1.000	Length		0,000
LF628	PL210	Force	Y	0,104	0.000	Rela	From start	0,000
	Wy_çalışma - Rüzgar	GCS	Uniform		1.000	Length		0,000
LF629	PL212	Force	Y	0,104	0.000	Rela	From start	0,000
	Wy_çalışma - Rüzgar	GCS	Uniform		1.000	Length		0,000
LF630	PL214	Force	Y	0,104	0.000	Rela	From start	0,000
	Wy_çalışma - Rüzgar	GCS	Uniform		1.000	Length		0,000
LF631	PL216	Force	Y	0,104	0.000	Rela	From start	0,000
	Wy_çalışma - Rüzgar	GCS	Uniform		1.000	Length		0,000
LF632	PL218	Force	Y	0,104	0.000	Rela	From start	0,000
	Wy_çalışma - Rüzgar	GCS	Uniform		1.000	Length		0,000
LF633	PL220	Force	Y	0,104	0.000	Rela	From start	0,000
	Wy_çalışma - Rüzgar	GCS	Uniform		1.000	Length		0,000
LF634	PL222	Force	Y	0,104	0.000	Rela	From start	0,000
	Wy_çalışma - Rüzgar	GCS	Uniform		1.000	Length		0,000
LF635	PL224	Force	Y	0,104	0.000	Rela	From start	0,000
	Wy_çalışma - Rüzgar	GCS	Uniform		1.000	Length		0,000
LF636	PL226	Force	Y	0,104	0.000	Rela	From start	0,000
	Wy_çalışma - Rüzgar	GCS	Uniform		1.000	Length		0,000

Name	Member Load case	Type System	Dir Distribution	Value - P_1 [kN/m] Value - P_2 [kN/m]	Pos x_1 Pos x_2	Coor Loc	Orig	Ecc ey Ecc ez
LF637	PL228	Force	Y	0,104	0.000	Rela	From start	0,000
	Wy_çalışma - Rüzgar	GCS	Uniform		1.000	Length		0,000
LF638	PL230	Force	Y	0,104	0.000	Rela	From start	0,000
	Wy_çalışma - Rüzgar	GCS	Uniform		1.000	Length		0,000
LF639	PL232	Force	Y	0,104	0.000	Rela	From start	0,000
	Wy_çalışma - Rüzgar	GCS	Uniform		1.000	Length		0,000
LF640	PL234	Force	Y	0,104	0.000	Rela	From start	0,000
	Wy_çalışma - Rüzgar	GCS	Uniform		1.000	Length		0,000
LF641	PL236	Force	Y	0,104	0.000	Rela	From start	0,000
	Wy_çalışma - Rüzgar	GCS	Uniform		1.000	Length		0,000
LF642	PL238	Force	Y	0,104	0.000	Rela	From start	0,000
	Wy_çalışma - Rüzgar	GCS	Uniform		1.000	Length		0,000
LF643	PL240	Force	Y	0,104	0.000	Rela	From start	0,000
	Wy_çalışma - Rüzgar	GCS	Uniform		1.000	Length		0,000
LF644	PL182	Force	Y	0,104	0.000	Rela	From start	0,000
	Wy_çalışma - Rüzgar	GCS	Uniform		1.000	Length		0,000
LF645	PL184	Force	Y	0,104	0.000	Rela	From start	0,000
	Wy_çalışma - Rüzgar	GCS	Uniform		1.000	Length		0,000
LF646	PL186	Force	Y	0,104	0.000	Rela	From start	0,000
	Wy_çalışma - Rüzgar	GCS	Uniform		1.000	Length		0,000
LF647	PL188	Force	Y	0,104	0.000	Rela	From start	0,000
	Wy_çalışma - Rüzgar	GCS	Uniform		1.000	Length		0,000
LF648	PL190	Force	Y	0,104	0.000	Rela	From start	0,000
	Wy_çalışma - Rüzgar	GCS	Uniform		1.000	Length		0,000
LF649	PL192	Force	Y	0,104	0.000	Rela	From start	0,000
	Wy_çalışma - Rüzgar	GCS	Uniform		1.000	Length		0,000
LF650	PL194	Force	Y	0,104	0.000	Rela	From start	0,000
	Wy_çalışma - Rüzgar	GCS	Uniform		1.000	Length		0,000
LF651	PL196	Force	Y	0,104	0.000	Rela	From start	0,000
	Wy_çalışma - Rüzgar	GCS	Uniform		1.000	Length		0,000
LF652	PL198	Force	Y	0,104	0.000	Rela	From start	0,000
	Wy_çalışma - Rüzgar	GCS	Uniform		1.000	Length		0,000
LF653	PL200	Force	Y	0,104	0.000	Rela	From start	0,000
	Wy_çalışma - Rüzgar	GCS	Uniform		1.000	Length		0,000
LF654	B12	Force	Y	0,012	0.000	Rela	From start	0,000
	Wy_çalışma - Rüzgar	GCS	Uniform		1.000	Length		0,000
LF655	B11	Force	Y	0,012	0.000	Rela	From start	0,000
	Wy_çalışma - Rüzgar	GCS	Uniform		1.000	Length		0,000
LF656	B36	Force	Y	0,012	0.000	Rela	From start	0,000
	Wy_çalışma - Rüzgar	GCS	Uniform		1.000	Length		0,000
LF657	B35	Force	Y	0,012	0.000	Rela	From start	0,000
	Wy_çalışma - Rüzgar	GCS	Uniform		1.000	Length		0,000
LF658	B60	Force	Y	0,012	0.000	Rela	From start	0,000
	Wy_çalışma - Rüzgar	GCS	Uniform		1.000	Length		0,000
LF659	B59	Force	Y	0,012	0.000	Rela	From start	0,000
	Wy_çalışma - Rüzgar	GCS	Uniform		1.000	Length		0,000
LF660	B84	Force	Y	0,012	0.000	Rela	From start	0,000
	Wy_çalışma - Rüzgar	GCS	Uniform		1.000	Length		0,000
LF661	B83	Force	Y	0,012	0.000	Rela	From start	0,000
	Wy_çalışma - Rüzgar	GCS	Uniform		1.000	Length		0,000
LF662	B108	Force	Y	0,012	0.000	Rela	From start	0,000
	Wy_çalışma - Rüzgar	GCS	Uniform		1.000	Length		0,000
LF663	B107	Force	Y	0,012	0.000	Rela	From start	0,000
	Wy_çalışma - Rüzgar	GCS	Uniform		1.000	Length		0,000
LF664	B131	Force	Y	0,012	0.000	Rela	From start	0,000
	Wy_çalışma - Rüzgar	GCS	Uniform		1.000	Length		0,000
LF665	B132	Force	Y	0,012	0.000	Rela	From start	0,000
	Wy_çalışma - Rüzgar	GCS	Uniform		1.000	Length		0,000
LF666	B156	Force	Y	0,012	0.000	Rela	From start	0,000
	Wy_çalışma - Rüzgar	GCS	Uniform		1.000	Length		0,000
LF667	B155	Force	Y	0,012	0.000	Rela	From start	0,000
	Wy_çalışma - Rüzgar	GCS	Uniform		1.000	Length		0,000
LF668	B180	Force	Y	0,012	0.000	Rela	From start	0,000
	Wy_çalışma - Rüzgar	GCS	Uniform		1.000	Length		0,000
LF669	B179	Force	Y	0,012	0.000	Rela	From start	0,000
	Wy_çalışma - Rüzgar	GCS	Uniform		1.000	Length		0,000
LF670	B467	Force	Y	0,012	0.000	Rela	From start	0,000
	Wy_çalışma - Rüzgar	GCS	Uniform		1.000	Length		0,000
LF671	B468	Force	Y	0,012	0.000	Rela	From start	0,000
	Wy_çalışma - Rüzgar	GCS	Uniform		1.000	Length		0,000
LF672	B528	Force	Y	0,012	0.000	Rela	From start	0,000
	Wy_çalışma - Rüzgar	GCS	Uniform		1.000	Length		0,000
LF673	B527	Force	Y	0,012	0.000	Rela	From start	0,000
	Wy_çalışma - Rüzgar	GCS	Uniform		1.000	Length		0,000

Name	Member Load case	Type System	Dir Distribution	Value - P_1 [kN/m] Value - P_2 [kN/m]	Pos x_1 Pos x_2	Coor Loc	Orig	Ecc ey Ecc ez
LF674	B588	Force	Y	0,012	0.000	Rela	From start	0,000
	Wy_çalışma - Rüzgar	GCS	Uniform		1.000	Length		0,000
LF675	B587	Force	Y	0,012	0.000	Rela	From start	0,000
	Wy_çalışma - Rüzgar	GCS	Uniform		1.000	Length		0,000
LF676	B1068	Force	Y	0,012	0.000	Rela	From start	0,000
	Wy_çalışma - Rüzgar	GCS	Uniform		1.000	Length		0,000
LF677	B1069	Force	Y	0,012	0.000	Rela	From start	0,000
	Wy_çalışma - Rüzgar	GCS	Uniform		1.000	Length		0,000
LF678	B1070	Force	Y	0,012	0.000	Rela	From start	0,000
	Wy_çalışma - Rüzgar	GCS	Uniform		1.000	Length		0,000
LF679	B1071	Force	Y	0,012	0.000	Rela	From start	0,000
	Wy_çalışma - Rüzgar	GCS	Uniform		1.000	Length		0,000
LF680	B1072	Force	Y	0,012	0.000	Rela	From start	0,000
	Wy_çalışma - Rüzgar	GCS	Uniform		1.000	Length		0,000
LF681	B1073	Force	Y	0,012	0.000	Rela	From start	0,000
	Wy_çalışma - Rüzgar	GCS	Uniform		1.000	Length		0,000
LF682	B1074	Force	Y	0,012	0.000	Rela	From start	0,000
	Wy_çalışma - Rüzgar	GCS	Uniform		1.000	Length		0,000
LF683	B1075	Force	Y	0,012	0.000	Rela	From start	0,000
	Wy_çalışma - Rüzgar	GCS	Uniform		1.000	Length		0,000
LF684	B1076	Force	Y	0,012	0.000	Rela	From start	0,000
	Wy_çalışma - Rüzgar	GCS	Uniform		1.000	Length		0,000
LF685	B1077	Force	Y	0,012	0.000	Rela	From start	0,000
	Wy_çalışma - Rüzgar	GCS	Uniform		1.000	Length		0,000
LF686	B1078	Force	Y	0,012	0.000	Rela	From start	0,000
	Wy_çalışma - Rüzgar	GCS	Uniform		1.000	Length		0,000
LF687	B1079	Force	Y	0,012	0.000	Rela	From start	0,000
	Wy_çalışma - Rüzgar	GCS	Uniform		1.000	Length		0,000
LF688	B1080	Force	Y	0,012	0.000	Rela	From start	0,000
	Wy_çalışma - Rüzgar	GCS	Uniform		1.000	Length		0,000
LF689	B1081	Force	Y	0,012	0.000	Rela	From start	0,000
	Wy_çalışma - Rüzgar	GCS	Uniform		1.000	Length		0,000
LF690	B1082	Force	Y	0,012	0.000	Rela	From start	0,000
	Wy_çalışma - Rüzgar	GCS	Uniform		1.000	Length		0,000
LF691	B1083	Force	Y	0,012	0.000	Rela	From start	0,000
	Wy_çalışma - Rüzgar	GCS	Uniform		1.000	Length		0,000
LF692	B1084	Force	Y	0,012	0.000	Rela	From start	0,000
	Wy_çalışma - Rüzgar	GCS	Uniform		1.000	Length		0,000
LF693	B1085	Force	Y	0,012	0.000	Rela	From start	0,000
	Wy_çalışma - Rüzgar	GCS	Uniform		1.000	Length		0,000
LF694	B1086	Force	Y	0,012	0.000	Rela	From start	0,000
	Wy_çalışma - Rüzgar	GCS	Uniform		1.000	Length		0,000
LF695	B1087	Force	Y	0,012	0.000	Rela	From start	0,000
	Wy_çalışma - Rüzgar	GCS	Uniform		1.000	Length		0,000
LF696	B1048	Force	Y	0,012	0.000	Rela	From start	0,000
	Wy_çalışma - Rüzgar	GCS	Uniform		1.000	Length		0,000
LF697	B1049	Force	Y	0,012	0.000	Rela	From start	0,000
	Wy_çalışma - Rüzgar	GCS	Uniform		1.000	Length		0,000
LF698	B1050	Force	Y	0,012	0.000	Rela	From start	0,000
	Wy_çalışma - Rüzgar	GCS	Uniform		1.000	Length		0,000
LF699	B1051	Force	Y	0,012	0.000	Rela	From start	0,000
	Wy_çalışma - Rüzgar	GCS	Uniform		1.000	Length		0,000
LF700	B1052	Force	Y	0,012	0.000	Rela	From start	0,000
	Wy_çalışma - Rüzgar	GCS	Uniform		1.000	Length		0,000
LF701	B1053	Force	Y	0,012	0.000	Rela	From start	0,000
	Wy_çalışma - Rüzgar	GCS	Uniform		1.000	Length		0,000
LF702	B1054	Force	Y	0,012	0.000	Rela	From start	0,000
	Wy_çalışma - Rüzgar	GCS	Uniform		1.000	Length		0,000
LF703	B1055	Force	Y	0,012	0.000	Rela	From start	0,000
	Wy_çalışma - Rüzgar	GCS	Uniform		1.000	Length		0,000
LF704	B1056	Force	Y	0,012	0.000	Rela	From start	0,000
	Wy_çalışma - Rüzgar	GCS	Uniform		1.000	Length		0,000
LF705	B1057	Force	Y	0,012	0.000	Rela	From start	0,000
	Wy_çalışma - Rüzgar	GCS	Uniform		1.000	Length		0,000
LF706	B1058	Force	Y	0,012	0.000	Rela	From start	0,000
	Wy_çalışma - Rüzgar	GCS	Uniform		1.000	Length		0,000
LF707	B1059	Force	Y	0,012	0.000	Rela	From start	0,000
	Wy_çalışma - Rüzgar	GCS	Uniform		1.000	Length		0,000
LF708	B1060	Force	Y	0,012	0.000	Rela	From start	0,000
	Wy_çalışma - Rüzgar	GCS	Uniform		1.000	Length		0,000
LF709	B1061	Force	Y	0,012	0.000	Rela	From start	0,000
	Wy_çalışma - Rüzgar	GCS	Uniform		1.000	Length		0,000
LF710	B1062	Force	Y	0,012	0.000	Rela	From start	0,000
	Wy_çalışma - Rüzgar	GCS	Uniform		1.000	Length		0,000

Name	Member Load case	Type System	Dir Distribution	Value - P_1 [kN/m] Value - P_2 [kN/m]	Pos x_1 Pos x_2	Coor Loc	Orig	Ecc ey Ecc ez
LF711	B1063	Force	Y	0,012	0.000	Rela	From start	0,000
	Wy_çalışma - Rüzgar	GCS	Uniform		1.000	Length		0,000
LF712	B1064	Force	Y	0,012	0.000	Rela	From start	0,000
	Wy_çalışma - Rüzgar	GCS	Uniform		1.000	Length		0,000
LF713	B1065	Force	Y	0,012	0.000	Rela	From start	0,000
	Wy_çalışma - Rüzgar	GCS	Uniform		1.000	Length		0,000
LF714	B1066	Force	Y	0,012	0.000	Rela	From start	0,000
	Wy_çalışma - Rüzgar	GCS	Uniform		1.000	Length		0,000
LF715	B1067	Force	Y	0,012	0.000	Rela	From start	0,000
	Wy_çalışma - Rüzgar	GCS	Uniform		1.000	Length		0,000
LF720	B24	Force	X	0,012	0.000	Rela	From start	0,000
	Wx_Çalışma - Rüzgar	GCS	Uniform		1.000	Length		0,000
LF721	B12	Force	X	0,012	0.000	Rela	From start	0,000
	Wx_Çalışma - Rüzgar	GCS	Uniform		1.000	Length		0,000
LF722	B23	Force	X	0,012	0.000	Rela	From start	0,000
	Wx_Çalışma - Rüzgar	GCS	Uniform		1.000	Length		0,000
LF723	B11	Force	X	0,012	0.000	Rela	From start	0,000
	Wx_Çalışma - Rüzgar	GCS	Uniform		1.000	Length		0,000
LF724	B846	Force	X	0,012	0.000	Rela	From start	0,000
	Wx_Çalışma - Rüzgar	GCS	Uniform		1.000	Length		0,000
LF725	B857	Force	X	0,012	0.000	Rela	From start	0,000
	Wx_Çalışma - Rüzgar	GCS	Uniform		1.000	Length		0,000
LF726	B202	Force	X	0,104	0.000	Rela	From start	0,000
	Wx_Çalışma - Rüzgar	GCS	Uniform		1.000	Length		0,000
LF727	B203	Force	X	0,104	0.000	Rela	From start	0,000
	Wx_Çalışma - Rüzgar	GCS	Uniform		1.000	Length		0,000
LF728	B204	Force	X	0,104	0.000	Rela	From start	0,000
	Wx_Çalışma - Rüzgar	GCS	Uniform		1.000	Length		0,000
LF729	B1088	Wind	X	0,000	0.000	Rela	From start	0,000
	Wx - Rüzgar	GCS	Uniform	0,000	1.000	Length		0,000
LF730	PL242	Wind	Y	0,000	0.000	Rela	From start	0,000
	Wy - Rüzgar	GCS	Uniform	0,000	1.000	Length		0,000
LF731	PL244	Wind	Y	0,000	0.000	Rela	From start	0,000
	Wy - Rüzgar	GCS	Uniform	0,000	1.000	Length		0,000
LF732	PL246	Wind	Y	0,000	0.000	Rela	From start	0,000
	Wy - Rüzgar	GCS	Uniform	0,000	1.000	Length		0,000
LF733	PL248	Wind	Y	0,000	0.000	Rela	From start	0,000
	Wy - Rüzgar	GCS	Uniform	0,000	1.000	Length		0,000
LF734	PL250	Wind	Y	0,000	0.000	Rela	From start	0,000
	Wy - Rüzgar	GCS	Uniform	0,000	1.000	Length		0,000
LF735	PL252	Wind	Y	0,000	0.000	Rela	From start	0,000
	Wy - Rüzgar	GCS	Uniform	0,000	1.000	Length		0,000
LF736	PL254	Wind	Y	0,000	0.000	Rela	From start	0,000
	Wy - Rüzgar	GCS	Uniform	0,000	1.000	Length		0,000
LF737	PL256	Wind	Y	0,000	0.000	Rela	From start	0,000
	Wy - Rüzgar	GCS	Uniform	0,000	1.000	Length		0,000
LF738	PL258	Wind	Y	0,000	0.000	Rela	From start	0,000
	Wy - Rüzgar	GCS	Uniform	0,000	1.000	Length		0,000
LF739	PL260	Wind	Y	0,000	0.000	Rela	From start	0,000
	Wy - Rüzgar	GCS	Uniform	0,000	1.000	Length		0,000
LF780	PL201	Force	Z	-0,450	0.000	Rela	From start	0,000
	SL1 - Servis yükü %50 (4)	GCS	Uniform		1.000	Length		0,000
LF781	PL202	Force	Z	-0,450	0.000	Rela	From start	0,000
	SL1 - Servis yükü %50 (4)	GCS	Uniform		1.000	Length		0,000
LF782	PL203	Force	Z	-0,450	0.000	Rela	From start	0,000
	SL1 - Servis yükü %50 (4)	GCS	Uniform		1.000	Length		0,000
LF783	PL204	Force	Z	-0,450	0.000	Rela	From start	0,000
	SL1 - Servis yükü %50 (4)	GCS	Uniform		1.000	Length		0,000
LF784	PL205	Force	Z	-0,450	0.000	Rela	From start	0,000
	SL1 - Servis yükü %50 (4)	GCS	Uniform		1.000	Length		0,000
LF785	PL206	Force	Z	-0,450	0.000	Rela	From start	0,000
	SL1 - Servis yükü %50 (4)	GCS	Uniform		1.000	Length		0,000
LF786	PL207	Force	Z	-0,450	0.000	Rela	From start	0,000
	SL1 - Servis yükü %50 (4)	GCS	Uniform		1.000	Length		0,000
LF787	PL208	Force	Z	-0,450	0.000	Rela	From start	0,000
	SL1 - Servis yükü %50 (4)	GCS	Uniform		1.000	Length		0,000
LF788	PL209	Force	Z	-0,450	0.000	Rela	From start	0,000
	SL1 - Servis yükü %50 (4)	GCS	Uniform		1.000	Length		0,000
LF789	PL210	Force	Z	-0,450	0.000	Rela	From start	0,000
	SL1 - Servis yükü %50 (4)	GCS	Uniform		1.000	Length		0,000
LF790	PL211	Force	Z	-0,450	0.000	Rela	From start	0,000
	SL1 - Servis yükü %50 (4)	GCS	Uniform		1.000	Length		0,000
LF791	PL212	Force	Z	-0,450	0.000	Rela	From start	0,000
	SL1 - Servis yükü %50 (4)	GCS	Uniform		1.000	Length		0,000

Name	Member Load case	Type System	Dir Distribution	Value - P_1 [kN/m] Value - P_2 [kN/m]	Pos x_1 Pos x_2	Coor Loc	Orig	Ecc ey Ecc ez
LF792	PL213	Force	Z	-0,450	0.000	Rela	From start	0,000
	SL1 - Servis yükü %50 (4)	GCS	Uniform		1.000	Length		0,000
LF793	PL214	Force	Z	-0,450	0.000	Rela	From start	0,000
	SL1 - Servis yükü %50 (4)	GCS	Uniform		1.000	Length		0,000
LF794	PL215	Force	Z	-0,450	0.000	Rela	From start	0,000
	SL1 - Servis yükü %50 (4)	GCS	Uniform		1.000	Length		0,000
LF795	PL216	Force	Z	-0,450	0.000	Rela	From start	0,000
	SL1 - Servis yükü %50 (4)	GCS	Uniform		1.000	Length		0,000
LF796	PL217	Force	Z	-0,450	0.000	Rela	From start	0,000
	SL1 - Servis yükü %50 (4)	GCS	Uniform		1.000	Length		0,000
LF797	PL218	Force	Z	-0,450	0.000	Rela	From start	0,000
	SL1 - Servis yükü %50 (4)	GCS	Uniform		1.000	Length		0,000
LF798	PL219	Force	Z	-0,450	0.000	Rela	From start	0,000
	SL1 - Servis yükü %50 (4)	GCS	Uniform		1.000	Length		0,000
LF799	PL220	Force	Z	-0,450	0.000	Rela	From start	0,000
	SL1 - Servis yükü %50 (4)	GCS	Uniform		1.000	Length		0,000
LF829	CP50	Wind	Y	0,041	0.000	Rela	From start	0,000
	Wy - Rüzgar	GCS	Uniform	0,040	1.000	Length		0,000
LF836	CP57	Wind	Y	0,045	0.000	Rela	From start	0,000
	Wy - Rüzgar	GCS	Uniform	0,046	1.000	Length		0,000
LF840	CP61	Wind	Y	0,047	0.000	Rela	From start	0,000
	Wy - Rüzgar	GCS	Uniform	0,048	1.000	Length		0,000
LF844	CP65	Wind	Y	0,050	0.000	Rela	From start	0,000
	Wy - Rüzgar	GCS	Uniform	0,050	1.000	Length		0,000
LF848	CP69	Wind	Y	0,054	0.000	Rela	From start	0,000
	Wy - Rüzgar	GCS	Uniform	0,054	1.000	Length		0,000
LF872	CP93	Wind	Y	0,042	0.000	Rela	From start	0,000
	Wy - Rüzgar	GCS	Uniform	0,041	1.000	Length		0,000
LF873	CP94	Wind	Y	0,043	0.000	Rela	From start	0,000
	Wy - Rüzgar	GCS	Uniform	0,044	1.000	Length		0,000
LF874	CP95	Wind	Y	0,046	0.000	Rela	From start	0,000
	Wy - Rüzgar	GCS	Uniform	0,047	1.000	Length		0,000
LF875	CP96	Wind	Y	0,048	0.000	Rela	From start	0,000
	Wy - Rüzgar	GCS	Uniform	0,049	1.000	Length		0,000
LF876	CP97	Wind	Y	0,054	0.000	Rela	From start	0,000
	Wy - Rüzgar	GCS	Uniform	0,054	1.000	Length		0,000
LF877	CP98	Wind	Y	0,054	0.000	Rela	From start	0,000
	Wy - Rüzgar	GCS	Uniform	0,054	1.000	Length		0,000
LF878	CP99	Wind	Y	0,041	0.000	Rela	From start	0,000
	Wy - Rüzgar	GCS	Uniform	0,042	1.000	Length		0,000
LF879	CP100	Wind	Y	0,043	0.000	Rela	From start	0,000
	Wy - Rüzgar	GCS	Uniform	0,044	1.000	Length		0,000
LF880	CP101	Wind	Y	0,046	0.000	Rela	From start	0,000
	Wy - Rüzgar	GCS	Uniform	0,047	1.000	Length		0,000
LF881	CP102	Wind	Y	0,048	0.000	Rela	From start	0,000
	Wy - Rüzgar	GCS	Uniform	0,049	1.000	Length		0,000
LF882	CP103	Wind	Y	0,054	0.000	Rela	From start	0,000
	Wy - Rüzgar	GCS	Uniform	0,054	1.000	Length		0,000
LF883	CP104	Wind	Y	0,054	0.000	Rela	From start	0,000
	Wy - Rüzgar	GCS	Uniform	0,054	1.000	Length		0,000
LF884	CP105	Wind	Y	0,042	0.000	Rela	From start	0,000
	Wy - Rüzgar	GCS	Uniform	0,043	1.000	Length		0,000
LF885	CP106	Wind	Y	0,045	0.000	Rela	From start	0,000
	Wy - Rüzgar	GCS	Uniform	0,046	1.000	Length		0,000
LF886	CP107	Wind	Y	0,047	0.000	Rela	From start	0,000
	Wy - Rüzgar	GCS	Uniform	0,048	1.000	Length		0,000
LF887	CP108	Wind	Y	0,050	0.000	Rela	From start	0,000
	Wy - Rüzgar	GCS	Uniform	0,050	1.000	Length		0,000
LF888	CP109	Wind	Y	0,054	0.000	Rela	From start	0,000
	Wy - Rüzgar	GCS	Uniform	0,054	1.000	Length		0,000
LF889	CP110	Wind	Y	0,041	0.000	Rela	From start	0,000
	Wy - Rüzgar	GCS	Uniform	0,040	1.000	Length		0,000
LF890	CP111	Wind	Y	0,041	0.000	Rela	From start	0,000
	Wy - Rüzgar	GCS	Uniform	0,040	1.000	Length		0,000
LF891	CP112	Wind	Y	0,042	0.000	Rela	From start	0,000
	Wy - Rüzgar	GCS	Uniform	0,043	1.000	Length		0,000
LF892	CP113	Wind	Y	0,045	0.000	Rela	From start	0,000
	Wy - Rüzgar	GCS	Uniform	0,046	1.000	Length		0,000
LF893	CP114	Wind	Y	0,047	0.000	Rela	From start	0,000
	Wy - Rüzgar	GCS	Uniform	0,048	1.000	Length		0,000
LF894	CP115	Wind	Y	0,050	0.000	Rela	From start	0,000
	Wy - Rüzgar	GCS	Uniform	0,050	1.000	Length		0,000
LF895	CP116	Wind	Y	0,054	0.000	Rela	From start	0,000
	Wy - Rüzgar	GCS	Uniform	0,054	1.000	Length		0,000

Name	Member Load case	Type System	Dir Distribution	Value - P_1 [kN/m] Value - P_2 [kN/m]	Pos x_1 Pos x_2	Coor Loc	Orig	Ecc ey Ecc ez
LF896	CP117	Wind	Y	0,042	0.000	Rela	From start	0,000
	Wy - Rüzgar	GCS	Uniform	0,041	1.000	Length		0,000
LF897	CP118	Wind	Y	0,043	0.000	Rela	From start	0,000
	Wy - Rüzgar	GCS	Uniform	0,044	1.000	Length		0,000
LF898	CP119	Wind	Y	0,046	0.000	Rela	From start	0,000
	Wy - Rüzgar	GCS	Uniform	0,047	1.000	Length		0,000
LF899	CP120	Wind	Y	0,048	0.000	Rela	From start	0,000
	Wy - Rüzgar	GCS	Uniform	0,049	1.000	Length		0,000
LF900	CP121	Wind	Y	0,054	0.000	Rela	From start	0,000
	Wy - Rüzgar	GCS	Uniform	0,054	1.000	Length		0,000
LF901	CP122	Wind	Y	0,054	0.000	Rela	From start	0,000
	Wy - Rüzgar	GCS	Uniform	0,054	1.000	Length		0,000
LF902	CP123	Wind	Y	0,041	0.000	Rela	From start	0,000
	Wy - Rüzgar	GCS	Uniform	0,042	1.000	Length		0,000
LF903	CP124	Wind	Y	0,043	0.000	Rela	From start	0,000
	Wy - Rüzgar	GCS	Uniform	0,044	1.000	Length		0,000
LF904	CP125	Wind	Y	0,046	0.000	Rela	From start	0,000
	Wy - Rüzgar	GCS	Uniform	0,047	1.000	Length		0,000
LF905	CP126	Wind	Y	0,048	0.000	Rela	From start	0,000
	Wy - Rüzgar	GCS	Uniform	0,049	1.000	Length		0,000
LF906	CP127	Wind	Y	0,054	0.000	Rela	From start	0,000
	Wy - Rüzgar	GCS	Uniform	0,054	1.000	Length		0,000
LF907	CP128	Wind	Y	0,054	0.000	Rela	From start	0,000
	Wy - Rüzgar	GCS	Uniform	0,054	1.000	Length		0,000
LF908	CP129	Wind	Y	0,042	0.000	Rela	From start	0,000
	Wy - Rüzgar	GCS	Uniform	0,043	1.000	Length		0,000
LF909	CP130	Wind	Y	0,045	0.000	Rela	From start	0,000
	Wy - Rüzgar	GCS	Uniform	0,046	1.000	Length		0,000
LF910	CP131	Wind	Y	0,047	0.000	Rela	From start	0,000
	Wy - Rüzgar	GCS	Uniform	0,048	1.000	Length		0,000
LF911	CP132	Wind	Y	0,050	0.000	Rela	From start	0,000
	Wy - Rüzgar	GCS	Uniform	0,050	1.000	Length		0,000
LF912	CP133	Wind	Y	0,054	0.000	Rela	From start	0,000
	Wy - Rüzgar	GCS	Uniform	0,054	1.000	Length		0,000
LF913	CP134	Wind	Y	0,041	0.000	Rela	From start	0,000
	Wy - Rüzgar	GCS	Uniform	0,040	1.000	Length		0,000
LF914	CP135	Wind	Y	0,041	0.000	Rela	From start	0,000
	Wy - Rüzgar	GCS	Uniform	0,040	1.000	Length		0,000
LF915	CP136	Wind	Y	0,042	0.000	Rela	From start	0,000
	Wy - Rüzgar	GCS	Uniform	0,043	1.000	Length		0,000
LF916	CP137	Wind	Y	0,045	0.000	Rela	From start	0,000
	Wy - Rüzgar	GCS	Uniform	0,046	1.000	Length		0,000
LF917	CP138	Wind	Y	0,047	0.000	Rela	From start	0,000
	Wy - Rüzgar	GCS	Uniform	0,048	1.000	Length		0,000
LF918	CP139	Wind	Y	0,050	0.000	Rela	From start	0,000
	Wy - Rüzgar	GCS	Uniform	0,050	1.000	Length		0,000
LF919	CP140	Wind	Y	0,054	0.000	Rela	From start	0,000
	Wy - Rüzgar	GCS	Uniform	0,054	1.000	Length		0,000
LF920	CP141	Wind	Y	0,042	0.000	Rela	From start	0,000
	Wy - Rüzgar	GCS	Uniform	0,041	1.000	Length		0,000
LF921	CP142	Wind	Y	0,043	0.000	Rela	From start	0,000
	Wy - Rüzgar	GCS	Uniform	0,044	1.000	Length		0,000
LF922	CP143	Wind	Y	0,046	0.000	Rela	From start	0,000
	Wy - Rüzgar	GCS	Uniform	0,047	1.000	Length		0,000
LF923	CP144	Wind	Y	0,048	0.000	Rela	From start	0,000
	Wy - Rüzgar	GCS	Uniform	0,049	1.000	Length		0,000
LF924	CP145	Wind	Y	0,054	0.000	Rela	From start	0,000
	Wy - Rüzgar	GCS	Uniform	0,054	1.000	Length		0,000
LF925	CP146	Wind	Y	0,054	0.000	Rela	From start	0,000
	Wy - Rüzgar	GCS	Uniform	0,054	1.000	Length		0,000
LF926	CP147	Wind	Y	0,041	0.000	Rela	From start	0,000
	Wy - Rüzgar	GCS	Uniform	0,042	1.000	Length		0,000
LF927	CP148	Wind	Y	0,043	0.000	Rela	From start	0,000
	Wy - Rüzgar	GCS	Uniform	0,044	1.000	Length		0,000
LF928	CP149	Wind	Y	0,046	0.000	Rela	From start	0,000
	Wy - Rüzgar	GCS	Uniform	0,047	1.000	Length		0,000
LF929	CP150	Wind	Y	0,048	0.000	Rela	From start	0,000
	Wy - Rüzgar	GCS	Uniform	0,049	1.000	Length		0,000
LF930	CP151	Wind	Y	0,054	0.000	Rela	From start	0,000
	Wy - Rüzgar	GCS	Uniform	0,054	1.000	Length		0,000
LF931	CP152	Wind	Y	0,054	0.000	Rela	From start	0,000
	Wy - Rüzgar	GCS	Uniform	0,054	1.000	Length		0,000
LF932	CP153	Wind	Y	0,042	0.000	Rela	From start	0,000
	Wy - Rüzgar	GCS	Uniform	0,043	1.000	Length		0,000

Name	Member Load case	Type System	Dir Distribution	Value - P_1 [kN/m] Value - P_2 [kN/m]	Pos x_1 Pos x_2	Coor Loc	Orig	Ecc ey Ecc ez
LF933	CP154	Wind	Y	0,045	0.000	Rela	From start	0,000
	Wy - Rüzgar	GCS	Uniform	0,046	1.000	Length		0,000
LF934	CP155	Wind	Y	0,047	0.000	Rela	From start	0,000
	Wy - Rüzgar	GCS	Uniform	0,048	1.000	Length		0,000
LF935	CP156	Wind	Y	0,050	0.000	Rela	From start	0,000
	Wy - Rüzgar	GCS	Uniform	0,050	1.000	Length		0,000
LF936	CP157	Wind	Y	0,054	0.000	Rela	From start	0,000
	Wy - Rüzgar	GCS	Uniform	0,054	1.000	Length		0,000
LF937	B1110	Wind	Y	0,064	0.000	Rela	From start	0,000
	Wy - Rüzgar	GCS	Uniform	0,066	1.000	Length		0,000
LF938	B1110	Wind	X	0,064	0.000	Rela	From start	0,000
	Wx - Rüzgar	GCS	Uniform	0,066	1.000	Length		0,000
LF939	B1111	Wind	X	0,064	0.000	Rela	From start	0,000
	Wx - Rüzgar	GCS	Uniform	0,066	1.000	Length		0,000
LF940	B1112	Wind	Y	0,064	0.000	Rela	From start	0,000
	Wy - Rüzgar	GCS	Uniform	0,066	1.000	Length		0,000
LF941	B1114	Wind	Y	0,064	0.000	Rela	From start	0,000
	Wy - Rüzgar	GCS	Uniform	0,066	1.000	Length		0,000
LF942	B1116	Wind	Y	0,064	0.000	Rela	From start	0,000
	Wy - Rüzgar	GCS	Uniform	0,066	1.000	Length		0,000
LF943	B1118	Wind	Y	0,064	0.000	Rela	From start	0,000
	Wy - Rüzgar	GCS	Uniform	0,066	1.000	Length		0,000
LF944	B1120	Wind	Y	0,064	0.000	Rela	From start	0,000
	Wy - Rüzgar	GCS	Uniform	0,066	1.000	Length		0,000
LF945	B1122	Wind	Y	0,064	0.000	Rela	From start	0,000
	Wy - Rüzgar	GCS	Uniform	0,066	1.000	Length		0,000
LF946	B1124	Wind	Y	0,064	0.000	Rela	From start	0,000
	Wy - Rüzgar	GCS	Uniform	0,066	1.000	Length		0,000
LF947	B1126	Wind	X	0,055	0.000	Rela	From start	0,000
	Wx - Rüzgar	GCS	Uniform	0,055	1.000	Length		0,000
LF948	B1134	Wind	Y	0,064	0.000	Rela	From start	0,000
	Wy - Rüzgar	GCS	Uniform	0,066	1.000	Length		0,000
LF949	B1137	Wind	Y	0,064	0.000	Rela	From start	0,000
	Wy - Rüzgar	GCS	Uniform	0,066	1.000	Length		0,000
LF950	B1140	Wind	Y	0,064	0.000	Rela	From start	0,000
	Wy - Rüzgar	GCS	Uniform	0,066	1.000	Length		0,000
LF951	B1143	Wind	X	0,064	0.000	Rela	From start	0,000
	Wx - Rüzgar	GCS	Uniform	0,064	1.000	Length		0,000
LF952	B1154	Wind	Y	0,045	0.000	Rela	From start	0,000
	Wy - Rüzgar	GCS	Uniform	0,045	1.000	Length		0,000
LF953	B1155	Wind	Y	0,045	0.000	Rela	From start	0,000
	Wy - Rüzgar	GCS	Uniform	0,045	1.000	Length		0,000
LF954	B1156	Wind	Y	0,045	0.000	Rela	From start	0,000
	Wy - Rüzgar	GCS	Uniform	0,045	1.000	Length		0,000
LF955	B1157	Wind	Y	0,045	0.000	Rela	From start	0,000
	Wy - Rüzgar	GCS	Uniform	0,045	1.000	Length		0,000
LF956	B1158	Wind	Y	0,045	0.000	Rela	From start	0,000
	Wy - Rüzgar	GCS	Uniform	0,045	1.000	Length		0,000
LF957	B1159	Wind	Y	0,045	0.000	Rela	From start	0,000
	Wy - Rüzgar	GCS	Uniform	0,045	1.000	Length		0,000
LF958	B1160	Wind	Y	0,045	0.000	Rela	From start	0,000
	Wy - Rüzgar	GCS	Uniform	0,045	1.000	Length		0,000
LF959	B1161	Wind	Y	0,045	0.000	Rela	From start	0,000
	Wy - Rüzgar	GCS	Uniform	0,045	1.000	Length		0,000
LF960	B1162	Wind	Y	0,045	0.000	Rela	From start	0,000
	Wy - Rüzgar	GCS	Uniform	0,045	1.000	Length		0,000
LF961	B1163	Wind	Y	0,045	0.000	Rela	From start	0,000
	Wy - Rüzgar	GCS	Uniform	0,045	1.000	Length		0,000
LF962	B1164	Wind	Y	0,045	0.000	Rela	From start	0,000
	Wy - Rüzgar	GCS	Uniform	0,045	1.000	Length		0,000
LF963	B1165	Wind	Y	0,045	0.000	Rela	From start	0,000
	Wy - Rüzgar	GCS	Uniform	0,045	1.000	Length		0,000
LF964	B1166	Wind	Y	0,045	0.000	Rela	From start	0,000
	Wy - Rüzgar	GCS	Uniform	0,045	1.000	Length		0,000
LF965	B1167	Wind	Y	0,045	0.000	Rela	From start	0,000
	Wy - Rüzgar	GCS	Uniform	0,045	1.000	Length		0,000
LF966	B1168	Wind	Y	0,045	0.000	Rela	From start	0,000
	Wy - Rüzgar	GCS	Uniform	0,045	1.000	Length		0,000
LF967	B1169	Wind	Y	0,045	0.000	Rela	From start	0,000
	Wy - Rüzgar	GCS	Uniform	0,045	1.000	Length		0,000
LF968	B1170	Wind	Y	0,045	0.000	Rela	From start	0,000
	Wy - Rüzgar	GCS	Uniform	0,045	1.000	Length		0,000
LF969	B1171	Wind	Y	0,045	0.000	Rela	From start	0,000
	Wy - Rüzgar	GCS	Uniform	0,045	1.000	Length		0,000

Name	Member Load case	Type System	Dir Distribution	Value - P_1 [kN/m] Value - P_2 [kN/m]	Pos x_1 Pos x_2	Coor Loc	Orig	Ecc ey Ecc ez
LF970	B1172	Wind	Y	0,045	0.000	Rela	From start	0,000
	Wy - Rüzgar	GCS	Uniform	0,045	1.000	Length		0,000
LF971	B1173	Wind	Y	0,045	0.000	Rela	From start	0,000
	Wy - Rüzgar	GCS	Uniform	0,045	1.000	Length		0,000
LF972	PL262	Wind	Y	0,410	0.000	Rela	From start	0,000
	Wy - Rüzgar	GCS	Uniform	0,410	1.000	Length		0,000
LF973	PL264	Wind	Y	0,410	0.000	Rela	From start	0,000
	Wy - Rüzgar	GCS	Uniform	0,410	1.000	Length		0,000
LF974	PL266	Wind	Y	0,410	0.000	Rela	From start	0,000
	Wy - Rüzgar	GCS	Uniform	0,410	1.000	Length		0,000
LF975	PL268	Wind	Y	0,410	0.000	Rela	From start	0,000
	Wy - Rüzgar	GCS	Uniform	0,410	1.000	Length		0,000
LF976	PL270	Wind	Y	0,410	0.000	Rela	From start	0,000
	Wy - Rüzgar	GCS	Uniform	0,410	1.000	Length		0,000
LF977	PL272	Wind	Y	0,410	0.000	Rela	From start	0,000
	Wy - Rüzgar	GCS	Uniform	0,410	1.000	Length		0,000
LF978	PL274	Wind	Y	0,410	0.000	Rela	From start	0,000
	Wy - Rüzgar	GCS	Uniform	0,410	1.000	Length		0,000
LF979	PL276	Wind	Y	0,410	0.000	Rela	From start	0,000
	Wy - Rüzgar	GCS	Uniform	0,410	1.000	Length		0,000
LF980	PL278	Wind	Y	0,410	0.000	Rela	From start	0,000
	Wy - Rüzgar	GCS	Uniform	0,410	1.000	Length		0,000
LF981	PL280	Wind	Y	0,410	0.000	Rela	From start	0,000
	Wy - Rüzgar	GCS	Uniform	0,410	1.000	Length		0,000
LF982	CP158	Wind	Y	0,051	0.000	Rela	From start	0,000
	Wy - Rüzgar	GCS	Uniform	0,052	1.000	Length		0,000
LF983	CP159	Wind	Y	0,051	0.000	Rela	From start	0,000
	Wy - Rüzgar	GCS	Uniform	0,052	1.000	Length		0,000
LF984	CP160	Wind	Y	0,051	0.000	Rela	From start	0,000
	Wy - Rüzgar	GCS	Uniform	0,052	1.000	Length		0,000
LF985	CP161	Wind	Y	0,051	0.000	Rela	From start	0,000
	Wy - Rüzgar	GCS	Uniform	0,052	1.000	Length		0,000
LF986	CP162	Wind	Y	0,051	0.000	Rela	From start	0,000
	Wy - Rüzgar	GCS	Uniform	0,052	1.000	Length		0,000
LF987	CP163	Wind	Y	0,051	0.000	Rela	From start	0,000
	Wy - Rüzgar	GCS	Uniform	0,052	1.000	Length		0,000
LF988	B1174	Wind	Y	0,066	0.000	Rela	From start	0,000
	Wy - Rüzgar	GCS	Uniform	0,067	1.000	Length		0,000
LF989	B1174	Wind	X	0,066	0.000	Rela	From start	0,000
	Wx - Rüzgar	GCS	Uniform	0,067	1.000	Length		0,000
LF990	B1175	Wind	X	0,066	0.000	Rela	From start	0,000
	Wx - Rüzgar	GCS	Uniform	0,067	1.000	Length		0,000
LF991	B1176	Wind	Y	0,066	0.000	Rela	From start	0,000
	Wy - Rüzgar	GCS	Uniform	0,067	1.000	Length		0,000
LF992	B1178	Wind	Y	0,066	0.000	Rela	From start	0,000
	Wy - Rüzgar	GCS	Uniform	0,067	1.000	Length		0,000
LF993	B1180	Wind	Y	0,066	0.000	Rela	From start	0,000
	Wy - Rüzgar	GCS	Uniform	0,067	1.000	Length		0,000
LF994	B1182	Wind	Y	0,066	0.000	Rela	From start	0,000
	Wy - Rüzgar	GCS	Uniform	0,067	1.000	Length		0,000
LF995	B1184	Wind	Y	0,066	0.000	Rela	From start	0,000
	Wy - Rüzgar	GCS	Uniform	0,067	1.000	Length		0,000
LF996	B1186	Wind	Y	0,066	0.000	Rela	From start	0,000
	Wy - Rüzgar	GCS	Uniform	0,067	1.000	Length		0,000
LF997	B1188	Wind	Y	0,066	0.000	Rela	From start	0,000
	Wy - Rüzgar	GCS	Uniform	0,067	1.000	Length		0,000
LF998	B1190	Wind	X	0,056	0.000	Rela	From start	0,000
	Wx - Rüzgar	GCS	Uniform	0,056	1.000	Length		0,000
LF999	B1198	Wind	Y	0,066	0.000	Rela	From start	0,000
	Wy - Rüzgar	GCS	Uniform	0,067	1.000	Length		0,000
LF1000	B1201	Wind	Y	0,066	0.000	Rela	From start	0,000
	Wy - Rüzgar	GCS	Uniform	0,067	1.000	Length		0,000
LF1001	B1204	Wind	Y	0,066	0.000	Rela	From start	0,000
	Wy - Rüzgar	GCS	Uniform	0,067	1.000	Length		0,000
LF1002	B1207	Wind	X	0,066	0.000	Rela	From start	0,000
	Wx - Rüzgar	GCS	Uniform	0,066	1.000	Length		0,000
LF1003	B1218	Wind	Y	0,047	0.000	Rela	From start	0,000
	Wy - Rüzgar	GCS	Uniform	0,047	1.000	Length		0,000
LF1004	B1219	Wind	Y	0,046	0.000	Rela	From start	0,000
	Wy - Rüzgar	GCS	Uniform	0,046	1.000	Length		0,000
LF1005	B1220	Wind	Y	0,047	0.000	Rela	From start	0,000
	Wy - Rüzgar	GCS	Uniform	0,047	1.000	Length		0,000
LF1006	B1221	Wind	Y	0,046	0.000	Rela	From start	0,000
	Wy - Rüzgar	GCS	Uniform	0,046	1.000	Length		0,000

Name	Member Load case	Type System	Dir Distribution	Value - P_1 [kN/m] Value - P_2 [kN/m]	Pos x_1 Pos x_2	Coor Loc	Orig	Ecc ey Ecc ez
LF1007	B1222	Wind	Y	0,047	0.000	Rela	From start	0,000
	Wy - Rüzgar	GCS	Uniform	0,047	1.000	Length		0,000
LF1008	B1223	Wind	Y	0,046	0.000	Rela	From start	0,000
	Wy - Rüzgar	GCS	Uniform	0,046	1.000	Length		0,000
LF1009	B1224	Wind	Y	0,047	0.000	Rela	From start	0,000
	Wy - Rüzgar	GCS	Uniform	0,047	1.000	Length		0,000
LF1010	B1225	Wind	Y	0,046	0.000	Rela	From start	0,000
	Wy - Rüzgar	GCS	Uniform	0,046	1.000	Length		0,000
LF1011	B1226	Wind	Y	0,047	0.000	Rela	From start	0,000
	Wy - Rüzgar	GCS	Uniform	0,047	1.000	Length		0,000
LF1012	B1227	Wind	Y	0,046	0.000	Rela	From start	0,000
	Wy - Rüzgar	GCS	Uniform	0,046	1.000	Length		0,000
LF1013	B1228	Wind	Y	0,047	0.000	Rela	From start	0,000
	Wy - Rüzgar	GCS	Uniform	0,047	1.000	Length		0,000
LF1014	B1229	Wind	Y	0,046	0.000	Rela	From start	0,000
	Wy - Rüzgar	GCS	Uniform	0,046	1.000	Length		0,000
LF1015	B1230	Wind	Y	0,047	0.000	Rela	From start	0,000
	Wy - Rüzgar	GCS	Uniform	0,047	1.000	Length		0,000
LF1016	B1231	Wind	Y	0,046	0.000	Rela	From start	0,000
	Wy - Rüzgar	GCS	Uniform	0,046	1.000	Length		0,000
LF1017	B1232	Wind	Y	0,047	0.000	Rela	From start	0,000
	Wy - Rüzgar	GCS	Uniform	0,047	1.000	Length		0,000
LF1018	B1233	Wind	Y	0,046	0.000	Rela	From start	0,000
	Wy - Rüzgar	GCS	Uniform	0,046	1.000	Length		0,000
LF1019	B1234	Wind	Y	0,047	0.000	Rela	From start	0,000
	Wy - Rüzgar	GCS	Uniform	0,047	1.000	Length		0,000
LF1020	B1235	Wind	Y	0,046	0.000	Rela	From start	0,000
	Wy - Rüzgar	GCS	Uniform	0,046	1.000	Length		0,000
LF1021	B1236	Wind	Y	0,047	0.000	Rela	From start	0,000
	Wy - Rüzgar	GCS	Uniform	0,047	1.000	Length		0,000
LF1022	B1237	Wind	Y	0,046	0.000	Rela	From start	0,000
	Wy - Rüzgar	GCS	Uniform	0,046	1.000	Length		0,000
LF1023	PL282	Wind	Y	0,419	0.000	Rela	From start	0,000
	Wy - Rüzgar	GCS	Uniform	0,419	1.000	Length		0,000
LF1024	PL284	Wind	Y	0,419	0.000	Rela	From start	0,000
	Wy - Rüzgar	GCS	Uniform	0,419	1.000	Length		0,000
LF1025	PL286	Wind	Y	0,419	0.000	Rela	From start	0,000
	Wy - Rüzgar	GCS	Uniform	0,419	1.000	Length		0,000
LF1026	PL288	Wind	Y	0,419	0.000	Rela	From start	0,000
	Wy - Rüzgar	GCS	Uniform	0,419	1.000	Length		0,000
LF1027	PL290	Wind	Y	0,419	0.000	Rela	From start	0,000
	Wy - Rüzgar	GCS	Uniform	0,419	1.000	Length		0,000
LF1028	PL292	Wind	Y	0,419	0.000	Rela	From start	0,000
	Wy - Rüzgar	GCS	Uniform	0,419	1.000	Length		0,000
LF1029	PL294	Wind	Y	0,419	0.000	Rela	From start	0,000
	Wy - Rüzgar	GCS	Uniform	0,419	1.000	Length		0,000
LF1030	PL296	Wind	Y	0,419	0.000	Rela	From start	0,000
	Wy - Rüzgar	GCS	Uniform	0,419	1.000	Length		0,000
LF1031	PL298	Wind	Y	0,419	0.000	Rela	From start	0,000
	Wy - Rüzgar	GCS	Uniform	0,419	1.000	Length		0,000
LF1032	PL300	Wind	Y	0,419	0.000	Rela	From start	0,000
	Wy - Rüzgar	GCS	Uniform	0,419	1.000	Length		0,000
LF1033	CP164	Wind	Y	0,052	0.000	Rela	From start	0,000
	Wy - Rüzgar	GCS	Uniform	0,053	1.000	Length		0,000
LF1034	CP165	Wind	Y	0,052	0.000	Rela	From start	0,000
	Wy - Rüzgar	GCS	Uniform	0,053	1.000	Length		0,000
LF1035	CP166	Wind	Y	0,052	0.000	Rela	From start	0,000
	Wy - Rüzgar	GCS	Uniform	0,053	1.000	Length		0,000
LF1036	CP167	Wind	Y	0,052	0.000	Rela	From start	0,000
	Wy - Rüzgar	GCS	Uniform	0,053	1.000	Length		0,000
LF1037	CP168	Wind	Y	0,052	0.000	Rela	From start	0,000
	Wy - Rüzgar	GCS	Uniform	0,053	1.000	Length		0,000
LF1038	CP169	Wind	Y	0,052	0.000	Rela	From start	0,000
	Wy - Rüzgar	GCS	Uniform	0,053	1.000	Length		0,000
LF1039	B1238	Wind	Y	0,067	0.000	Rela	From start	0,000
	Wy - Rüzgar	GCS	Uniform	0,069	1.000	Length		0,000
LF1040	B1238	Wind	X	0,067	0.000	Rela	From start	0,000
	Wx - Rüzgar	GCS	Uniform	0,069	1.000	Length		0,000
LF1041	B1239	Wind	X	0,067	0.000	Rela	From start	0,000
	Wx - Rüzgar	GCS	Uniform	0,069	1.000	Length		0,000
LF1042	B1240	Wind	Y	0,067	0.000	Rela	From start	0,000
	Wy - Rüzgar	GCS	Uniform	0,069	1.000	Length		0,000
LF1043	B1242	Wind	Y	0,067	0.000	Rela	From start	0,000
	Wy - Rüzgar	GCS	Uniform	0,069	1.000	Length		0,000

Name	Member Load case	Type System	Dir Distribution	Value - P_1 [kN/m] Value - P_2 [kN/m]	Pos x_1 Pos x_2	Coor Loc	Orig	Ecc ey Ecc ez
LF1044	B1244	Wind	Y	0,067	0.000	Rela	From start	0,000
	Wy - Rüzgar	GCS	Uniform	0,069	1.000	Length		0,000
LF1045	B1246	Wind	Y	0,067	0.000	Rela	From start	0,000
	Wy - Rüzgar	GCS	Uniform	0,069	1.000	Length		0,000
LF1046	B1248	Wind	Y	0,067	0.000	Rela	From start	0,000
	Wy - Rüzgar	GCS	Uniform	0,069	1.000	Length		0,000
LF1047	B1250	Wind	Y	0,067	0.000	Rela	From start	0,000
	Wy - Rüzgar	GCS	Uniform	0,069	1.000	Length		0,000
LF1048	B1252	Wind	Y	0,067	0.000	Rela	From start	0,000
	Wy - Rüzgar	GCS	Uniform	0,069	1.000	Length		0,000
LF1049	B1254	Wind	X	0,057	0.000	Rela	From start	0,000
	Wx - Rüzgar	GCS	Uniform	0,057	1.000	Length		0,000
LF1050	B1262	Wind	Y	0,067	0.000	Rela	From start	0,000
	Wy - Rüzgar	GCS	Uniform	0,069	1.000	Length		0,000
LF1051	B1265	Wind	Y	0,067	0.000	Rela	From start	0,000
	Wy - Rüzgar	GCS	Uniform	0,069	1.000	Length		0,000
LF1052	B1268	Wind	Y	0,067	0.000	Rela	From start	0,000
	Wy - Rüzgar	GCS	Uniform	0,069	1.000	Length		0,000
LF1053	B1271	Wind	X	0,067	0.000	Rela	From start	0,000
	Wx - Rüzgar	GCS	Uniform	0,067	1.000	Length		0,000
LF1054	B1282	Wind	Y	0,048	0.000	Rela	From start	0,000
	Wy - Rüzgar	GCS	Uniform	0,048	1.000	Length		0,000
LF1055	B1283	Wind	Y	0,047	0.000	Rela	From start	0,000
	Wy - Rüzgar	GCS	Uniform	0,047	1.000	Length		0,000
LF1056	B1284	Wind	Y	0,048	0.000	Rela	From start	0,000
	Wy - Rüzgar	GCS	Uniform	0,048	1.000	Length		0,000
LF1057	B1285	Wind	Y	0,047	0.000	Rela	From start	0,000
	Wy - Rüzgar	GCS	Uniform	0,047	1.000	Length		0,000
LF1058	B1286	Wind	Y	0,048	0.000	Rela	From start	0,000
	Wy - Rüzgar	GCS	Uniform	0,048	1.000	Length		0,000
LF1059	B1287	Wind	Y	0,047	0.000	Rela	From start	0,000
	Wy - Rüzgar	GCS	Uniform	0,047	1.000	Length		0,000
LF1060	B1288	Wind	Y	0,048	0.000	Rela	From start	0,000
	Wy - Rüzgar	GCS	Uniform	0,048	1.000	Length		0,000
LF1061	B1289	Wind	Y	0,047	0.000	Rela	From start	0,000
	Wy - Rüzgar	GCS	Uniform	0,047	1.000	Length		0,000
LF1062	B1290	Wind	Y	0,048	0.000	Rela	From start	0,000
	Wy - Rüzgar	GCS	Uniform	0,048	1.000	Length		0,000
LF1063	B1291	Wind	Y	0,047	0.000	Rela	From start	0,000
	Wy - Rüzgar	GCS	Uniform	0,047	1.000	Length		0,000
LF1064	B1292	Wind	Y	0,048	0.000	Rela	From start	0,000
	Wy - Rüzgar	GCS	Uniform	0,048	1.000	Length		0,000
LF1065	B1293	Wind	Y	0,047	0.000	Rela	From start	0,000
	Wy - Rüzgar	GCS	Uniform	0,047	1.000	Length		0,000
LF1066	B1294	Wind	Y	0,048	0.000	Rela	From start	0,000
	Wy - Rüzgar	GCS	Uniform	0,048	1.000	Length		0,000
LF1067	B1295	Wind	Y	0,047	0.000	Rela	From start	0,000
	Wy - Rüzgar	GCS	Uniform	0,047	1.000	Length		0,000
LF1068	B1296	Wind	Y	0,048	0.000	Rela	From start	0,000
	Wy - Rüzgar	GCS	Uniform	0,048	1.000	Length		0,000
LF1069	B1297	Wind	Y	0,047	0.000	Rela	From start	0,000
	Wy - Rüzgar	GCS	Uniform	0,047	1.000	Length		0,000
LF1070	B1298	Wind	Y	0,048	0.000	Rela	From start	0,000
	Wy - Rüzgar	GCS	Uniform	0,048	1.000	Length		0,000
LF1071	B1299	Wind	Y	0,047	0.000	Rela	From start	0,000
	Wy - Rüzgar	GCS	Uniform	0,047	1.000	Length		0,000
LF1072	B1300	Wind	Y	0,048	0.000	Rela	From start	0,000
	Wy - Rüzgar	GCS	Uniform	0,048	1.000	Length		0,000
LF1073	B1301	Wind	Y	0,047	0.000	Rela	From start	0,000
	Wy - Rüzgar	GCS	Uniform	0,047	1.000	Length		0,000
LF1074	PL302	Wind	Y	0,429	0.000	Rela	From start	0,000
	Wy - Rüzgar	GCS	Uniform	0,429	1.000	Length		0,000
LF1075	PL304	Wind	Y	0,429	0.000	Rela	From start	0,000
	Wy - Rüzgar	GCS	Uniform	0,429	1.000	Length		0,000
LF1076	PL306	Wind	Y	0,429	0.000	Rela	From start	0,000
	Wy - Rüzgar	GCS	Uniform	0,429	1.000	Length		0,000
LF1077	PL308	Wind	Y	0,429	0.000	Rela	From start	0,000
	Wy - Rüzgar	GCS	Uniform	0,429	1.000	Length		0,000
LF1078	PL310	Wind	Y	0,429	0.000	Rela	From start	0,000
	Wy - Rüzgar	GCS	Uniform	0,429	1.000	Length		0,000
LF1079	PL312	Wind	Y	0,429	0.000	Rela	From start	0,000
	Wy - Rüzgar	GCS	Uniform	0,429	1.000	Length		0,000
LF1080	PL314	Wind	Y	0,429	0.000	Rela	From start	0,000
	Wy - Rüzgar	GCS	Uniform	0,429	1.000	Length		0,000

Name	Member Load case	Type System	Dir Distribution	Value - P_1 [kN/m] Value - P_2 [kN/m]	Pos x_1 Pos x_2	Coor Loc	Orig	Ecc ey Ecc ez
LF1081	PL316	Wind	Y	0,429	0.000	Rela	From start	0,000
	Wy - Rüzgar	GCS	Uniform	0,429	1.000	Length		0,000
LF1082	PL318	Wind	Y	0,429	0.000	Rela	From start	0,000
	Wy - Rüzgar	GCS	Uniform	0,429	1.000	Length		0,000
LF1083	PL320	Wind	Y	0,429	0.000	Rela	From start	0,000
	Wy - Rüzgar	GCS	Uniform	0,429	1.000	Length		0,000
LF1084	CP170	Wind	Y	0,053	0.000	Rela	From start	0,000
	Wy - Rüzgar	GCS	Uniform	0,054	1.000	Length		0,000
LF1085	CP171	Wind	Y	0,053	0.000	Rela	From start	0,000
	Wy - Rüzgar	GCS	Uniform	0,054	1.000	Length		0,000
LF1086	CP172	Wind	Y	0,053	0.000	Rela	From start	0,000
	Wy - Rüzgar	GCS	Uniform	0,054	1.000	Length		0,000
LF1087	CP173	Wind	Y	0,053	0.000	Rela	From start	0,000
	Wy - Rüzgar	GCS	Uniform	0,054	1.000	Length		0,000
LF1088	CP174	Wind	Y	0,053	0.000	Rela	From start	0,000
	Wy - Rüzgar	GCS	Uniform	0,054	1.000	Length		0,000
LF1089	CP175	Wind	Y	0,053	0.000	Rela	From start	0,000
	Wy - Rüzgar	GCS	Uniform	0,054	1.000	Length		0,000
LF1090	B1302	Wind	Y	0,069	0.000	Rela	From start	0,000
	Wy - Rüzgar	GCS	Uniform	0,069	1.000	Length		0,000
LF1091	B1302	Wind	X	0,069	0.000	Rela	From start	0,000
	Wx - Rüzgar	GCS	Uniform	0,069	1.000	Length		0,000
LF1092	B1303	Wind	X	0,069	0.000	Rela	From start	0,000
	Wx - Rüzgar	GCS	Uniform	0,069	1.000	Length		0,000
LF1093	B1304	Wind	Y	0,069	0.000	Rela	From start	0,000
	Wy - Rüzgar	GCS	Uniform	0,069	1.000	Length		0,000
LF1094	B1306	Wind	Y	0,069	0.000	Rela	From start	0,000
	Wy - Rüzgar	GCS	Uniform	0,069	1.000	Length		0,000
LF1095	B1308	Wind	Y	0,069	0.000	Rela	From start	0,000
	Wy - Rüzgar	GCS	Uniform	0,069	1.000	Length		0,000
LF1096	B1310	Wind	Y	0,069	0.000	Rela	From start	0,000
	Wy - Rüzgar	GCS	Uniform	0,069	1.000	Length		0,000
LF1097	B1312	Wind	Y	0,069	0.000	Rela	From start	0,000
	Wy - Rüzgar	GCS	Uniform	0,069	1.000	Length		0,000
LF1098	B1314	Wind	Y	0,069	0.000	Rela	From start	0,000
	Wy - Rüzgar	GCS	Uniform	0,069	1.000	Length		0,000
LF1099	B1316	Wind	Y	0,069	0.000	Rela	From start	0,000
	Wy - Rüzgar	GCS	Uniform	0,069	1.000	Length		0,000
LF1100	B1318	Wind	X	0,057	0.000	Rela	From start	0,000
	Wx - Rüzgar	GCS	Uniform	0,057	1.000	Length		0,000
LF1101	B1326	Wind	Y	0,069	0.000	Rela	From start	0,000
	Wy - Rüzgar	GCS	Uniform	0,069	1.000	Length		0,000
LF1102	B1329	Wind	Y	0,069	0.000	Rela	From start	0,000
	Wy - Rüzgar	GCS	Uniform	0,069	1.000	Length		0,000
LF1103	B1332	Wind	Y	0,069	0.000	Rela	From start	0,000
	Wy - Rüzgar	GCS	Uniform	0,069	1.000	Length		0,000
LF1104	B1335	Wind	X	0,069	0.000	Rela	From start	0,000
	Wx - Rüzgar	GCS	Uniform	0,069	1.000	Length		0,000
LF1105	B1346	Wind	Y	0,048	0.000	Rela	From start	0,000
	Wy - Rüzgar	GCS	Uniform	0,048	1.000	Length		0,000
LF1106	B1347	Wind	Y	0,048	0.000	Rela	From start	0,000
	Wy - Rüzgar	GCS	Uniform	0,048	1.000	Length		0,000
LF1107	B1348	Wind	Y	0,048	0.000	Rela	From start	0,000
	Wy - Rüzgar	GCS	Uniform	0,048	1.000	Length		0,000
LF1108	B1349	Wind	Y	0,048	0.000	Rela	From start	0,000
	Wy - Rüzgar	GCS	Uniform	0,048	1.000	Length		0,000
LF1109	B1350	Wind	Y	0,048	0.000	Rela	From start	0,000
	Wy - Rüzgar	GCS	Uniform	0,048	1.000	Length		0,000
LF1110	B1351	Wind	Y	0,048	0.000	Rela	From start	0,000
	Wy - Rüzgar	GCS	Uniform	0,048	1.000	Length		0,000
LF1111	B1352	Wind	Y	0,048	0.000	Rela	From start	0,000
	Wy - Rüzgar	GCS	Uniform	0,048	1.000	Length		0,000
LF1112	B1353	Wind	Y	0,048	0.000	Rela	From start	0,000
	Wy - Rüzgar	GCS	Uniform	0,048	1.000	Length		0,000
LF1113	B1354	Wind	Y	0,048	0.000	Rela	From start	0,000
	Wy - Rüzgar	GCS	Uniform	0,048	1.000	Length		0,000
LF1114	B1355	Wind	Y	0,048	0.000	Rela	From start	0,000
	Wy - Rüzgar	GCS	Uniform	0,048	1.000	Length		0,000
LF1115	B1356	Wind	Y	0,048	0.000	Rela	From start	0,000
	Wy - Rüzgar	GCS	Uniform	0,048	1.000	Length		0,000
LF1116	B1357	Wind	Y	0,048	0.000	Rela	From start	0,000
	Wy - Rüzgar	GCS	Uniform	0,048	1.000	Length		0,000
LF1117	B1358	Wind	Y	0,048	0.000	Rela	From start	0,000
	Wy - Rüzgar	GCS	Uniform	0,048	1.000	Length		0,000

Name	Member Load case	Type System	Dir Distribution	Value - P_1 [kN/m] Value - P_2 [kN/m]	Pos x_1 Pos x_2	Coor Loc	Orig	Ecc ey Ecc ez
LF1118	B1359	Wind	Y	0,048	0.000	Rela	From start	0,000
	Wy - Rüzgar	GCS	Uniform	0,048	1.000	Length		0,000
LF1119	B1360	Wind	Y	0,048	0.000	Rela	From start	0,000
	Wy - Rüzgar	GCS	Uniform	0,048	1.000	Length		0,000
LF1120	B1361	Wind	Y	0,048	0.000	Rela	From start	0,000
	Wy - Rüzgar	GCS	Uniform	0,048	1.000	Length		0,000
LF1121	B1362	Wind	Y	0,048	0.000	Rela	From start	0,000
	Wy - Rüzgar	GCS	Uniform	0,048	1.000	Length		0,000
LF1122	B1363	Wind	Y	0,048	0.000	Rela	From start	0,000
	Wy - Rüzgar	GCS	Uniform	0,048	1.000	Length		0,000
LF1123	B1364	Wind	Y	0,048	0.000	Rela	From start	0,000
	Wy - Rüzgar	GCS	Uniform	0,048	1.000	Length		0,000
LF1124	B1365	Wind	Y	0,048	0.000	Rela	From start	0,000
	Wy - Rüzgar	GCS	Uniform	0,048	1.000	Length		0,000
LF1125	PL322	Wind	Y	0,429	0.000	Rela	From start	0,000
	Wy - Rüzgar	GCS	Uniform	0,429	1.000	Length		0,000
LF1126	PL324	Wind	Y	0,429	0.000	Rela	From start	0,000
	Wy - Rüzgar	GCS	Uniform	0,429	1.000	Length		0,000
LF1127	PL326	Wind	Y	0,429	0.000	Rela	From start	0,000
	Wy - Rüzgar	GCS	Uniform	0,429	1.000	Length		0,000
LF1128	PL328	Wind	Y	0,429	0.000	Rela	From start	0,000
	Wy - Rüzgar	GCS	Uniform	0,429	1.000	Length		0,000
LF1129	PL330	Wind	Y	0,429	0.000	Rela	From start	0,000
	Wy - Rüzgar	GCS	Uniform	0,429	1.000	Length		0,000
LF1130	PL332	Wind	Y	0,429	0.000	Rela	From start	0,000
	Wy - Rüzgar	GCS	Uniform	0,429	1.000	Length		0,000
LF1131	PL334	Wind	Y	0,429	0.000	Rela	From start	0,000
	Wy - Rüzgar	GCS	Uniform	0,429	1.000	Length		0,000
LF1132	PL336	Wind	Y	0,429	0.000	Rela	From start	0,000
	Wy - Rüzgar	GCS	Uniform	0,429	1.000	Length		0,000
LF1133	PL338	Wind	Y	0,429	0.000	Rela	From start	0,000
	Wy - Rüzgar	GCS	Uniform	0,429	1.000	Length		0,000
LF1134	PL340	Wind	Y	0,429	0.000	Rela	From start	0,000
	Wy - Rüzgar	GCS	Uniform	0,429	1.000	Length		0,000
LF1135	CP176	Wind	Y	0,054	0.000	Rela	From start	0,000
	Wy - Rüzgar	GCS	Uniform	0,054	1.000	Length		0,000
LF1136	CP177	Wind	Y	0,054	0.000	Rela	From start	0,000
	Wy - Rüzgar	GCS	Uniform	0,054	1.000	Length		0,000
LF1137	CP178	Wind	Y	0,054	0.000	Rela	From start	0,000
	Wy - Rüzgar	GCS	Uniform	0,054	1.000	Length		0,000
LF1138	CP179	Wind	Y	0,054	0.000	Rela	From start	0,000
	Wy - Rüzgar	GCS	Uniform	0,054	1.000	Length		0,000
LF1139	CP180	Wind	Y	0,054	0.000	Rela	From start	0,000
	Wy - Rüzgar	GCS	Uniform	0,054	1.000	Length		0,000
LF1140	CP181	Wind	Y	0,054	0.000	Rela	From start	0,000
	Wy - Rüzgar	GCS	Uniform	0,054	1.000	Length		0,000
LF1141	B1366	Wind	Y	0,069	0.000	Rela	From start	0,000
	Wy - Rüzgar	GCS	Uniform	0,069	1.000	Length		0,000
LF1142	B1366	Wind	X	0,069	0.000	Rela	From start	0,000
	Wx - Rüzgar	GCS	Uniform	0,069	1.000	Length		0,000
LF1143	B1367	Wind	X	0,069	0.000	Rela	From start	0,000
	Wx - Rüzgar	GCS	Uniform	0,069	1.000	Length		0,000
LF1144	B1368	Wind	Y	0,069	0.000	Rela	From start	0,000
	Wy - Rüzgar	GCS	Uniform	0,069	1.000	Length		0,000
LF1145	B1370	Wind	Y	0,069	0.000	Rela	From start	0,000
	Wy - Rüzgar	GCS	Uniform	0,069	1.000	Length		0,000
LF1146	B1372	Wind	Y	0,069	0.000	Rela	From start	0,000
	Wy - Rüzgar	GCS	Uniform	0,069	1.000	Length		0,000
LF1147	B1374	Wind	Y	0,069	0.000	Rela	From start	0,000
	Wy - Rüzgar	GCS	Uniform	0,069	1.000	Length		0,000
LF1148	B1376	Wind	Y	0,069	0.000	Rela	From start	0,000
	Wy - Rüzgar	GCS	Uniform	0,069	1.000	Length		0,000
LF1149	B1378	Wind	Y	0,069	0.000	Rela	From start	0,000
	Wy - Rüzgar	GCS	Uniform	0,069	1.000	Length		0,000
LF1150	B1380	Wind	Y	0,069	0.000	Rela	From start	0,000
	Wy - Rüzgar	GCS	Uniform	0,069	1.000	Length		0,000
LF1151	B1382	Wind	X	0,057	0.000	Rela	From start	0,000
	Wx - Rüzgar	GCS	Uniform	0,057	1.000	Length		0,000
LF1152	B1390	Wind	Y	0,069	0.000	Rela	From start	0,000
	Wy - Rüzgar	GCS	Uniform	0,069	1.000	Length		0,000
LF1153	B1393	Wind	Y	0,069	0.000	Rela	From start	0,000
	Wy - Rüzgar	GCS	Uniform	0,069	1.000	Length		0,000
LF1154	B1396	Wind	Y	0,069	0.000	Rela	From start	0,000
	Wy - Rüzgar	GCS	Uniform	0,069	1.000	Length		0,000

Name	Member Load case	Type System	Dir Distribution	Value - P_1 [kN/m] Value - P_2 [kN/m]	Pos x_1 Pos x_2	Coor Loc	Orig	Ecc ey Ecc ez
LF1155	B1399	Wind	X	0,069	0.000	Rela	From start	0,000
	Wx - Rüzgar	GCS	Uniform	0,069	1.000	Length		0,000
LF1156	B1410	Wind	Y	0,048	0.000	Rela	From start	0,000
	Wy - Rüzgar	GCS	Uniform	0,048	1.000	Length		0,000
LF1157	B1411	Wind	Y	0,048	0.000	Rela	From start	0,000
	Wy - Rüzgar	GCS	Uniform	0,048	1.000	Length		0,000
LF1158	B1412	Wind	Y	0,048	0.000	Rela	From start	0,000
	Wy - Rüzgar	GCS	Uniform	0,048	1.000	Length		0,000
LF1159	B1413	Wind	Y	0,048	0.000	Rela	From start	0,000
	Wy - Rüzgar	GCS	Uniform	0,048	1.000	Length		0,000
LF1160	B1414	Wind	Y	0,048	0.000	Rela	From start	0,000
	Wy - Rüzgar	GCS	Uniform	0,048	1.000	Length		0,000
LF1161	B1415	Wind	Y	0,048	0.000	Rela	From start	0,000
	Wy - Rüzgar	GCS	Uniform	0,048	1.000	Length		0,000
LF1162	B1416	Wind	Y	0,048	0.000	Rela	From start	0,000
	Wy - Rüzgar	GCS	Uniform	0,048	1.000	Length		0,000
LF1163	B1417	Wind	Y	0,048	0.000	Rela	From start	0,000
	Wy - Rüzgar	GCS	Uniform	0,048	1.000	Length		0,000
LF1164	B1418	Wind	Y	0,048	0.000	Rela	From start	0,000
	Wy - Rüzgar	GCS	Uniform	0,048	1.000	Length		0,000
LF1165	B1419	Wind	Y	0,048	0.000	Rela	From start	0,000
	Wy - Rüzgar	GCS	Uniform	0,048	1.000	Length		0,000
LF1166	B1420	Wind	Y	0,048	0.000	Rela	From start	0,000
	Wy - Rüzgar	GCS	Uniform	0,048	1.000	Length		0,000
LF1167	B1421	Wind	Y	0,048	0.000	Rela	From start	0,000
	Wy - Rüzgar	GCS	Uniform	0,048	1.000	Length		0,000
LF1168	B1422	Wind	Y	0,048	0.000	Rela	From start	0,000
	Wy - Rüzgar	GCS	Uniform	0,048	1.000	Length		0,000
LF1169	B1423	Wind	Y	0,048	0.000	Rela	From start	0,000
	Wy - Rüzgar	GCS	Uniform	0,048	1.000	Length		0,000
LF1170	B1424	Wind	Y	0,048	0.000	Rela	From start	0,000
	Wy - Rüzgar	GCS	Uniform	0,048	1.000	Length		0,000
LF1171	B1425	Wind	Y	0,048	0.000	Rela	From start	0,000
	Wy - Rüzgar	GCS	Uniform	0,048	1.000	Length		0,000
LF1172	B1426	Wind	Y	0,048	0.000	Rela	From start	0,000
	Wy - Rüzgar	GCS	Uniform	0,048	1.000	Length		0,000
LF1173	B1427	Wind	Y	0,048	0.000	Rela	From start	0,000
	Wy - Rüzgar	GCS	Uniform	0,048	1.000	Length		0,000
LF1174	B1428	Wind	Y	0,048	0.000	Rela	From start	0,000
	Wy - Rüzgar	GCS	Uniform	0,048	1.000	Length		0,000
LF1175	B1429	Wind	Y	0,048	0.000	Rela	From start	0,000
	Wy - Rüzgar	GCS	Uniform	0,048	1.000	Length		0,000
LF1176	PL342	Wind	Y	0,429	0.000	Rela	From start	0,000
	Wy - Rüzgar	GCS	Uniform	0,429	1.000	Length		0,000
LF1177	PL344	Wind	Y	0,429	0.000	Rela	From start	0,000
	Wy - Rüzgar	GCS	Uniform	0,429	1.000	Length		0,000
LF1178	PL346	Wind	Y	0,429	0.000	Rela	From start	0,000
	Wy - Rüzgar	GCS	Uniform	0,429	1.000	Length		0,000
LF1179	PL348	Wind	Y	0,429	0.000	Rela	From start	0,000
	Wy - Rüzgar	GCS	Uniform	0,429	1.000	Length		0,000
LF1180	PL350	Wind	Y	0,429	0.000	Rela	From start	0,000
	Wy - Rüzgar	GCS	Uniform	0,429	1.000	Length		0,000
LF1181	PL352	Wind	Y	0,429	0.000	Rela	From start	0,000
	Wy - Rüzgar	GCS	Uniform	0,429	1.000	Length		0,000
LF1182	PL354	Wind	Y	0,429	0.000	Rela	From start	0,000
	Wy - Rüzgar	GCS	Uniform	0,429	1.000	Length		0,000
LF1183	PL356	Wind	Y	0,429	0.000	Rela	From start	0,000
	Wy - Rüzgar	GCS	Uniform	0,429	1.000	Length		0,000
LF1184	PL358	Wind	Y	0,429	0.000	Rela	From start	0,000
	Wy - Rüzgar	GCS	Uniform	0,429	1.000	Length		0,000
LF1185	PL360	Wind	Y	0,429	0.000	Rela	From start	0,000
	Wy - Rüzgar	GCS	Uniform	0,429	1.000	Length		0,000
LF1186	CP182	Wind	Y	0,054	0.000	Rela	From start	0,000
	Wy - Rüzgar	GCS	Uniform	0,054	1.000	Length		0,000
LF1187	CP183	Wind	Y	0,054	0.000	Rela	From start	0,000
	Wy - Rüzgar	GCS	Uniform	0,054	1.000	Length		0,000
LF1188	CP184	Wind	Y	0,054	0.000	Rela	From start	0,000
	Wy - Rüzgar	GCS	Uniform	0,054	1.000	Length		0,000
LF1189	CP185	Wind	Y	0,054	0.000	Rela	From start	0,000
	Wy - Rüzgar	GCS	Uniform	0,054	1.000	Length		0,000
LF1190	CP186	Wind	Y	0,054	0.000	Rela	From start	0,000
	Wy - Rüzgar	GCS	Uniform	0,054	1.000	Length		0,000
LF1191	CP187	Wind	Y	0,054	0.000	Rela	From start	0,000
	Wy - Rüzgar	GCS	Uniform	0,054	1.000	Length		0,000

Name	Member Load case	Type System	Dir Distribution	Value - P_1 [kN/m] Value - P_2 [kN/m]	Pos x_1 Pos x_2	Coor Loc	Orig	Ecc ey Ecc ez
LF1192	B1430	Wind	Y	0,069	0.000	Rela	From start	0,000
	Wy - Rüzgar	GCS	Uniform	0,069	1.000	Length		0,000
LF1193	B1430	Wind	X	0,069	0.000	Rela	From start	0,000
	Wx - Rüzgar	GCS	Uniform	0,069	1.000	Length		0,000
LF1194	B1431	Wind	X	0,069	0.000	Rela	From start	0,000
	Wx - Rüzgar	GCS	Uniform	0,069	1.000	Length		0,000
LF1195	B1432	Wind	Y	0,069	0.000	Rela	From start	0,000
	Wy - Rüzgar	GCS	Uniform	0,069	1.000	Length		0,000
LF1196	B1434	Wind	Y	0,069	0.000	Rela	From start	0,000
	Wy - Rüzgar	GCS	Uniform	0,069	1.000	Length		0,000
LF1197	B1436	Wind	Y	0,069	0.000	Rela	From start	0,000
	Wy - Rüzgar	GCS	Uniform	0,069	1.000	Length		0,000
LF1198	B1438	Wind	Y	0,069	0.000	Rela	From start	0,000
	Wy - Rüzgar	GCS	Uniform	0,069	1.000	Length		0,000
LF1199	B1440	Wind	Y	0,069	0.000	Rela	From start	0,000
	Wy - Rüzgar	GCS	Uniform	0,069	1.000	Length		0,000
LF1200	B1442	Wind	Y	0,069	0.000	Rela	From start	0,000
	Wy - Rüzgar	GCS	Uniform	0,069	1.000	Length		0,000
LF1201	B1444	Wind	Y	0,069	0.000	Rela	From start	0,000
	Wy - Rüzgar	GCS	Uniform	0,069	1.000	Length		0,000
LF1202	B1446	Wind	X	0,057	0.000	Rela	From start	0,000
	Wx - Rüzgar	GCS	Uniform	0,057	1.000	Length		0,000
LF1203	B1454	Wind	Y	0,069	0.000	Rela	From start	0,000
	Wy - Rüzgar	GCS	Uniform	0,069	1.000	Length		0,000
LF1204	B1457	Wind	Y	0,069	0.000	Rela	From start	0,000
	Wy - Rüzgar	GCS	Uniform	0,069	1.000	Length		0,000
LF1205	B1460	Wind	Y	0,069	0.000	Rela	From start	0,000
	Wy - Rüzgar	GCS	Uniform	0,069	1.000	Length		0,000
LF1206	B1463	Wind	X	0,069	0.000	Rela	From start	0,000
	Wx - Rüzgar	GCS	Uniform	0,069	1.000	Length		0,000
LF1207	B1474	Wind	Y	0,048	0.000	Rela	From start	0,000
	Wy - Rüzgar	GCS	Uniform	0,048	1.000	Length		0,000
LF1208	B1475	Wind	Y	0,048	0.000	Rela	From start	0,000
	Wy - Rüzgar	GCS	Uniform	0,048	1.000	Length		0,000
LF1209	B1476	Wind	Y	0,048	0.000	Rela	From start	0,000
	Wy - Rüzgar	GCS	Uniform	0,048	1.000	Length		0,000
LF1210	B1477	Wind	Y	0,048	0.000	Rela	From start	0,000
	Wy - Rüzgar	GCS	Uniform	0,048	1.000	Length		0,000
LF1211	B1478	Wind	Y	0,048	0.000	Rela	From start	0,000
	Wy - Rüzgar	GCS	Uniform	0,048	1.000	Length		0,000
LF1212	B1479	Wind	Y	0,048	0.000	Rela	From start	0,000
	Wy - Rüzgar	GCS	Uniform	0,048	1.000	Length		0,000
LF1213	B1480	Wind	Y	0,048	0.000	Rela	From start	0,000
	Wy - Rüzgar	GCS	Uniform	0,048	1.000	Length		0,000
LF1214	B1481	Wind	Y	0,048	0.000	Rela	From start	0,000
	Wy - Rüzgar	GCS	Uniform	0,048	1.000	Length		0,000
LF1215	B1482	Wind	Y	0,048	0.000	Rela	From start	0,000
	Wy - Rüzgar	GCS	Uniform	0,048	1.000	Length		0,000
LF1216	B1483	Wind	Y	0,048	0.000	Rela	From start	0,000
	Wy - Rüzgar	GCS	Uniform	0,048	1.000	Length		0,000
LF1217	B1484	Wind	Y	0,048	0.000	Rela	From start	0,000
	Wy - Rüzgar	GCS	Uniform	0,048	1.000	Length		0,000
LF1218	B1485	Wind	Y	0,048	0.000	Rela	From start	0,000
	Wy - Rüzgar	GCS	Uniform	0,048	1.000	Length		0,000
LF1219	B1486	Wind	Y	0,048	0.000	Rela	From start	0,000
	Wy - Rüzgar	GCS	Uniform	0,048	1.000	Length		0,000
LF1220	B1487	Wind	Y	0,048	0.000	Rela	From start	0,000
	Wy - Rüzgar	GCS	Uniform	0,048	1.000	Length		0,000
LF1221	B1488	Wind	Y	0,048	0.000	Rela	From start	0,000
	Wy - Rüzgar	GCS	Uniform	0,048	1.000	Length		0,000
LF1222	B1489	Wind	Y	0,048	0.000	Rela	From start	0,000
	Wy - Rüzgar	GCS	Uniform	0,048	1.000	Length		0,000
LF1223	B1490	Wind	Y	0,048	0.000	Rela	From start	0,000
	Wy - Rüzgar	GCS	Uniform	0,048	1.000	Length		0,000
LF1224	B1491	Wind	Y	0,048	0.000	Rela	From start	0,000
	Wy - Rüzgar	GCS	Uniform	0,048	1.000	Length		0,000
LF1225	B1492	Wind	Y	0,048	0.000	Rela	From start	0,000
	Wy - Rüzgar	GCS	Uniform	0,048	1.000	Length		0,000
LF1226	B1493	Wind	Y	0,048	0.000	Rela	From start	0,000
	Wy - Rüzgar	GCS	Uniform	0,048	1.000	Length		0,000
LF1227	PL362	Wind	Y	0,429	0.000	Rela	From start	0,000
	Wy - Rüzgar	GCS	Uniform	0,429	1.000	Length		0,000
LF1228	PL364	Wind	Y	0,429	0.000	Rela	From start	0,000
	Wy - Rüzgar	GCS	Uniform	0,429	1.000	Length		0,000

Name	Member Load case	Type System	Dir Distribution	Value - P_1 [kN/m] Value - P_2 [kN/m]	Pos x_1 Pos x_2	Coor Loc	Orig	Ecc ey Ecc ez
LF1229	PL366	Wind	Y	0,429	0.000	Rela	From start	0,000
	Wy - Rüzgar	GCS	Uniform	0,429	1.000	Length		0,000
LF1230	PL368	Wind	Y	0,429	0.000	Rela	From start	0,000
	Wy - Rüzgar	GCS	Uniform	0,429	1.000	Length		0,000
LF1231	PL370	Wind	Y	0,429	0.000	Rela	From start	0,000
	Wy - Rüzgar	GCS	Uniform	0,429	1.000	Length		0,000
LF1232	PL372	Wind	Y	0,429	0.000	Rela	From start	0,000
	Wy - Rüzgar	GCS	Uniform	0,429	1.000	Length		0,000
LF1233	PL374	Wind	Y	0,429	0.000	Rela	From start	0,000
	Wy - Rüzgar	GCS	Uniform	0,429	1.000	Length		0,000
LF1234	PL376	Wind	Y	0,429	0.000	Rela	From start	0,000
	Wy - Rüzgar	GCS	Uniform	0,429	1.000	Length		0,000
LF1235	PL378	Wind	Y	0,429	0.000	Rela	From start	0,000
	Wy - Rüzgar	GCS	Uniform	0,429	1.000	Length		0,000
LF1236	PL380	Wind	Y	0,429	0.000	Rela	From start	0,000
	Wy - Rüzgar	GCS	Uniform	0,429	1.000	Length		0,000
LF1237	CP188	Wind	Y	0,054	0.000	Rela	From start	0,000
	Wy - Rüzgar	GCS	Uniform	0,054	1.000	Length		0,000
LF1238	CP189	Wind	Y	0,054	0.000	Rela	From start	0,000
	Wy - Rüzgar	GCS	Uniform	0,054	1.000	Length		0,000
LF1239	CP190	Wind	Y	0,054	0.000	Rela	From start	0,000
	Wy - Rüzgar	GCS	Uniform	0,054	1.000	Length		0,000
LF1240	CP191	Wind	Y	0,054	0.000	Rela	From start	0,000
	Wy - Rüzgar	GCS	Uniform	0,054	1.000	Length		0,000
LF1241	CP192	Wind	Y	0,054	0.000	Rela	From start	0,000
	Wy - Rüzgar	GCS	Uniform	0,054	1.000	Length		0,000
LF1242	CP193	Wind	Y	0,054	0.000	Rela	From start	0,000
	Wy - Rüzgar	GCS	Uniform	0,054	1.000	Length		0,000
LF1243	B1494	Wind	Y	0,069	0.000	Rela	From start	0,000
	Wy - Rüzgar	GCS	Uniform	0,069	1.000	Length		0,000
LF1244	B1494	Wind	X	0,069	0.000	Rela	From start	0,000
	Wx - Rüzgar	GCS	Uniform	0,069	1.000	Length		0,000
LF1245	B1495	Wind	X	0,069	0.000	Rela	From start	0,000
	Wx - Rüzgar	GCS	Uniform	0,069	1.000	Length		0,000
LF1246	B1496	Wind	Y	0,069	0.000	Rela	From start	0,000
	Wy - Rüzgar	GCS	Uniform	0,069	1.000	Length		0,000
LF1247	B1498	Wind	Y	0,069	0.000	Rela	From start	0,000
	Wy - Rüzgar	GCS	Uniform	0,069	1.000	Length		0,000
LF1248	B1500	Wind	Y	0,069	0.000	Rela	From start	0,000
	Wy - Rüzgar	GCS	Uniform	0,069	1.000	Length		0,000
LF1249	B1502	Wind	Y	0,069	0.000	Rela	From start	0,000
	Wy - Rüzgar	GCS	Uniform	0,069	1.000	Length		0,000
LF1250	B1504	Wind	Y	0,069	0.000	Rela	From start	0,000
	Wy - Rüzgar	GCS	Uniform	0,069	1.000	Length		0,000
LF1251	B1506	Wind	Y	0,069	0.000	Rela	From start	0,000
	Wy - Rüzgar	GCS	Uniform	0,069	1.000	Length		0,000
LF1252	B1508	Wind	Y	0,069	0.000	Rela	From start	0,000
	Wy - Rüzgar	GCS	Uniform	0,069	1.000	Length		0,000
LF1253	B1510	Wind	X	0,057	0.000	Rela	From start	0,000
	Wx - Rüzgar	GCS	Uniform	0,057	1.000	Length		0,000
LF1254	B1518	Wind	Y	0,069	0.000	Rela	From start	0,000
	Wy - Rüzgar	GCS	Uniform	0,069	1.000	Length		0,000
LF1255	B1521	Wind	Y	0,069	0.000	Rela	From start	0,000
	Wy - Rüzgar	GCS	Uniform	0,069	1.000	Length		0,000
LF1256	B1524	Wind	Y	0,069	0.000	Rela	From start	0,000
	Wy - Rüzgar	GCS	Uniform	0,069	1.000	Length		0,000
LF1257	B1527	Wind	X	0,069	0.000	Rela	From start	0,000
	Wx - Rüzgar	GCS	Uniform	0,069	1.000	Length		0,000
LF1258	B1538	Wind	Y	0,048	0.000	Rela	From start	0,000
	Wy - Rüzgar	GCS	Uniform	0,048	1.000	Length		0,000
LF1259	B1539	Wind	Y	0,048	0.000	Rela	From start	0,000
	Wy - Rüzgar	GCS	Uniform	0,048	1.000	Length		0,000
LF1260	B1540	Wind	Y	0,048	0.000	Rela	From start	0,000
	Wy - Rüzgar	GCS	Uniform	0,048	1.000	Length		0,000
LF1261	B1541	Wind	Y	0,048	0.000	Rela	From start	0,000
	Wy - Rüzgar	GCS	Uniform	0,048	1.000	Length		0,000
LF1262	B1542	Wind	Y	0,048	0.000	Rela	From start	0,000
	Wy - Rüzgar	GCS	Uniform	0,048	1.000	Length		0,000
LF1263	B1543	Wind	Y	0,048	0.000	Rela	From start	0,000
	Wy - Rüzgar	GCS	Uniform	0,048	1.000	Length		0,000
LF1264	B1544	Wind	Y	0,048	0.000	Rela	From start	0,000
	Wy - Rüzgar	GCS	Uniform	0,048	1.000	Length		0,000
LF1265	B1545	Wind	Y	0,048	0.000	Rela	From start	0,000
	Wy - Rüzgar	GCS	Uniform	0,048	1.000	Length		0,000

Name	Member Load case	Type System	Dir Distribution	Value - P_1 [kN/m] Value - P_2 [kN/m]	Pos x_1 Pos x_2	Coor Loc	Orig	Ecc ey Ecc ez
LF1266	B1546	Wind	Y	0,048	0.000	Rela	From start	0,000
	Wy - Rüzgar	GCS	Uniform	0,048	1.000	Length		0,000
LF1267	B1547	Wind	Y	0,048	0.000	Rela	From start	0,000
	Wy - Rüzgar	GCS	Uniform	0,048	1.000	Length		0,000
LF1268	B1548	Wind	Y	0,048	0.000	Rela	From start	0,000
	Wy - Rüzgar	GCS	Uniform	0,048	1.000	Length		0,000
LF1269	B1549	Wind	Y	0,048	0.000	Rela	From start	0,000
	Wy - Rüzgar	GCS	Uniform	0,048	1.000	Length		0,000
LF1270	B1550	Wind	Y	0,048	0.000	Rela	From start	0,000
	Wy - Rüzgar	GCS	Uniform	0,048	1.000	Length		0,000
LF1271	B1551	Wind	Y	0,048	0.000	Rela	From start	0,000
	Wy - Rüzgar	GCS	Uniform	0,048	1.000	Length		0,000
LF1272	B1552	Wind	Y	0,048	0.000	Rela	From start	0,000
	Wy - Rüzgar	GCS	Uniform	0,048	1.000	Length		0,000
LF1273	B1553	Wind	Y	0,048	0.000	Rela	From start	0,000
	Wy - Rüzgar	GCS	Uniform	0,048	1.000	Length		0,000
LF1274	B1554	Wind	Y	0,048	0.000	Rela	From start	0,000
	Wy - Rüzgar	GCS	Uniform	0,048	1.000	Length		0,000
LF1275	B1555	Wind	Y	0,048	0.000	Rela	From start	0,000
	Wy - Rüzgar	GCS	Uniform	0,048	1.000	Length		0,000
LF1276	B1556	Wind	Y	0,048	0.000	Rela	From start	0,000
	Wy - Rüzgar	GCS	Uniform	0,048	1.000	Length		0,000
LF1277	B1557	Wind	Y	0,048	0.000	Rela	From start	0,000
	Wy - Rüzgar	GCS	Uniform	0,048	1.000	Length		0,000
LF1278	PL382	Wind	Y	0,429	0.000	Rela	From start	0,000
	Wy - Rüzgar	GCS	Uniform	0,429	1.000	Length		0,000
LF1279	PL384	Wind	Y	0,429	0.000	Rela	From start	0,000
	Wy - Rüzgar	GCS	Uniform	0,429	1.000	Length		0,000
LF1280	PL386	Wind	Y	0,429	0.000	Rela	From start	0,000
	Wy - Rüzgar	GCS	Uniform	0,429	1.000	Length		0,000
LF1281	PL388	Wind	Y	0,429	0.000	Rela	From start	0,000
	Wy - Rüzgar	GCS	Uniform	0,429	1.000	Length		0,000
LF1282	PL390	Wind	Y	0,429	0.000	Rela	From start	0,000
	Wy - Rüzgar	GCS	Uniform	0,429	1.000	Length		0,000
LF1283	PL392	Wind	Y	0,429	0.000	Rela	From start	0,000
	Wy - Rüzgar	GCS	Uniform	0,429	1.000	Length		0,000
LF1284	PL394	Wind	Y	0,429	0.000	Rela	From start	0,000
	Wy - Rüzgar	GCS	Uniform	0,429	1.000	Length		0,000
LF1285	PL396	Wind	Y	0,429	0.000	Rela	From start	0,000
	Wy - Rüzgar	GCS	Uniform	0,429	1.000	Length		0,000
LF1286	PL398	Wind	Y	0,429	0.000	Rela	From start	0,000
	Wy - Rüzgar	GCS	Uniform	0,429	1.000	Length		0,000
LF1287	PL400	Wind	Y	0,429	0.000	Rela	From start	0,000
	Wy - Rüzgar	GCS	Uniform	0,429	1.000	Length		0,000
LF1288	CP194	Wind	Y	0,054	0.000	Rela	From start	0,000
	Wy - Rüzgar	GCS	Uniform	0,054	1.000	Length		0,000
LF1289	CP195	Wind	Y	0,054	0.000	Rela	From start	0,000
	Wy - Rüzgar	GCS	Uniform	0,054	1.000	Length		0,000
LF1290	CP196	Wind	Y	0,054	0.000	Rela	From start	0,000
	Wy - Rüzgar	GCS	Uniform	0,054	1.000	Length		0,000
LF1291	CP197	Wind	Y	0,054	0.000	Rela	From start	0,000
	Wy - Rüzgar	GCS	Uniform	0,054	1.000	Length		0,000
LF1292	CP198	Wind	Y	0,054	0.000	Rela	From start	0,000
	Wy - Rüzgar	GCS	Uniform	0,054	1.000	Length		0,000
LF1293	CP199	Wind	Y	0,054	0.000	Rela	From start	0,000
	Wy - Rüzgar	GCS	Uniform	0,054	1.000	Length		0,000
LF1294	B1558	Wind	Y	0,069	0.000	Rela	From start	0,000
	Wy - Rüzgar	GCS	Uniform	0,069	1.000	Length		0,000
LF1295	B1558	Wind	X	0,069	0.000	Rela	From start	0,000
	Wx - Rüzgar	GCS	Uniform	0,069	1.000	Length		0,000
LF1296	B1559	Wind	X	0,069	0.000	Rela	From start	0,000
	Wx - Rüzgar	GCS	Uniform	0,069	1.000	Length		0,000
LF1297	B1560	Wind	Y	0,069	0.000	Rela	From start	0,000
	Wy - Rüzgar	GCS	Uniform	0,069	1.000	Length		0,000
LF1298	B1562	Wind	Y	0,069	0.000	Rela	From start	0,000
	Wy - Rüzgar	GCS	Uniform	0,069	1.000	Length		0,000
LF1299	B1564	Wind	Y	0,069	0.000	Rela	From start	0,000
	Wy - Rüzgar	GCS	Uniform	0,069	1.000	Length		0,000
LF1300	B1566	Wind	Y	0,069	0.000	Rela	From start	0,000
	Wy - Rüzgar	GCS	Uniform	0,069	1.000	Length		0,000
LF1301	B1568	Wind	Y	0,069	0.000	Rela	From start	0,000
	Wy - Rüzgar	GCS	Uniform	0,069	1.000	Length		0,000
LF1302	B1570	Wind	Y	0,069	0.000	Rela	From start	0,000
	Wy - Rüzgar	GCS	Uniform	0,069	1.000	Length		0,000

Name	Member Load case	Type System	Dir Distribution	Value - P_1 [kN/m] Value - P_2 [kN/m]	Pos x_1 Pos x_2	Coor Loc	Orig	Ecc ey Ecc ez
LF1303	B1572	Wind	Y	0,069	0.000	Rela	From start	0,000
	Wy - Rüzgar	GCS	Uniform	0,069	1.000	Length		0,000
LF1304	B1574	Wind	X	0,057	0.000	Rela	From start	0,000
	Wx - Rüzgar	GCS	Uniform	0,057	1.000	Length		0,000
LF1305	B1582	Wind	Y	0,069	0.000	Rela	From start	0,000
	Wy - Rüzgar	GCS	Uniform	0,069	1.000	Length		0,000
LF1306	B1585	Wind	Y	0,069	0.000	Rela	From start	0,000
	Wy - Rüzgar	GCS	Uniform	0,069	1.000	Length		0,000
LF1307	B1588	Wind	Y	0,069	0.000	Rela	From start	0,000
	Wy - Rüzgar	GCS	Uniform	0,069	1.000	Length		0,000
LF1308	B1591	Wind	X	0,069	0.000	Rela	From start	0,000
	Wx - Rüzgar	GCS	Uniform	0,069	1.000	Length		0,000
LF1309	B1602	Wind	Y	0,048	0.000	Rela	From start	0,000
	Wy - Rüzgar	GCS	Uniform	0,048	1.000	Length		0,000
LF1310	B1603	Wind	Y	0,048	0.000	Rela	From start	0,000
	Wy - Rüzgar	GCS	Uniform	0,048	1.000	Length		0,000
LF1311	B1604	Wind	Y	0,048	0.000	Rela	From start	0,000
	Wy - Rüzgar	GCS	Uniform	0,048	1.000	Length		0,000
LF1312	B1605	Wind	Y	0,048	0.000	Rela	From start	0,000
	Wy - Rüzgar	GCS	Uniform	0,048	1.000	Length		0,000
LF1313	B1606	Wind	Y	0,048	0.000	Rela	From start	0,000
	Wy - Rüzgar	GCS	Uniform	0,048	1.000	Length		0,000
LF1314	B1607	Wind	Y	0,048	0.000	Rela	From start	0,000
	Wy - Rüzgar	GCS	Uniform	0,048	1.000	Length		0,000
LF1315	B1608	Wind	Y	0,048	0.000	Rela	From start	0,000
	Wy - Rüzgar	GCS	Uniform	0,048	1.000	Length		0,000
LF1316	B1609	Wind	Y	0,048	0.000	Rela	From start	0,000
	Wy - Rüzgar	GCS	Uniform	0,048	1.000	Length		0,000
LF1317	B1610	Wind	Y	0,048	0.000	Rela	From start	0,000
	Wy - Rüzgar	GCS	Uniform	0,048	1.000	Length		0,000
LF1318	B1611	Wind	Y	0,048	0.000	Rela	From start	0,000
	Wy - Rüzgar	GCS	Uniform	0,048	1.000	Length		0,000
LF1319	B1612	Wind	Y	0,048	0.000	Rela	From start	0,000
	Wy - Rüzgar	GCS	Uniform	0,048	1.000	Length		0,000
LF1320	B1613	Wind	Y	0,048	0.000	Rela	From start	0,000
	Wy - Rüzgar	GCS	Uniform	0,048	1.000	Length		0,000
LF1321	B1614	Wind	Y	0,048	0.000	Rela	From start	0,000
	Wy - Rüzgar	GCS	Uniform	0,048	1.000	Length		0,000
LF1322	B1615	Wind	Y	0,048	0.000	Rela	From start	0,000
	Wy - Rüzgar	GCS	Uniform	0,048	1.000	Length		0,000
LF1323	B1616	Wind	Y	0,048	0.000	Rela	From start	0,000
	Wy - Rüzgar	GCS	Uniform	0,048	1.000	Length		0,000
LF1324	B1617	Wind	Y	0,048	0.000	Rela	From start	0,000
	Wy - Rüzgar	GCS	Uniform	0,048	1.000	Length		0,000
LF1325	B1618	Wind	Y	0,048	0.000	Rela	From start	0,000
	Wy - Rüzgar	GCS	Uniform	0,048	1.000	Length		0,000
LF1326	B1619	Wind	Y	0,048	0.000	Rela	From start	0,000
	Wy - Rüzgar	GCS	Uniform	0,048	1.000	Length		0,000
LF1327	B1620	Wind	Y	0,048	0.000	Rela	From start	0,000
	Wy - Rüzgar	GCS	Uniform	0,048	1.000	Length		0,000
LF1328	B1621	Wind	Y	0,048	0.000	Rela	From start	0,000
	Wy - Rüzgar	GCS	Uniform	0,048	1.000	Length		0,000
LF1329	PL402	Wind	Y	0,429	0.000	Rela	From start	0,000
	Wy - Rüzgar	GCS	Uniform	0,429	1.000	Length		0,000
LF1330	PL404	Wind	Y	0,429	0.000	Rela	From start	0,000
	Wy - Rüzgar	GCS	Uniform	0,429	1.000	Length		0,000
LF1331	PL406	Wind	Y	0,429	0.000	Rela	From start	0,000
	Wy - Rüzgar	GCS	Uniform	0,429	1.000	Length		0,000
LF1332	PL408	Wind	Y	0,429	0.000	Rela	From start	0,000
	Wy - Rüzgar	GCS	Uniform	0,429	1.000	Length		0,000
LF1333	PL410	Wind	Y	0,429	0.000	Rela	From start	0,000
	Wy - Rüzgar	GCS	Uniform	0,429	1.000	Length		0,000
LF1334	PL412	Wind	Y	0,429	0.000	Rela	From start	0,000
	Wy - Rüzgar	GCS	Uniform	0,429	1.000	Length		0,000
LF1335	PL414	Wind	Y	0,429	0.000	Rela	From start	0,000
	Wy - Rüzgar	GCS	Uniform	0,429	1.000	Length		0,000
LF1336	PL416	Wind	Y	0,429	0.000	Rela	From start	0,000
	Wy - Rüzgar	GCS	Uniform	0,429	1.000	Length		0,000
LF1337	PL418	Wind	Y	0,429	0.000	Rela	From start	0,000
	Wy - Rüzgar	GCS	Uniform	0,429	1.000	Length		0,000
LF1338	PL420	Wind	Y	0,429	0.000	Rela	From start	0,000
	Wy - Rüzgar	GCS	Uniform	0,429	1.000	Length		0,000
LF1339	CP200	Wind	Y	0,054	0.000	Rela	From start	0,000
	Wy - Rüzgar	GCS	Uniform	0,054	1.000	Length		0,000

Name	Member Load case	Type System	Dir Distribution	Value - P_1 [kN/m] Value - P_2 [kN/m]	Pos x_1 Pos x_2	Coor Loc	Orig	Ecc ey Ecc ez
LF1340	CP201	Wind	Y	0,054	0.000	Rela	From start	0,000
	Wy - Rüzgar	GCS	Uniform	0,054	1.000	Length		0,000
LF1341	CP202	Wind	Y	0,054	0.000	Rela	From start	0,000
	Wy - Rüzgar	GCS	Uniform	0,054	1.000	Length		0,000
LF1342	CP203	Wind	Y	0,054	0.000	Rela	From start	0,000
	Wy - Rüzgar	GCS	Uniform	0,054	1.000	Length		0,000
LF1343	CP204	Wind	Y	0,054	0.000	Rela	From start	0,000
	Wy - Rüzgar	GCS	Uniform	0,054	1.000	Length		0,000
LF1344	CP205	Wind	Y	0,054	0.000	Rela	From start	0,000
	Wy - Rüzgar	GCS	Uniform	0,054	1.000	Length		0,000
LF1345	B1622	Wind	Y	0,069	0.000	Rela	From start	0,000
	Wy - Rüzgar	GCS	Uniform	0,069	1.000	Length		0,000
LF1346	B1622	Wind	X	0,069	0.000	Rela	From start	0,000
	Wx - Rüzgar	GCS	Uniform	0,069	1.000	Length		0,000
LF1347	B1623	Wind	X	0,069	0.000	Rela	From start	0,000
	Wx - Rüzgar	GCS	Uniform	0,069	1.000	Length		0,000
LF1348	B1624	Wind	Y	0,069	0.000	Rela	From start	0,000
	Wy - Rüzgar	GCS	Uniform	0,069	1.000	Length		0,000
LF1349	B1626	Wind	Y	0,069	0.000	Rela	From start	0,000
	Wy - Rüzgar	GCS	Uniform	0,069	1.000	Length		0,000
LF1350	B1628	Wind	Y	0,069	0.000	Rela	From start	0,000
	Wy - Rüzgar	GCS	Uniform	0,069	1.000	Length		0,000
LF1351	B1630	Wind	Y	0,069	0.000	Rela	From start	0,000
	Wy - Rüzgar	GCS	Uniform	0,069	1.000	Length		0,000
LF1352	B1632	Wind	Y	0,069	0.000	Rela	From start	0,000
	Wy - Rüzgar	GCS	Uniform	0,069	1.000	Length		0,000
LF1353	B1634	Wind	Y	0,069	0.000	Rela	From start	0,000
	Wy - Rüzgar	GCS	Uniform	0,069	1.000	Length		0,000
LF1354	B1636	Wind	Y	0,069	0.000	Rela	From start	0,000
	Wy - Rüzgar	GCS	Uniform	0,069	1.000	Length		0,000
LF1355	B1638	Wind	X	0,057	0.000	Rela	From start	0,000
	Wx - Rüzgar	GCS	Uniform	0,057	1.000	Length		0,000
LF1356	B1646	Wind	Y	0,069	0.000	Rela	From start	0,000
	Wy - Rüzgar	GCS	Uniform	0,069	1.000	Length		0,000
LF1357	B1649	Wind	Y	0,069	0.000	Rela	From start	0,000
	Wy - Rüzgar	GCS	Uniform	0,069	1.000	Length		0,000
LF1358	B1652	Wind	Y	0,069	0.000	Rela	From start	0,000
	Wy - Rüzgar	GCS	Uniform	0,069	1.000	Length		0,000
LF1359	B1655	Wind	X	0,069	0.000	Rela	From start	0,000
	Wx - Rüzgar	GCS	Uniform	0,069	1.000	Length		0,000
LF1360	B1666	Wind	Y	0,048	0.000	Rela	From start	0,000
	Wy - Rüzgar	GCS	Uniform	0,048	1.000	Length		0,000
LF1361	B1667	Wind	Y	0,048	0.000	Rela	From start	0,000
	Wy - Rüzgar	GCS	Uniform	0,048	1.000	Length		0,000
LF1362	B1668	Wind	Y	0,048	0.000	Rela	From start	0,000
	Wy - Rüzgar	GCS	Uniform	0,048	1.000	Length		0,000
LF1363	B1669	Wind	Y	0,048	0.000	Rela	From start	0,000
	Wy - Rüzgar	GCS	Uniform	0,048	1.000	Length		0,000
LF1364	B1670	Wind	Y	0,048	0.000	Rela	From start	0,000
	Wy - Rüzgar	GCS	Uniform	0,048	1.000	Length		0,000
LF1365	B1671	Wind	Y	0,048	0.000	Rela	From start	0,000
	Wy - Rüzgar	GCS	Uniform	0,048	1.000	Length		0,000
LF1366	B1672	Wind	Y	0,048	0.000	Rela	From start	0,000
	Wy - Rüzgar	GCS	Uniform	0,048	1.000	Length		0,000
LF1367	B1673	Wind	Y	0,048	0.000	Rela	From start	0,000
	Wy - Rüzgar	GCS	Uniform	0,048	1.000	Length		0,000
LF1368	B1674	Wind	Y	0,048	0.000	Rela	From start	0,000
	Wy - Rüzgar	GCS	Uniform	0,048	1.000	Length		0,000
LF1369	B1675	Wind	Y	0,048	0.000	Rela	From start	0,000
	Wy - Rüzgar	GCS	Uniform	0,048	1.000	Length		0,000
LF1370	B1676	Wind	Y	0,048	0.000	Rela	From start	0,000
	Wy - Rüzgar	GCS	Uniform	0,048	1.000	Length		0,000
LF1371	B1677	Wind	Y	0,048	0.000	Rela	From start	0,000
	Wy - Rüzgar	GCS	Uniform	0,048	1.000	Length		0,000
LF1372	B1678	Wind	Y	0,048	0.000	Rela	From start	0,000
	Wy - Rüzgar	GCS	Uniform	0,048	1.000	Length		0,000
LF1373	B1679	Wind	Y	0,048	0.000	Rela	From start	0,000
	Wy - Rüzgar	GCS	Uniform	0,048	1.000	Length		0,000
LF1374	B1680	Wind	Y	0,048	0.000	Rela	From start	0,000
	Wy - Rüzgar	GCS	Uniform	0,048	1.000	Length		0,000
LF1375	B1681	Wind	Y	0,048	0.000	Rela	From start	0,000
	Wy - Rüzgar	GCS	Uniform	0,048	1.000	Length		0,000
LF1376	B1682	Wind	Y	0,048	0.000	Rela	From start	0,000
	Wy - Rüzgar	GCS	Uniform	0,048	1.000	Length		0,000

Name	Member Load case	Type System	Dir Distribution	Value - P_1 [kN/m] Value - P_2 [kN/m]	Pos x_1 Pos x_2	Coor Loc	Orig	Ecc ey Ecc ez
LF1377	B1683	Wind	Y	0,048	0.000	Rela	From start	0,000
	Wy - Rüzgar	GCS	Uniform	0,048	1.000	Length		0,000
LF1378	B1684	Wind	Y	0,048	0.000	Rela	From start	0,000
	Wy - Rüzgar	GCS	Uniform	0,048	1.000	Length		0,000
LF1379	B1685	Wind	Y	0,048	0.000	Rela	From start	0,000
	Wy - Rüzgar	GCS	Uniform	0,048	1.000	Length		0,000
LF1380	PL422	Wind	Y	0,429	0.000	Rela	From start	0,000
	Wy - Rüzgar	GCS	Uniform	0,429	1.000	Length		0,000
LF1381	PL424	Wind	Y	0,429	0.000	Rela	From start	0,000
	Wy - Rüzgar	GCS	Uniform	0,429	1.000	Length		0,000
LF1382	PL426	Wind	Y	0,429	0.000	Rela	From start	0,000
	Wy - Rüzgar	GCS	Uniform	0,429	1.000	Length		0,000
LF1383	PL428	Wind	Y	0,429	0.000	Rela	From start	0,000
	Wy - Rüzgar	GCS	Uniform	0,429	1.000	Length		0,000
LF1384	PL430	Wind	Y	0,429	0.000	Rela	From start	0,000
	Wy - Rüzgar	GCS	Uniform	0,429	1.000	Length		0,000
LF1385	PL432	Wind	Y	0,429	0.000	Rela	From start	0,000
	Wy - Rüzgar	GCS	Uniform	0,429	1.000	Length		0,000
LF1386	PL434	Wind	Y	0,429	0.000	Rela	From start	0,000
	Wy - Rüzgar	GCS	Uniform	0,429	1.000	Length		0,000
LF1387	PL436	Wind	Y	0,429	0.000	Rela	From start	0,000
	Wy - Rüzgar	GCS	Uniform	0,429	1.000	Length		0,000
LF1388	PL438	Wind	Y	0,429	0.000	Rela	From start	0,000
	Wy - Rüzgar	GCS	Uniform	0,429	1.000	Length		0,000
LF1389	PL440	Wind	Y	0,429	0.000	Rela	From start	0,000
	Wy - Rüzgar	GCS	Uniform	0,429	1.000	Length		0,000
LF1390	CP206	Wind	Y	0,054	0.000	Rela	From start	0,000
	Wy - Rüzgar	GCS	Uniform	0,054	1.000	Length		0,000
LF1391	CP207	Wind	Y	0,054	0.000	Rela	From start	0,000
	Wy - Rüzgar	GCS	Uniform	0,054	1.000	Length		0,000
LF1392	CP208	Wind	Y	0,054	0.000	Rela	From start	0,000
	Wy - Rüzgar	GCS	Uniform	0,054	1.000	Length		0,000
LF1393	CP209	Wind	Y	0,054	0.000	Rela	From start	0,000
	Wy - Rüzgar	GCS	Uniform	0,054	1.000	Length		0,000
LF1394	CP210	Wind	Y	0,054	0.000	Rela	From start	0,000
	Wy - Rüzgar	GCS	Uniform	0,054	1.000	Length		0,000
LF1395	CP211	Wind	Y	0,054	0.000	Rela	From start	0,000
	Wy - Rüzgar	GCS	Uniform	0,054	1.000	Length		0,000
LF1396	B1686	Wind	Y	0,069	0.000	Rela	From start	0,000
	Wy - Rüzgar	GCS	Uniform	0,069	1.000	Length		0,000
LF1397	B1686	Wind	X	0,069	0.000	Rela	From start	0,000
	Wx - Rüzgar	GCS	Uniform	0,069	1.000	Length		0,000
LF1398	B1687	Wind	X	0,069	0.000	Rela	From start	0,000
	Wx - Rüzgar	GCS	Uniform	0,069	1.000	Length		0,000
LF1399	B1688	Wind	Y	0,069	0.000	Rela	From start	0,000
	Wy - Rüzgar	GCS	Uniform	0,069	1.000	Length		0,000
LF1400	B1690	Wind	Y	0,069	0.000	Rela	From start	0,000
	Wy - Rüzgar	GCS	Uniform	0,069	1.000	Length		0,000
LF1401	B1692	Wind	Y	0,069	0.000	Rela	From start	0,000
	Wy - Rüzgar	GCS	Uniform	0,069	1.000	Length		0,000
LF1402	B1694	Wind	Y	0,069	0.000	Rela	From start	0,000
	Wy - Rüzgar	GCS	Uniform	0,069	1.000	Length		0,000
LF1403	B1696	Wind	Y	0,069	0.000	Rela	From start	0,000
	Wy - Rüzgar	GCS	Uniform	0,069	1.000	Length		0,000
LF1404	B1698	Wind	Y	0,069	0.000	Rela	From start	0,000
	Wy - Rüzgar	GCS	Uniform	0,069	1.000	Length		0,000
LF1405	B1700	Wind	Y	0,069	0.000	Rela	From start	0,000
	Wy - Rüzgar	GCS	Uniform	0,069	1.000	Length		0,000
LF1406	B1702	Wind	X	0,057	0.000	Rela	From start	0,000
	Wx - Rüzgar	GCS	Uniform	0,057	1.000	Length		0,000
LF1407	B1710	Wind	Y	0,069	0.000	Rela	From start	0,000
	Wy - Rüzgar	GCS	Uniform	0,069	1.000	Length		0,000
LF1408	B1713	Wind	Y	0,069	0.000	Rela	From start	0,000
	Wy - Rüzgar	GCS	Uniform	0,069	1.000	Length		0,000
LF1409	B1716	Wind	Y	0,069	0.000	Rela	From start	0,000
	Wy - Rüzgar	GCS	Uniform	0,069	1.000	Length		0,000
LF1410	B1719	Wind	X	0,069	0.000	Rela	From start	0,000
	Wx - Rüzgar	GCS	Uniform	0,069	1.000	Length		0,000
LF1411	B1730	Wind	Y	0,048	0.000	Rela	From start	0,000
	Wy - Rüzgar	GCS	Uniform	0,048	1.000	Length		0,000
LF1412	B1731	Wind	Y	0,048	0.000	Rela	From start	0,000
	Wy - Rüzgar	GCS	Uniform	0,048	1.000	Length		0,000
LF1413	B1732	Wind	Y	0,048	0.000	Rela	From start	0,000
	Wy - Rüzgar	GCS	Uniform	0,048	1.000	Length		0,000

Name	Member Load case	Type System	Dir Distribution	Value - P_1 [kN/m] Value - P_2 [kN/m]	Pos x_1 Pos x_2	Coor Loc	Orig	Ecc ey Ecc ez
LF1414	B1733	Wind	Y	0,048	0.000	Rela	From start	0,000
	Wy - Rüzgar	GCS	Uniform	0,048	1.000	Length		0,000
LF1415	B1734	Wind	Y	0,048	0.000	Rela	From start	0,000
	Wy - Rüzgar	GCS	Uniform	0,048	1.000	Length		0,000
LF1416	B1735	Wind	Y	0,048	0.000	Rela	From start	0,000
	Wy - Rüzgar	GCS	Uniform	0,048	1.000	Length		0,000
LF1417	B1736	Wind	Y	0,048	0.000	Rela	From start	0,000
	Wy - Rüzgar	GCS	Uniform	0,048	1.000	Length		0,000
LF1418	B1737	Wind	Y	0,048	0.000	Rela	From start	0,000
	Wy - Rüzgar	GCS	Uniform	0,048	1.000	Length		0,000
LF1419	B1738	Wind	Y	0,048	0.000	Rela	From start	0,000
	Wy - Rüzgar	GCS	Uniform	0,048	1.000	Length		0,000
LF1420	B1739	Wind	Y	0,048	0.000	Rela	From start	0,000
	Wy - Rüzgar	GCS	Uniform	0,048	1.000	Length		0,000
LF1421	B1740	Wind	Y	0,048	0.000	Rela	From start	0,000
	Wy - Rüzgar	GCS	Uniform	0,048	1.000	Length		0,000
LF1422	B1741	Wind	Y	0,048	0.000	Rela	From start	0,000
	Wy - Rüzgar	GCS	Uniform	0,048	1.000	Length		0,000
LF1423	B1742	Wind	Y	0,048	0.000	Rela	From start	0,000
	Wy - Rüzgar	GCS	Uniform	0,048	1.000	Length		0,000
LF1424	B1743	Wind	Y	0,048	0.000	Rela	From start	0,000
	Wy - Rüzgar	GCS	Uniform	0,048	1.000	Length		0,000
LF1425	B1744	Wind	Y	0,048	0.000	Rela	From start	0,000
	Wy - Rüzgar	GCS	Uniform	0,048	1.000	Length		0,000
LF1426	B1745	Wind	Y	0,048	0.000	Rela	From start	0,000
	Wy - Rüzgar	GCS	Uniform	0,048	1.000	Length		0,000
LF1427	B1746	Wind	Y	0,048	0.000	Rela	From start	0,000
	Wy - Rüzgar	GCS	Uniform	0,048	1.000	Length		0,000
LF1428	B1747	Wind	Y	0,048	0.000	Rela	From start	0,000
	Wy - Rüzgar	GCS	Uniform	0,048	1.000	Length		0,000
LF1429	B1748	Wind	Y	0,048	0.000	Rela	From start	0,000
	Wy - Rüzgar	GCS	Uniform	0,048	1.000	Length		0,000
LF1430	B1749	Wind	Y	0,048	0.000	Rela	From start	0,000
	Wy - Rüzgar	GCS	Uniform	0,048	1.000	Length		0,000
LF1431	PL442	Wind	Y	0,429	0.000	Rela	From start	0,000
	Wy - Rüzgar	GCS	Uniform	0,429	1.000	Length		0,000
LF1432	PL444	Wind	Y	0,429	0.000	Rela	From start	0,000
	Wy - Rüzgar	GCS	Uniform	0,429	1.000	Length		0,000
LF1433	PL446	Wind	Y	0,429	0.000	Rela	From start	0,000
	Wy - Rüzgar	GCS	Uniform	0,429	1.000	Length		0,000
LF1434	PL448	Wind	Y	0,429	0.000	Rela	From start	0,000
	Wy - Rüzgar	GCS	Uniform	0,429	1.000	Length		0,000
LF1435	PL450	Wind	Y	0,429	0.000	Rela	From start	0,000
	Wy - Rüzgar	GCS	Uniform	0,429	1.000	Length		0,000
LF1436	PL452	Wind	Y	0,429	0.000	Rela	From start	0,000
	Wy - Rüzgar	GCS	Uniform	0,429	1.000	Length		0,000
LF1437	PL454	Wind	Y	0,429	0.000	Rela	From start	0,000
	Wy - Rüzgar	GCS	Uniform	0,429	1.000	Length		0,000
LF1438	PL456	Wind	Y	0,429	0.000	Rela	From start	0,000
	Wy - Rüzgar	GCS	Uniform	0,429	1.000	Length		0,000
LF1439	PL458	Wind	Y	0,429	0.000	Rela	From start	0,000
	Wy - Rüzgar	GCS	Uniform	0,429	1.000	Length		0,000
LF1440	PL460	Wind	Y	0,429	0.000	Rela	From start	0,000
	Wy - Rüzgar	GCS	Uniform	0,429	1.000	Length		0,000
LF1441	CP212	Wind	Y	0,054	0.000	Rela	From start	0,000
	Wy - Rüzgar	GCS	Uniform	0,054	1.000	Length		0,000
LF1442	CP213	Wind	Y	0,054	0.000	Rela	From start	0,000
	Wy - Rüzgar	GCS	Uniform	0,054	1.000	Length		0,000
LF1443	CP214	Wind	Y	0,054	0.000	Rela	From start	0,000
	Wy - Rüzgar	GCS	Uniform	0,054	1.000	Length		0,000
LF1444	CP215	Wind	Y	0,054	0.000	Rela	From start	0,000
	Wy - Rüzgar	GCS	Uniform	0,054	1.000	Length		0,000
LF1445	CP216	Wind	Y	0,054	0.000	Rela	From start	0,000
	Wy - Rüzgar	GCS	Uniform	0,054	1.000	Length		0,000
LF1446	CP217	Wind	Y	0,054	0.000	Rela	From start	0,000
	Wy - Rüzgar	GCS	Uniform	0,054	1.000	Length		0,000
LF1447	B1750	Wind	Y	0,069	0.000	Rela	From start	0,000
	Wy - Rüzgar	GCS	Uniform	0,069	1.000	Length		0,000
LF1448	B1750	Wind	X	0,069	0.000	Rela	From start	0,000
	Wx - Rüzgar	GCS	Uniform	0,069	1.000	Length		0,000
LF1449	B1751	Wind	X	0,069	0.000	Rela	From start	0,000
	Wx - Rüzgar	GCS	Uniform	0,069	1.000	Length		0,000
LF1450	B1752	Wind	Y	0,069	0.000	Rela	From start	0,000
	Wy - Rüzgar	GCS	Uniform	0,069	1.000	Length		0,000

Name	Member Load case	Type System	Dir Distribution	Value - P_1 [kN/m] Value - P_2 [kN/m]	Pos x_1 Pos x_2	Coor Loc	Orig	Ecc ey Ecc ez
LF1451	B1754	Wind	Y	0,069	0.000	Rela	From start	0,000
	Wy - Rüzgar	GCS	Uniform	0,069	1.000	Length		0,000
LF1452	B1756	Wind	Y	0,069	0.000	Rela	From start	0,000
	Wy - Rüzgar	GCS	Uniform	0,069	1.000	Length		0,000
LF1453	B1758	Wind	Y	0,069	0.000	Rela	From start	0,000
	Wy - Rüzgar	GCS	Uniform	0,069	1.000	Length		0,000
LF1454	B1760	Wind	Y	0,069	0.000	Rela	From start	0,000
	Wy - Rüzgar	GCS	Uniform	0,069	1.000	Length		0,000
LF1455	B1762	Wind	Y	0,069	0.000	Rela	From start	0,000
	Wy - Rüzgar	GCS	Uniform	0,069	1.000	Length		0,000
LF1456	B1764	Wind	Y	0,069	0.000	Rela	From start	0,000
	Wy - Rüzgar	GCS	Uniform	0,069	1.000	Length		0,000
LF1457	B1766	Wind	X	0,057	0.000	Rela	From start	0,000
	Wx - Rüzgar	GCS	Uniform	0,057	1.000	Length		0,000
LF1458	B1774	Wind	Y	0,069	0.000	Rela	From start	0,000
	Wy - Rüzgar	GCS	Uniform	0,069	1.000	Length		0,000
LF1459	B1777	Wind	Y	0,069	0.000	Rela	From start	0,000
	Wy - Rüzgar	GCS	Uniform	0,069	1.000	Length		0,000
LF1460	B1780	Wind	Y	0,069	0.000	Rela	From start	0,000
	Wy - Rüzgar	GCS	Uniform	0,069	1.000	Length		0,000
LF1461	B1783	Wind	X	0,069	0.000	Rela	From start	0,000
	Wx - Rüzgar	GCS	Uniform	0,069	1.000	Length		0,000
LF1462	B1794	Wind	Y	0,048	0.000	Rela	From start	0,000
	Wy - Rüzgar	GCS	Uniform	0,048	1.000	Length		0,000
LF1463	B1795	Wind	Y	0,048	0.000	Rela	From start	0,000
	Wy - Rüzgar	GCS	Uniform	0,048	1.000	Length		0,000
LF1464	B1796	Wind	Y	0,048	0.000	Rela	From start	0,000
	Wy - Rüzgar	GCS	Uniform	0,048	1.000	Length		0,000
LF1465	B1797	Wind	Y	0,048	0.000	Rela	From start	0,000
	Wy - Rüzgar	GCS	Uniform	0,048	1.000	Length		0,000
LF1466	B1798	Wind	Y	0,048	0.000	Rela	From start	0,000
	Wy - Rüzgar	GCS	Uniform	0,048	1.000	Length		0,000
LF1467	B1799	Wind	Y	0,048	0.000	Rela	From start	0,000
	Wy - Rüzgar	GCS	Uniform	0,048	1.000	Length		0,000
LF1468	B1800	Wind	Y	0,048	0.000	Rela	From start	0,000
	Wy - Rüzgar	GCS	Uniform	0,048	1.000	Length		0,000
LF1469	B1801	Wind	Y	0,048	0.000	Rela	From start	0,000
	Wy - Rüzgar	GCS	Uniform	0,048	1.000	Length		0,000
LF1470	B1802	Wind	Y	0,048	0.000	Rela	From start	0,000
	Wy - Rüzgar	GCS	Uniform	0,048	1.000	Length		0,000
LF1471	B1803	Wind	Y	0,048	0.000	Rela	From start	0,000
	Wy - Rüzgar	GCS	Uniform	0,048	1.000	Length		0,000
LF1472	B1804	Wind	Y	0,048	0.000	Rela	From start	0,000
	Wy - Rüzgar	GCS	Uniform	0,048	1.000	Length		0,000
LF1473	B1805	Wind	Y	0,048	0.000	Rela	From start	0,000
	Wy - Rüzgar	GCS	Uniform	0,048	1.000	Length		0,000
LF1474	B1806	Wind	Y	0,048	0.000	Rela	From start	0,000
	Wy - Rüzgar	GCS	Uniform	0,048	1.000	Length		0,000
LF1475	B1807	Wind	Y	0,048	0.000	Rela	From start	0,000
	Wy - Rüzgar	GCS	Uniform	0,048	1.000	Length		0,000
LF1476	B1808	Wind	Y	0,048	0.000	Rela	From start	0,000
	Wy - Rüzgar	GCS	Uniform	0,048	1.000	Length		0,000
LF1477	B1809	Wind	Y	0,048	0.000	Rela	From start	0,000
	Wy - Rüzgar	GCS	Uniform	0,048	1.000	Length		0,000
LF1478	B1810	Wind	Y	0,048	0.000	Rela	From start	0,000
	Wy - Rüzgar	GCS	Uniform	0,048	1.000	Length		0,000
LF1479	B1811	Wind	Y	0,048	0.000	Rela	From start	0,000
	Wy - Rüzgar	GCS	Uniform	0,048	1.000	Length		0,000
LF1480	B1812	Wind	Y	0,048	0.000	Rela	From start	0,000
	Wy - Rüzgar	GCS	Uniform	0,048	1.000	Length		0,000
LF1481	B1813	Wind	Y	0,048	0.000	Rela	From start	0,000
	Wy - Rüzgar	GCS	Uniform	0,048	1.000	Length		0,000
LF1482	PL462	Wind	Y	0,429	0.000	Rela	From start	0,000
	Wy - Rüzgar	GCS	Uniform	0,429	1.000	Length		0,000
LF1483	PL464	Wind	Y	0,429	0.000	Rela	From start	0,000
	Wy - Rüzgar	GCS	Uniform	0,429	1.000	Length		0,000
LF1484	PL466	Wind	Y	0,429	0.000	Rela	From start	0,000
	Wy - Rüzgar	GCS	Uniform	0,429	1.000	Length		0,000
LF1485	PL468	Wind	Y	0,429	0.000	Rela	From start	0,000
	Wy - Rüzgar	GCS	Uniform	0,429	1.000	Length		0,000
LF1486	PL470	Wind	Y	0,429	0.000	Rela	From start	0,000
	Wy - Rüzgar	GCS	Uniform	0,429	1.000	Length		0,000
LF1487	PL472	Wind	Y	0,429	0.000	Rela	From start	0,000
	Wy - Rüzgar	GCS	Uniform	0,429	1.000	Length		0,000

Name	Member Load case	Type System	Dir Distribution	Value - P_1 [kN/m] Value - P_2 [kN/m]	Pos x_1 Pos x_2	Coor Loc	Orig	Ecc ey Ecc ez
LF1488	PL474	Wind	Y	0,429	0.000	Rela	From start	0,000
	Wy - Rüzgar	GCS	Uniform	0,429	1.000	Length		0,000
LF1489	PL476	Wind	Y	0,429	0.000	Rela	From start	0,000
	Wy - Rüzgar	GCS	Uniform	0,429	1.000	Length		0,000
LF1490	PL478	Wind	Y	0,429	0.000	Rela	From start	0,000
	Wy - Rüzgar	GCS	Uniform	0,429	1.000	Length		0,000
LF1491	PL480	Wind	Y	0,429	0.000	Rela	From start	0,000
	Wy - Rüzgar	GCS	Uniform	0,429	1.000	Length		0,000
LF1492	CP218	Wind	Y	0,054	0.000	Rela	From start	0,000
	Wy - Rüzgar	GCS	Uniform	0,054	1.000	Length		0,000
LF1493	CP219	Wind	Y	0,054	0.000	Rela	From start	0,000
	Wy - Rüzgar	GCS	Uniform	0,054	1.000	Length		0,000
LF1494	CP220	Wind	Y	0,054	0.000	Rela	From start	0,000
	Wy - Rüzgar	GCS	Uniform	0,054	1.000	Length		0,000
LF1495	CP221	Wind	Y	0,054	0.000	Rela	From start	0,000
	Wy - Rüzgar	GCS	Uniform	0,054	1.000	Length		0,000
LF1496	CP222	Wind	Y	0,054	0.000	Rela	From start	0,000
	Wy - Rüzgar	GCS	Uniform	0,054	1.000	Length		0,000
LF1497	CP223	Wind	Y	0,054	0.000	Rela	From start	0,000
	Wy - Rüzgar	GCS	Uniform	0,054	1.000	Length		0,000
LF1498	B1814	Wind	Y	0,069	0.000	Rela	From start	0,000
	Wy - Rüzgar	GCS	Uniform	0,069	1.000	Length		0,000
LF1499	B1814	Wind	X	0,069	0.000	Rela	From start	0,000
	Wx - Rüzgar	GCS	Uniform	0,069	1.000	Length		0,000
LF1500	B1815	Wind	X	0,069	0.000	Rela	From start	0,000
	Wx - Rüzgar	GCS	Uniform	0,069	1.000	Length		0,000
LF1501	B1816	Wind	Y	0,069	0.000	Rela	From start	0,000
	Wy - Rüzgar	GCS	Uniform	0,069	1.000	Length		0,000
LF1502	B1818	Wind	Y	0,069	0.000	Rela	From start	0,000
	Wy - Rüzgar	GCS	Uniform	0,069	1.000	Length		0,000
LF1503	B1820	Wind	Y	0,069	0.000	Rela	From start	0,000
	Wy - Rüzgar	GCS	Uniform	0,069	1.000	Length		0,000
LF1504	B1822	Wind	Y	0,069	0.000	Rela	From start	0,000
	Wy - Rüzgar	GCS	Uniform	0,069	1.000	Length		0,000
LF1505	B1824	Wind	Y	0,069	0.000	Rela	From start	0,000
	Wy - Rüzgar	GCS	Uniform	0,069	1.000	Length		0,000
LF1506	B1826	Wind	Y	0,069	0.000	Rela	From start	0,000
	Wy - Rüzgar	GCS	Uniform	0,069	1.000	Length		0,000
LF1507	B1828	Wind	Y	0,069	0.000	Rela	From start	0,000
	Wy - Rüzgar	GCS	Uniform	0,069	1.000	Length		0,000
LF1508	B1830	Wind	X	0,057	0.000	Rela	From start	0,000
	Wx - Rüzgar	GCS	Uniform	0,057	1.000	Length		0,000
LF1509	B1838	Wind	Y	0,069	0.000	Rela	From start	0,000
	Wy - Rüzgar	GCS	Uniform	0,069	1.000	Length		0,000
LF1510	B1841	Wind	Y	0,069	0.000	Rela	From start	0,000
	Wy - Rüzgar	GCS	Uniform	0,069	1.000	Length		0,000
LF1511	B1844	Wind	Y	0,069	0.000	Rela	From start	0,000
	Wy - Rüzgar	GCS	Uniform	0,069	1.000	Length		0,000
LF1512	B1847	Wind	X	0,069	0.000	Rela	From start	0,000
	Wx - Rüzgar	GCS	Uniform	0,069	1.000	Length		0,000
LF1513	B1858	Wind	Y	0,048	0.000	Rela	From start	0,000
	Wy - Rüzgar	GCS	Uniform	0,048	1.000	Length		0,000
LF1514	B1859	Wind	Y	0,048	0.000	Rela	From start	0,000
	Wy - Rüzgar	GCS	Uniform	0,048	1.000	Length		0,000
LF1515	B1860	Wind	Y	0,048	0.000	Rela	From start	0,000
	Wy - Rüzgar	GCS	Uniform	0,048	1.000	Length		0,000
LF1516	B1861	Wind	Y	0,048	0.000	Rela	From start	0,000
	Wy - Rüzgar	GCS	Uniform	0,048	1.000	Length		0,000
LF1517	B1862	Wind	Y	0,048	0.000	Rela	From start	0,000
	Wy - Rüzgar	GCS	Uniform	0,048	1.000	Length		0,000
LF1518	B1863	Wind	Y	0,048	0.000	Rela	From start	0,000
	Wy - Rüzgar	GCS	Uniform	0,048	1.000	Length		0,000
LF1519	B1864	Wind	Y	0,048	0.000	Rela	From start	0,000
	Wy - Rüzgar	GCS	Uniform	0,048	1.000	Length		0,000
LF1520	B1865	Wind	Y	0,048	0.000	Rela	From start	0,000
	Wy - Rüzgar	GCS	Uniform	0,048	1.000	Length		0,000
LF1521	B1866	Wind	Y	0,048	0.000	Rela	From start	0,000
	Wy - Rüzgar	GCS	Uniform	0,048	1.000	Length		0,000
LF1522	B1867	Wind	Y	0,048	0.000	Rela	From start	0,000
	Wy - Rüzgar	GCS	Uniform	0,048	1.000	Length		0,000
LF1523	B1868	Wind	Y	0,048	0.000	Rela	From start	0,000
	Wy - Rüzgar	GCS	Uniform	0,048	1.000	Length		0,000
LF1524	B1869	Wind	Y	0,048	0.000	Rela	From start	0,000
	Wy - Rüzgar	GCS	Uniform	0,048	1.000	Length		0,000

Name	Member Load case	Type System	Dir Distribution	Value - P_1 [kN/m] Value - P_2 [kN/m]	Pos x_1 Pos x_2	Coor Loc	Orig	Ecc ey Ecc ez
LF1525	B1870	Wind	Y	0,048	0.000	Rela	From start	0,000
	Wy - Rüzgar	GCS	Uniform	0,048	1.000	Length		0,000
LF1526	B1871	Wind	Y	0,048	0.000	Rela	From start	0,000
	Wy - Rüzgar	GCS	Uniform	0,048	1.000	Length		0,000
LF1527	B1872	Wind	Y	0,048	0.000	Rela	From start	0,000
	Wy - Rüzgar	GCS	Uniform	0,048	1.000	Length		0,000
LF1528	B1873	Wind	Y	0,048	0.000	Rela	From start	0,000
	Wy - Rüzgar	GCS	Uniform	0,048	1.000	Length		0,000
LF1529	B1874	Wind	Y	0,048	0.000	Rela	From start	0,000
	Wy - Rüzgar	GCS	Uniform	0,048	1.000	Length		0,000
LF1530	B1875	Wind	Y	0,048	0.000	Rela	From start	0,000
	Wy - Rüzgar	GCS	Uniform	0,048	1.000	Length		0,000
LF1531	B1876	Wind	Y	0,048	0.000	Rela	From start	0,000
	Wy - Rüzgar	GCS	Uniform	0,048	1.000	Length		0,000
LF1532	B1877	Wind	Y	0,048	0.000	Rela	From start	0,000
	Wy - Rüzgar	GCS	Uniform	0,048	1.000	Length		0,000
LF1533	PL482	Wind	Y	0,429	0.000	Rela	From start	0,000
	Wy - Rüzgar	GCS	Uniform	0,429	1.000	Length		0,000
LF1534	PL484	Wind	Y	0,429	0.000	Rela	From start	0,000
	Wy - Rüzgar	GCS	Uniform	0,429	1.000	Length		0,000
LF1535	PL486	Wind	Y	0,429	0.000	Rela	From start	0,000
	Wy - Rüzgar	GCS	Uniform	0,429	1.000	Length		0,000
LF1536	PL488	Wind	Y	0,429	0.000	Rela	From start	0,000
	Wy - Rüzgar	GCS	Uniform	0,429	1.000	Length		0,000
LF1537	PL490	Wind	Y	0,429	0.000	Rela	From start	0,000
	Wy - Rüzgar	GCS	Uniform	0,429	1.000	Length		0,000
LF1538	PL492	Wind	Y	0,429	0.000	Rela	From start	0,000
	Wy - Rüzgar	GCS	Uniform	0,429	1.000	Length		0,000
LF1539	PL494	Wind	Y	0,429	0.000	Rela	From start	0,000
	Wy - Rüzgar	GCS	Uniform	0,429	1.000	Length		0,000
LF1540	PL496	Wind	Y	0,429	0.000	Rela	From start	0,000
	Wy - Rüzgar	GCS	Uniform	0,429	1.000	Length		0,000
LF1541	PL498	Wind	Y	0,429	0.000	Rela	From start	0,000
	Wy - Rüzgar	GCS	Uniform	0,429	1.000	Length		0,000
LF1542	PL500	Wind	Y	0,429	0.000	Rela	From start	0,000
	Wy - Rüzgar	GCS	Uniform	0,429	1.000	Length		0,000
LF1543	CP224	Wind	Y	0,054	0.000	Rela	From start	0,000
	Wy - Rüzgar	GCS	Uniform	0,054	1.000	Length		0,000
LF1544	CP225	Wind	Y	0,054	0.000	Rela	From start	0,000
	Wy - Rüzgar	GCS	Uniform	0,054	1.000	Length		0,000
LF1545	CP226	Wind	Y	0,054	0.000	Rela	From start	0,000
	Wy - Rüzgar	GCS	Uniform	0,054	1.000	Length		0,000
LF1546	CP227	Wind	Y	0,054	0.000	Rela	From start	0,000
	Wy - Rüzgar	GCS	Uniform	0,054	1.000	Length		0,000
LF1547	CP228	Wind	Y	0,054	0.000	Rela	From start	0,000
	Wy - Rüzgar	GCS	Uniform	0,054	1.000	Length		0,000
LF1548	CP229	Wind	Y	0,054	0.000	Rela	From start	0,000
	Wy - Rüzgar	GCS	Uniform	0,054	1.000	Length		0,000
LF1549	B1878	Wind	Y	0,069	0.000	Rela	From start	0,000
	Wy - Rüzgar	GCS	Uniform	0,069	1.000	Length		0,000
LF1550	B1878	Wind	X	0,069	0.000	Rela	From start	0,000
	Wx - Rüzgar	GCS	Uniform	0,069	1.000	Length		0,000
LF1551	B1879	Wind	X	0,069	0.000	Rela	From start	0,000
	Wx - Rüzgar	GCS	Uniform	0,069	1.000	Length		0,000
LF1552	B1880	Wind	Y	0,069	0.000	Rela	From start	0,000
	Wy - Rüzgar	GCS	Uniform	0,069	1.000	Length		0,000
LF1553	B1882	Wind	Y	0,069	0.000	Rela	From start	0,000
	Wy - Rüzgar	GCS	Uniform	0,069	1.000	Length		0,000
LF1554	B1884	Wind	Y	0,069	0.000	Rela	From start	0,000
	Wy - Rüzgar	GCS	Uniform	0,069	1.000	Length		0,000
LF1555	B1886	Wind	Y	0,069	0.000	Rela	From start	0,000
	Wy - Rüzgar	GCS	Uniform	0,069	1.000	Length		0,000
LF1556	B1888	Wind	Y	0,069	0.000	Rela	From start	0,000
	Wy - Rüzgar	GCS	Uniform	0,069	1.000	Length		0,000
LF1557	B1890	Wind	Y	0,069	0.000	Rela	From start	0,000
	Wy - Rüzgar	GCS	Uniform	0,069	1.000	Length		0,000
LF1558	B1892	Wind	Y	0,069	0.000	Rela	From start	0,000
	Wy - Rüzgar	GCS	Uniform	0,069	1.000	Length		0,000
LF1559	B1894	Wind	X	0,057	0.000	Rela	From start	0,000
	Wx - Rüzgar	GCS	Uniform	0,057	1.000	Length		0,000
LF1560	B1902	Wind	Y	0,069	0.000	Rela	From start	0,000
	Wy - Rüzgar	GCS	Uniform	0,069	1.000	Length		0,000
LF1561	B1905	Wind	Y	0,069	0.000	Rela	From start	0,000
	Wy - Rüzgar	GCS	Uniform	0,069	1.000	Length		0,000

Name	Member Load case	Type System	Dir Distribution	Value - P_1 [kN/m] Value - P_2 [kN/m]	Pos x_1 Pos x_2	Coor Loc	Orig	Ecc ey Ecc ez
LF1562	B1908	Wind	Y	0,069	0.000	Rela	From start	0,000
	Wy - Rüzgar	GCS	Uniform	0,069	1.000	Length		0,000
LF1563	B1911	Wind	X	0,069	0.000	Rela	From start	0,000
	Wx - Rüzgar	GCS	Uniform	0,069	1.000	Length		0,000
LF1564	B1922	Wind	Y	0,048	0.000	Rela	From start	0,000
	Wy - Rüzgar	GCS	Uniform	0,048	1.000	Length		0,000
LF1565	B1923	Wind	Y	0,048	0.000	Rela	From start	0,000
	Wy - Rüzgar	GCS	Uniform	0,048	1.000	Length		0,000
LF1566	B1924	Wind	Y	0,048	0.000	Rela	From start	0,000
	Wy - Rüzgar	GCS	Uniform	0,048	1.000	Length		0,000
LF1567	B1925	Wind	Y	0,048	0.000	Rela	From start	0,000
	Wy - Rüzgar	GCS	Uniform	0,048	1.000	Length		0,000
LF1568	B1926	Wind	Y	0,048	0.000	Rela	From start	0,000
	Wy - Rüzgar	GCS	Uniform	0,048	1.000	Length		0,000
LF1569	B1927	Wind	Y	0,048	0.000	Rela	From start	0,000
	Wy - Rüzgar	GCS	Uniform	0,048	1.000	Length		0,000
LF1570	B1928	Wind	Y	0,048	0.000	Rela	From start	0,000
	Wy - Rüzgar	GCS	Uniform	0,048	1.000	Length		0,000
LF1571	B1929	Wind	Y	0,048	0.000	Rela	From start	0,000
	Wy - Rüzgar	GCS	Uniform	0,048	1.000	Length		0,000
LF1572	B1930	Wind	Y	0,048	0.000	Rela	From start	0,000
	Wy - Rüzgar	GCS	Uniform	0,048	1.000	Length		0,000
LF1573	B1931	Wind	Y	0,048	0.000	Rela	From start	0,000
	Wy - Rüzgar	GCS	Uniform	0,048	1.000	Length		0,000
LF1574	B1932	Wind	Y	0,048	0.000	Rela	From start	0,000
	Wy - Rüzgar	GCS	Uniform	0,048	1.000	Length		0,000
LF1575	B1933	Wind	Y	0,048	0.000	Rela	From start	0,000
	Wy - Rüzgar	GCS	Uniform	0,048	1.000	Length		0,000
LF1576	B1934	Wind	Y	0,048	0.000	Rela	From start	0,000
	Wy - Rüzgar	GCS	Uniform	0,048	1.000	Length		0,000
LF1577	B1935	Wind	Y	0,048	0.000	Rela	From start	0,000
	Wy - Rüzgar	GCS	Uniform	0,048	1.000	Length		0,000
LF1578	B1936	Wind	Y	0,048	0.000	Rela	From start	0,000
	Wy - Rüzgar	GCS	Uniform	0,048	1.000	Length		0,000
LF1579	B1937	Wind	Y	0,048	0.000	Rela	From start	0,000
	Wy - Rüzgar	GCS	Uniform	0,048	1.000	Length		0,000
LF1580	B1938	Wind	Y	0,048	0.000	Rela	From start	0,000
	Wy - Rüzgar	GCS	Uniform	0,048	1.000	Length		0,000
LF1581	B1939	Wind	Y	0,048	0.000	Rela	From start	0,000
	Wy - Rüzgar	GCS	Uniform	0,048	1.000	Length		0,000
LF1582	B1940	Wind	Y	0,048	0.000	Rela	From start	0,000
	Wy - Rüzgar	GCS	Uniform	0,048	1.000	Length		0,000
LF1583	B1941	Wind	Y	0,048	0.000	Rela	From start	0,000
	Wy - Rüzgar	GCS	Uniform	0,048	1.000	Length		0,000
LF1584	PL502	Wind	Y	0,429	0.000	Rela	From start	0,000
	Wy - Rüzgar	GCS	Uniform	0,429	1.000	Length		0,000
LF1585	PL504	Wind	Y	0,429	0.000	Rela	From start	0,000
	Wy - Rüzgar	GCS	Uniform	0,429	1.000	Length		0,000
LF1586	PL506	Wind	Y	0,429	0.000	Rela	From start	0,000
	Wy - Rüzgar	GCS	Uniform	0,429	1.000	Length		0,000
LF1587	PL508	Wind	Y	0,429	0.000	Rela	From start	0,000
	Wy - Rüzgar	GCS	Uniform	0,429	1.000	Length		0,000
LF1588	PL510	Wind	Y	0,429	0.000	Rela	From start	0,000
	Wy - Rüzgar	GCS	Uniform	0,429	1.000	Length		0,000
LF1589	PL512	Wind	Y	0,429	0.000	Rela	From start	0,000
	Wy - Rüzgar	GCS	Uniform	0,429	1.000	Length		0,000
LF1590	PL514	Wind	Y	0,429	0.000	Rela	From start	0,000
	Wy - Rüzgar	GCS	Uniform	0,429	1.000	Length		0,000
LF1591	PL516	Wind	Y	0,429	0.000	Rela	From start	0,000
	Wy - Rüzgar	GCS	Uniform	0,429	1.000	Length		0,000
LF1592	PL518	Wind	Y	0,429	0.000	Rela	From start	0,000
	Wy - Rüzgar	GCS	Uniform	0,429	1.000	Length		0,000
LF1593	PL520	Wind	Y	0,429	0.000	Rela	From start	0,000
	Wy - Rüzgar	GCS	Uniform	0,429	1.000	Length		0,000
LF1594	CP230	Wind	Y	0,054	0.000	Rela	From start	0,000
	Wy - Rüzgar	GCS	Uniform	0,054	1.000	Length		0,000
LF1595	CP231	Wind	Y	0,054	0.000	Rela	From start	0,000
	Wy - Rüzgar	GCS	Uniform	0,054	1.000	Length		0,000
LF1596	CP232	Wind	Y	0,054	0.000	Rela	From start	0,000
	Wy - Rüzgar	GCS	Uniform	0,054	1.000	Length		0,000
LF1597	CP233	Wind	Y	0,054	0.000	Rela	From start	0,000
	Wy - Rüzgar	GCS	Uniform	0,054	1.000	Length		0,000
LF1598	CP234	Wind	Y	0,054	0.000	Rela	From start	0,000
	Wy - Rüzgar	GCS	Uniform	0,054	1.000	Length		0,000

Name	Member Load case	Type System	Dir Distribution	Value - P_1 [kN/m] Value - P_2 [kN/m]	Pos x_1 Pos x_2	Coor Loc	Orig	Ecc ey Ecc ez
LF1599	CP235	Wind	Y	0,054	0.000	Rela	From start	0,000
	Wy - Rüzgar	GCS	Uniform	0,054	1.000	Length		0,000
LF1600	B1942	Wind	Y	0,069	0.000	Rela	From start	0,000
	Wy - Rüzgar	GCS	Uniform	0,069	1.000	Length		0,000
LF1601	B1942	Wind	X	0,069	0.000	Rela	From start	0,000
	Wx - Rüzgar	GCS	Uniform	0,069	1.000	Length		0,000
LF1602	B1943	Wind	X	0,069	0.000	Rela	From start	0,000
	Wx - Rüzgar	GCS	Uniform	0,069	1.000	Length		0,000
LF1603	B1944	Wind	Y	0,069	0.000	Rela	From start	0,000
	Wy - Rüzgar	GCS	Uniform	0,069	1.000	Length		0,000
LF1604	B1946	Wind	Y	0,069	0.000	Rela	From start	0,000
	Wy - Rüzgar	GCS	Uniform	0,069	1.000	Length		0,000
LF1605	B1948	Wind	Y	0,069	0.000	Rela	From start	0,000
	Wy - Rüzgar	GCS	Uniform	0,069	1.000	Length		0,000
LF1606	B1950	Wind	Y	0,069	0.000	Rela	From start	0,000
	Wy - Rüzgar	GCS	Uniform	0,069	1.000	Length		0,000
LF1607	B1952	Wind	Y	0,069	0.000	Rela	From start	0,000
	Wy - Rüzgar	GCS	Uniform	0,069	1.000	Length		0,000
LF1608	B1954	Wind	Y	0,069	0.000	Rela	From start	0,000
	Wy - Rüzgar	GCS	Uniform	0,069	1.000	Length		0,000
LF1609	B1956	Wind	Y	0,069	0.000	Rela	From start	0,000
	Wy - Rüzgar	GCS	Uniform	0,069	1.000	Length		0,000
LF1610	B1958	Wind	X	0,057	0.000	Rela	From start	0,000
	Wx - Rüzgar	GCS	Uniform	0,057	1.000	Length		0,000
LF1611	B1966	Wind	Y	0,069	0.000	Rela	From start	0,000
	Wy - Rüzgar	GCS	Uniform	0,069	1.000	Length		0,000
LF1612	B1969	Wind	Y	0,069	0.000	Rela	From start	0,000
	Wy - Rüzgar	GCS	Uniform	0,069	1.000	Length		0,000
LF1613	B1972	Wind	Y	0,069	0.000	Rela	From start	0,000
	Wy - Rüzgar	GCS	Uniform	0,069	1.000	Length		0,000
LF1614	B1975	Wind	X	0,069	0.000	Rela	From start	0,000
	Wx - Rüzgar	GCS	Uniform	0,069	1.000	Length		0,000
LF1615	B1986	Wind	Y	0,048	0.000	Rela	From start	0,000
	Wy - Rüzgar	GCS	Uniform	0,048	1.000	Length		0,000
LF1616	B1987	Wind	Y	0,048	0.000	Rela	From start	0,000
	Wy - Rüzgar	GCS	Uniform	0,048	1.000	Length		0,000
LF1617	B1988	Wind	Y	0,048	0.000	Rela	From start	0,000
	Wy - Rüzgar	GCS	Uniform	0,048	1.000	Length		0,000
LF1618	B1989	Wind	Y	0,048	0.000	Rela	From start	0,000
	Wy - Rüzgar	GCS	Uniform	0,048	1.000	Length		0,000
LF1619	B1990	Wind	Y	0,048	0.000	Rela	From start	0,000
	Wy - Rüzgar	GCS	Uniform	0,048	1.000	Length		0,000
LF1620	B1991	Wind	Y	0,048	0.000	Rela	From start	0,000
	Wy - Rüzgar	GCS	Uniform	0,048	1.000	Length		0,000
LF1621	B1992	Wind	Y	0,048	0.000	Rela	From start	0,000
	Wy - Rüzgar	GCS	Uniform	0,048	1.000	Length		0,000
LF1622	B1993	Wind	Y	0,048	0.000	Rela	From start	0,000
	Wy - Rüzgar	GCS	Uniform	0,048	1.000	Length		0,000
LF1623	B1994	Wind	Y	0,048	0.000	Rela	From start	0,000
	Wy - Rüzgar	GCS	Uniform	0,048	1.000	Length		0,000
LF1624	B1995	Wind	Y	0,048	0.000	Rela	From start	0,000
	Wy - Rüzgar	GCS	Uniform	0,048	1.000	Length		0,000
LF1625	B1996	Wind	Y	0,048	0.000	Rela	From start	0,000
	Wy - Rüzgar	GCS	Uniform	0,048	1.000	Length		0,000
LF1626	B1997	Wind	Y	0,048	0.000	Rela	From start	0,000
	Wy - Rüzgar	GCS	Uniform	0,048	1.000	Length		0,000
LF1627	B1998	Wind	Y	0,048	0.000	Rela	From start	0,000
	Wy - Rüzgar	GCS	Uniform	0,048	1.000	Length		0,000
LF1628	B1999	Wind	Y	0,048	0.000	Rela	From start	0,000
	Wy - Rüzgar	GCS	Uniform	0,048	1.000	Length		0,000
LF1629	B2000	Wind	Y	0,048	0.000	Rela	From start	0,000
	Wy - Rüzgar	GCS	Uniform	0,048	1.000	Length		0,000
LF1630	B2001	Wind	Y	0,048	0.000	Rela	From start	0,000
	Wy - Rüzgar	GCS	Uniform	0,048	1.000	Length		0,000
LF1631	B2002	Wind	Y	0,048	0.000	Rela	From start	0,000
	Wy - Rüzgar	GCS	Uniform	0,048	1.000	Length		0,000
LF1632	B2003	Wind	Y	0,048	0.000	Rela	From start	0,000
	Wy - Rüzgar	GCS	Uniform	0,048	1.000	Length		0,000
LF1633	B2004	Wind	Y	0,048	0.000	Rela	From start	0,000
	Wy - Rüzgar	GCS	Uniform	0,048	1.000	Length		0,000
LF1634	B2005	Wind	Y	0,048	0.000	Rela	From start	0,000
	Wy - Rüzgar	GCS	Uniform	0,048	1.000	Length		0,000
LF1635	PL522	Wind	Y	0,429	0.000	Rela	From start	0,000
	Wy - Rüzgar	GCS	Uniform	0,429	1.000	Length		0,000

Name	Member Load case	Type System	Dir Distribution	Value - P_1 [kN/m] Value - P_2 [kN/m]	Pos x_1 Pos x_2	Coor Loc	Orig	Ecc ey Ecc ez
LF1636	PL524	Wind	Y	0,429	0.000	Rela	From start	0,000
	Wy - Rüzgar	GCS	Uniform	0,429	1.000	Length		0,000
LF1637	PL526	Wind	Y	0,429	0.000	Rela	From start	0,000
	Wy - Rüzgar	GCS	Uniform	0,429	1.000	Length		0,000
LF1638	PL528	Wind	Y	0,429	0.000	Rela	From start	0,000
	Wy - Rüzgar	GCS	Uniform	0,429	1.000	Length		0,000
LF1639	PL530	Wind	Y	0,429	0.000	Rela	From start	0,000
	Wy - Rüzgar	GCS	Uniform	0,429	1.000	Length		0,000
LF1640	PL532	Wind	Y	0,429	0.000	Rela	From start	0,000
	Wy - Rüzgar	GCS	Uniform	0,429	1.000	Length		0,000
LF1641	PL534	Wind	Y	0,429	0.000	Rela	From start	0,000
	Wy - Rüzgar	GCS	Uniform	0,429	1.000	Length		0,000
LF1642	PL536	Wind	Y	0,429	0.000	Rela	From start	0,000
	Wy - Rüzgar	GCS	Uniform	0,429	1.000	Length		0,000
LF1643	PL538	Wind	Y	0,429	0.000	Rela	From start	0,000
	Wy - Rüzgar	GCS	Uniform	0,429	1.000	Length		0,000
LF1644	PL540	Wind	Y	0,429	0.000	Rela	From start	0,000
	Wy - Rüzgar	GCS	Uniform	0,429	1.000	Length		0,000
LF1645	CP236	Wind	Y	0,054	0.000	Rela	From start	0,000
	Wy - Rüzgar	GCS	Uniform	0,054	1.000	Length		0,000
LF1646	CP237	Wind	Y	0,054	0.000	Rela	From start	0,000
	Wy - Rüzgar	GCS	Uniform	0,054	1.000	Length		0,000
LF1647	CP238	Wind	Y	0,054	0.000	Rela	From start	0,000
	Wy - Rüzgar	GCS	Uniform	0,054	1.000	Length		0,000
LF1648	CP239	Wind	Y	0,054	0.000	Rela	From start	0,000
	Wy - Rüzgar	GCS	Uniform	0,054	1.000	Length		0,000
LF1649	CP240	Wind	Y	0,054	0.000	Rela	From start	0,000
	Wy - Rüzgar	GCS	Uniform	0,054	1.000	Length		0,000
LF1650	CP241	Wind	Y	0,054	0.000	Rela	From start	0,000
	Wy - Rüzgar	GCS	Uniform	0,054	1.000	Length		0,000
LF1651	B2006	Wind	Y	0,069	0.000	Rela	From start	0,000
	Wy - Rüzgar	GCS	Uniform	0,069	1.000	Length		0,000
LF1652	B2006	Wind	X	0,069	0.000	Rela	From start	0,000
	Wx - Rüzgar	GCS	Uniform	0,069	1.000	Length		0,000
LF1653	B2007	Wind	X	0,069	0.000	Rela	From start	0,000
	Wx - Rüzgar	GCS	Uniform	0,069	1.000	Length		0,000
LF1654	B2008	Wind	Y	0,069	0.000	Rela	From start	0,000
	Wy - Rüzgar	GCS	Uniform	0,069	1.000	Length		0,000
LF1655	B2010	Wind	Y	0,069	0.000	Rela	From start	0,000
	Wy - Rüzgar	GCS	Uniform	0,069	1.000	Length		0,000
LF1656	B2012	Wind	Y	0,069	0.000	Rela	From start	0,000
	Wy - Rüzgar	GCS	Uniform	0,069	1.000	Length		0,000
LF1657	B2014	Wind	Y	0,069	0.000	Rela	From start	0,000
	Wy - Rüzgar	GCS	Uniform	0,069	1.000	Length		0,000
LF1658	B2016	Wind	Y	0,069	0.000	Rela	From start	0,000
	Wy - Rüzgar	GCS	Uniform	0,069	1.000	Length		0,000
LF1659	B2018	Wind	Y	0,069	0.000	Rela	From start	0,000
	Wy - Rüzgar	GCS	Uniform	0,069	1.000	Length		0,000
LF1660	B2020	Wind	Y	0,069	0.000	Rela	From start	0,000
	Wy - Rüzgar	GCS	Uniform	0,069	1.000	Length		0,000
LF1661	B2022	Wind	X	0,057	0.000	Rela	From start	0,000
	Wx - Rüzgar	GCS	Uniform	0,057	1.000	Length		0,000
LF1662	B2030	Wind	Y	0,069	0.000	Rela	From start	0,000
	Wy - Rüzgar	GCS	Uniform	0,069	1.000	Length		0,000
LF1663	B2033	Wind	Y	0,069	0.000	Rela	From start	0,000
	Wy - Rüzgar	GCS	Uniform	0,069	1.000	Length		0,000
LF1664	B2036	Wind	Y	0,069	0.000	Rela	From start	0,000
	Wy - Rüzgar	GCS	Uniform	0,069	1.000	Length		0,000
LF1665	B2039	Wind	X	0,069	0.000	Rela	From start	0,000
	Wx - Rüzgar	GCS	Uniform	0,069	1.000	Length		0,000
LF1666	B2050	Wind	Y	0,048	0.000	Rela	From start	0,000
	Wy - Rüzgar	GCS	Uniform	0,048	1.000	Length		0,000
LF1667	B2051	Wind	Y	0,048	0.000	Rela	From start	0,000
	Wy - Rüzgar	GCS	Uniform	0,048	1.000	Length		0,000
LF1668	B2052	Wind	Y	0,048	0.000	Rela	From start	0,000
	Wy - Rüzgar	GCS	Uniform	0,048	1.000	Length		0,000
LF1669	B2053	Wind	Y	0,048	0.000	Rela	From start	0,000
	Wy - Rüzgar	GCS	Uniform	0,048	1.000	Length		0,000
LF1670	B2054	Wind	Y	0,048	0.000	Rela	From start	0,000
	Wy - Rüzgar	GCS	Uniform	0,048	1.000	Length		0,000
LF1671	B2055	Wind	Y	0,048	0.000	Rela	From start	0,000
	Wy - Rüzgar	GCS	Uniform	0,048	1.000	Length		0,000
LF1672	B2056	Wind	Y	0,048	0.000	Rela	From start	0,000
	Wy - Rüzgar	GCS	Uniform	0,048	1.000	Length		0,000

Name	Member Load case	Type System	Dir Distribution	Value - P_1 [kN/m] Value - P_2 [kN/m]	Pos x_1 Pos x_2	Coor Loc	Orig	Ecc ey Ecc ez
LF1673	B2057	Wind	Y	0,048	0.000	Rela	From start	0,000
	Wy - Rüzgar	GCS	Uniform	0,048	1.000	Length		0,000
LF1674	B2058	Wind	Y	0,048	0.000	Rela	From start	0,000
	Wy - Rüzgar	GCS	Uniform	0,048	1.000	Length		0,000
LF1675	B2059	Wind	Y	0,048	0.000	Rela	From start	0,000
	Wy - Rüzgar	GCS	Uniform	0,048	1.000	Length		0,000
LF1676	B2060	Wind	Y	0,048	0.000	Rela	From start	0,000
	Wy - Rüzgar	GCS	Uniform	0,048	1.000	Length		0,000
LF1677	B2061	Wind	Y	0,048	0.000	Rela	From start	0,000
	Wy - Rüzgar	GCS	Uniform	0,048	1.000	Length		0,000
LF1678	B2062	Wind	Y	0,048	0.000	Rela	From start	0,000
	Wy - Rüzgar	GCS	Uniform	0,048	1.000	Length		0,000
LF1679	B2063	Wind	Y	0,048	0.000	Rela	From start	0,000
	Wy - Rüzgar	GCS	Uniform	0,048	1.000	Length		0,000
LF1680	B2064	Wind	Y	0,048	0.000	Rela	From start	0,000
	Wy - Rüzgar	GCS	Uniform	0,048	1.000	Length		0,000
LF1681	B2065	Wind	Y	0,048	0.000	Rela	From start	0,000
	Wy - Rüzgar	GCS	Uniform	0,048	1.000	Length		0,000
LF1682	B2066	Wind	Y	0,048	0.000	Rela	From start	0,000
	Wy - Rüzgar	GCS	Uniform	0,048	1.000	Length		0,000
LF1683	B2067	Wind	Y	0,048	0.000	Rela	From start	0,000
	Wy - Rüzgar	GCS	Uniform	0,048	1.000	Length		0,000
LF1684	B2068	Wind	Y	0,048	0.000	Rela	From start	0,000
	Wy - Rüzgar	GCS	Uniform	0,048	1.000	Length		0,000
LF1685	B2069	Wind	Y	0,048	0.000	Rela	From start	0,000
	Wy - Rüzgar	GCS	Uniform	0,048	1.000	Length		0,000
LF1686	PL542	Wind	Y	0,429	0.000	Rela	From start	0,000
	Wy - Rüzgar	GCS	Uniform	0,429	1.000	Length		0,000
LF1687	PL544	Wind	Y	0,429	0.000	Rela	From start	0,000
	Wy - Rüzgar	GCS	Uniform	0,429	1.000	Length		0,000
LF1688	PL546	Wind	Y	0,429	0.000	Rela	From start	0,000
	Wy - Rüzgar	GCS	Uniform	0,429	1.000	Length		0,000
LF1689	PL548	Wind	Y	0,429	0.000	Rela	From start	0,000
	Wy - Rüzgar	GCS	Uniform	0,429	1.000	Length		0,000
LF1690	PL550	Wind	Y	0,429	0.000	Rela	From start	0,000
	Wy - Rüzgar	GCS	Uniform	0,429	1.000	Length		0,000
LF1691	PL552	Wind	Y	0,429	0.000	Rela	From start	0,000
	Wy - Rüzgar	GCS	Uniform	0,429	1.000	Length		0,000
LF1692	PL554	Wind	Y	0,429	0.000	Rela	From start	0,000
	Wy - Rüzgar	GCS	Uniform	0,429	1.000	Length		0,000
LF1693	PL556	Wind	Y	0,429	0.000	Rela	From start	0,000
	Wy - Rüzgar	GCS	Uniform	0,429	1.000	Length		0,000
LF1694	PL558	Wind	Y	0,429	0.000	Rela	From start	0,000
	Wy - Rüzgar	GCS	Uniform	0,429	1.000	Length		0,000
LF1695	PL560	Wind	Y	0,429	0.000	Rela	From start	0,000
	Wy - Rüzgar	GCS	Uniform	0,429	1.000	Length		0,000
LF1696	CP242	Wind	Y	0,054	0.000	Rela	From start	0,000
	Wy - Rüzgar	GCS	Uniform	0,054	1.000	Length		0,000
LF1697	CP243	Wind	Y	0,054	0.000	Rela	From start	0,000
	Wy - Rüzgar	GCS	Uniform	0,054	1.000	Length		0,000
LF1698	CP244	Wind	Y	0,054	0.000	Rela	From start	0,000
	Wy - Rüzgar	GCS	Uniform	0,054	1.000	Length		0,000
LF1699	CP245	Wind	Y	0,054	0.000	Rela	From start	0,000
	Wy - Rüzgar	GCS	Uniform	0,054	1.000	Length		0,000
LF1700	CP246	Wind	Y	0,054	0.000	Rela	From start	0,000
	Wy - Rüzgar	GCS	Uniform	0,054	1.000	Length		0,000
LF1701	CP247	Wind	Y	0,054	0.000	Rela	From start	0,000
	Wy - Rüzgar	GCS	Uniform	0,054	1.000	Length		0,000
LF1702	B2070	Wind	Y	0,069	0.000	Rela	From start	0,000
	Wy - Rüzgar	GCS	Uniform	0,069	1.000	Length		0,000
LF1703	B2070	Wind	X	0,069	0.000	Rela	From start	0,000
	Wx - Rüzgar	GCS	Uniform	0,069	1.000	Length		0,000
LF1704	B2071	Wind	X	0,069	0.000	Rela	From start	0,000
	Wx - Rüzgar	GCS	Uniform	0,069	1.000	Length		0,000
LF1705	B2072	Wind	Y	0,069	0.000	Rela	From start	0,000
	Wy - Rüzgar	GCS	Uniform	0,069	1.000	Length		0,000
LF1706	B2074	Wind	Y	0,069	0.000	Rela	From start	0,000
	Wy - Rüzgar	GCS	Uniform	0,069	1.000	Length		0,000
LF1707	B2076	Wind	Y	0,069	0.000	Rela	From start	0,000
	Wy - Rüzgar	GCS	Uniform	0,069	1.000	Length		0,000
LF1708	B2078	Wind	Y	0,069	0.000	Rela	From start	0,000
	Wy - Rüzgar	GCS	Uniform	0,069	1.000	Length		0,000
LF1709	B2080	Wind	Y	0,069	0.000	Rela	From start	0,000
	Wy - Rüzgar	GCS	Uniform	0,069	1.000	Length		0,000

Name	Member Load case	Type System	Dir Distribution	Value - P_1 [kN/m] Value - P_2 [kN/m]	Pos x_1 Pos x_2	Coor Loc	Orig	Ecc ey Ecc ez
LF1710	B2082	Wind	Y	0,069	0.000	Rela	From start	0,000
	Wy - Rüzgar	GCS	Uniform	0,069	1.000	Length		0,000
LF1711	B2084	Wind	Y	0,069	0.000	Rela	From start	0,000
	Wy - Rüzgar	GCS	Uniform	0,069	1.000	Length		0,000
LF1712	B2086	Wind	X	0,057	0.000	Rela	From start	0,000
	Wx - Rüzgar	GCS	Uniform	0,057	1.000	Length		0,000
LF1713	B2094	Wind	Y	0,069	0.000	Rela	From start	0,000
	Wy - Rüzgar	GCS	Uniform	0,069	1.000	Length		0,000
LF1714	B2097	Wind	Y	0,069	0.000	Rela	From start	0,000
	Wy - Rüzgar	GCS	Uniform	0,069	1.000	Length		0,000
LF1715	B2100	Wind	Y	0,069	0.000	Rela	From start	0,000
	Wy - Rüzgar	GCS	Uniform	0,069	1.000	Length		0,000
LF1716	B2103	Wind	X	0,069	0.000	Rela	From start	0,000
	Wx - Rüzgar	GCS	Uniform	0,069	1.000	Length		0,000
LF1717	B2114	Wind	Y	0,048	0.000	Rela	From start	0,000
	Wy - Rüzgar	GCS	Uniform	0,048	1.000	Length		0,000
LF1718	B2115	Wind	Y	0,048	0.000	Rela	From start	0,000
	Wy - Rüzgar	GCS	Uniform	0,048	1.000	Length		0,000
LF1719	B2116	Wind	Y	0,048	0.000	Rela	From start	0,000
	Wy - Rüzgar	GCS	Uniform	0,048	1.000	Length		0,000
LF1720	B2117	Wind	Y	0,048	0.000	Rela	From start	0,000
	Wy - Rüzgar	GCS	Uniform	0,048	1.000	Length		0,000
LF1721	B2118	Wind	Y	0,048	0.000	Rela	From start	0,000
	Wy - Rüzgar	GCS	Uniform	0,048	1.000	Length		0,000
LF1722	B2119	Wind	Y	0,048	0.000	Rela	From start	0,000
	Wy - Rüzgar	GCS	Uniform	0,048	1.000	Length		0,000
LF1723	B2120	Wind	Y	0,048	0.000	Rela	From start	0,000
	Wy - Rüzgar	GCS	Uniform	0,048	1.000	Length		0,000
LF1724	B2121	Wind	Y	0,048	0.000	Rela	From start	0,000
	Wy - Rüzgar	GCS	Uniform	0,048	1.000	Length		0,000
LF1725	B2122	Wind	Y	0,048	0.000	Rela	From start	0,000
	Wy - Rüzgar	GCS	Uniform	0,048	1.000	Length		0,000
LF1726	B2123	Wind	Y	0,048	0.000	Rela	From start	0,000
	Wy - Rüzgar	GCS	Uniform	0,048	1.000	Length		0,000
LF1727	B2124	Wind	Y	0,048	0.000	Rela	From start	0,000
	Wy - Rüzgar	GCS	Uniform	0,048	1.000	Length		0,000
LF1728	B2125	Wind	Y	0,048	0.000	Rela	From start	0,000
	Wy - Rüzgar	GCS	Uniform	0,048	1.000	Length		0,000
LF1729	B2126	Wind	Y	0,048	0.000	Rela	From start	0,000
	Wy - Rüzgar	GCS	Uniform	0,048	1.000	Length		0,000
LF1730	B2127	Wind	Y	0,048	0.000	Rela	From start	0,000
	Wy - Rüzgar	GCS	Uniform	0,048	1.000	Length		0,000
LF1731	B2128	Wind	Y	0,048	0.000	Rela	From start	0,000
	Wy - Rüzgar	GCS	Uniform	0,048	1.000	Length		0,000
LF1732	B2129	Wind	Y	0,048	0.000	Rela	From start	0,000
	Wy - Rüzgar	GCS	Uniform	0,048	1.000	Length		0,000
LF1733	B2130	Wind	Y	0,048	0.000	Rela	From start	0,000
	Wy - Rüzgar	GCS	Uniform	0,048	1.000	Length		0,000
LF1734	B2131	Wind	Y	0,048	0.000	Rela	From start	0,000
	Wy - Rüzgar	GCS	Uniform	0,048	1.000	Length		0,000
LF1735	B2132	Wind	Y	0,048	0.000	Rela	From start	0,000
	Wy - Rüzgar	GCS	Uniform	0,048	1.000	Length		0,000
LF1736	B2133	Wind	Y	0,048	0.000	Rela	From start	0,000
	Wy - Rüzgar	GCS	Uniform	0,048	1.000	Length		0,000
LF1737	PL562	Wind	Y	0,429	0.000	Rela	From start	0,000
	Wy - Rüzgar	GCS	Uniform	0,429	1.000	Length		0,000
LF1738	PL564	Wind	Y	0,429	0.000	Rela	From start	0,000
	Wy - Rüzgar	GCS	Uniform	0,429	1.000	Length		0,000
LF1739	PL566	Wind	Y	0,429	0.000	Rela	From start	0,000
	Wy - Rüzgar	GCS	Uniform	0,429	1.000	Length		0,000
LF1740	PL568	Wind	Y	0,429	0.000	Rela	From start	0,000
	Wy - Rüzgar	GCS	Uniform	0,429	1.000	Length		0,000
LF1741	PL570	Wind	Y	0,429	0.000	Rela	From start	0,000
	Wy - Rüzgar	GCS	Uniform	0,429	1.000	Length		0,000
LF1742	PL572	Wind	Y	0,429	0.000	Rela	From start	0,000
	Wy - Rüzgar	GCS	Uniform	0,429	1.000	Length		0,000
LF1743	PL574	Wind	Y	0,429	0.000	Rela	From start	0,000
	Wy - Rüzgar	GCS	Uniform	0,429	1.000	Length		0,000
LF1744	PL576	Wind	Y	0,429	0.000	Rela	From start	0,000
	Wy - Rüzgar	GCS	Uniform	0,429	1.000	Length		0,000
LF1745	PL578	Wind	Y	0,429	0.000	Rela	From start	0,000
	Wy - Rüzgar	GCS	Uniform	0,429	1.000	Length		0,000
LF1746	PL580	Wind	Y	0,429	0.000	Rela	From start	0,000
	Wy - Rüzgar	GCS	Uniform	0,429	1.000	Length		0,000

Name	Member Load case	Type System	Dir Distribution	Value - P_1 [kN/m] Value - P_2 [kN/m]	Pos x_1 Pos x_2	Coor Loc	Orig	Ecc ey Ecc ez
LF1747	CP248	Wind	Y	0,054	0.000	Rela	From start	0,000
	Wy - Rüzgar	GCS	Uniform	0,054	1.000	Length		0,000
LF1748	CP249	Wind	Y	0,054	0.000	Rela	From start	0,000
	Wy - Rüzgar	GCS	Uniform	0,054	1.000	Length		0,000
LF1749	CP250	Wind	Y	0,054	0.000	Rela	From start	0,000
	Wy - Rüzgar	GCS	Uniform	0,054	1.000	Length		0,000
LF1750	CP251	Wind	Y	0,054	0.000	Rela	From start	0,000
	Wy - Rüzgar	GCS	Uniform	0,054	1.000	Length		0,000
LF1751	CP252	Wind	Y	0,054	0.000	Rela	From start	0,000
	Wy - Rüzgar	GCS	Uniform	0,054	1.000	Length		0,000
LF1752	CP253	Wind	Y	0,054	0.000	Rela	From start	0,000
	Wy - Rüzgar	GCS	Uniform	0,054	1.000	Length		0,000
LF1753	B2134	Wind	Y	0,069	0.000	Rela	From start	0,000
	Wy - Rüzgar	GCS	Uniform	0,069	1.000	Length		0,000
LF1754	B2134	Wind	X	0,069	0.000	Rela	From start	0,000
	Wx - Rüzgar	GCS	Uniform	0,069	1.000	Length		0,000
LF1755	B2135	Wind	X	0,069	0.000	Rela	From start	0,000
	Wx - Rüzgar	GCS	Uniform	0,069	1.000	Length		0,000
LF1756	B2136	Wind	Y	0,069	0.000	Rela	From start	0,000
	Wy - Rüzgar	GCS	Uniform	0,069	1.000	Length		0,000
LF1757	B2138	Wind	Y	0,069	0.000	Rela	From start	0,000
	Wy - Rüzgar	GCS	Uniform	0,069	1.000	Length		0,000
LF1758	B2140	Wind	Y	0,069	0.000	Rela	From start	0,000
	Wy - Rüzgar	GCS	Uniform	0,069	1.000	Length		0,000
LF1759	B2142	Wind	Y	0,069	0.000	Rela	From start	0,000
	Wy - Rüzgar	GCS	Uniform	0,069	1.000	Length		0,000
LF1760	B2144	Wind	Y	0,069	0.000	Rela	From start	0,000
	Wy - Rüzgar	GCS	Uniform	0,069	1.000	Length		0,000
LF1761	B2146	Wind	Y	0,069	0.000	Rela	From start	0,000
	Wy - Rüzgar	GCS	Uniform	0,069	1.000	Length		0,000
LF1762	B2148	Wind	Y	0,069	0.000	Rela	From start	0,000
	Wy - Rüzgar	GCS	Uniform	0,069	1.000	Length		0,000
LF1763	B2150	Wind	X	0,057	0.000	Rela	From start	0,000
	Wx - Rüzgar	GCS	Uniform	0,057	1.000	Length		0,000
LF1764	B2158	Wind	Y	0,069	0.000	Rela	From start	0,000
	Wy - Rüzgar	GCS	Uniform	0,069	1.000	Length		0,000
LF1765	B2161	Wind	Y	0,069	0.000	Rela	From start	0,000
	Wy - Rüzgar	GCS	Uniform	0,069	1.000	Length		0,000
LF1766	B2164	Wind	Y	0,069	0.000	Rela	From start	0,000
	Wy - Rüzgar	GCS	Uniform	0,069	1.000	Length		0,000
LF1767	B2167	Wind	X	0,069	0.000	Rela	From start	0,000
	Wx - Rüzgar	GCS	Uniform	0,069	1.000	Length		0,000
LF1768	B2178	Wind	Y	0,048	0.000	Rela	From start	0,000
	Wy - Rüzgar	GCS	Uniform	0,048	1.000	Length		0,000
LF1769	B2179	Wind	Y	0,048	0.000	Rela	From start	0,000
	Wy - Rüzgar	GCS	Uniform	0,048	1.000	Length		0,000
LF1770	B2180	Wind	Y	0,048	0.000	Rela	From start	0,000
	Wy - Rüzgar	GCS	Uniform	0,048	1.000	Length		0,000
LF1771	B2181	Wind	Y	0,048	0.000	Rela	From start	0,000
	Wy - Rüzgar	GCS	Uniform	0,048	1.000	Length		0,000
LF1772	B2182	Wind	Y	0,048	0.000	Rela	From start	0,000
	Wy - Rüzgar	GCS	Uniform	0,048	1.000	Length		0,000
LF1773	B2183	Wind	Y	0,048	0.000	Rela	From start	0,000
	Wy - Rüzgar	GCS	Uniform	0,048	1.000	Length		0,000
LF1774	B2184	Wind	Y	0,048	0.000	Rela	From start	0,000
	Wy - Rüzgar	GCS	Uniform	0,048	1.000	Length		0,000
LF1775	B2185	Wind	Y	0,048	0.000	Rela	From start	0,000
	Wy - Rüzgar	GCS	Uniform	0,048	1.000	Length		0,000
LF1776	B2186	Wind	Y	0,048	0.000	Rela	From start	0,000
	Wy - Rüzgar	GCS	Uniform	0,048	1.000	Length		0,000
LF1777	B2187	Wind	Y	0,048	0.000	Rela	From start	0,000
	Wy - Rüzgar	GCS	Uniform	0,048	1.000	Length		0,000
LF1778	B2188	Wind	Y	0,048	0.000	Rela	From start	0,000
	Wy - Rüzgar	GCS	Uniform	0,048	1.000	Length		0,000
LF1779	B2189	Wind	Y	0,048	0.000	Rela	From start	0,000
	Wy - Rüzgar	GCS	Uniform	0,048	1.000	Length		0,000
LF1780	B2190	Wind	Y	0,048	0.000	Rela	From start	0,000
	Wy - Rüzgar	GCS	Uniform	0,048	1.000	Length		0,000
LF1781	B2191	Wind	Y	0,048	0.000	Rela	From start	0,000
	Wy - Rüzgar	GCS	Uniform	0,048	1.000	Length		0,000
LF1782	B2192	Wind	Y	0,048	0.000	Rela	From start	0,000
	Wy - Rüzgar	GCS	Uniform	0,048	1.000	Length		0,000
LF1783	B2193	Wind	Y	0,048	0.000	Rela	From start	0,000
	Wy - Rüzgar	GCS	Uniform	0,048	1.000	Length		0,000

Name	Member Load case	Type System	Dir Distribution	Value - P_1 [kN/m] Value - P_2 [kN/m]	Pos x_1 Pos x_2	Coor Loc	Orig	Ecc ey Ecc ez
LF1784	B2194	Wind	Y	0,048	0.000	Rela	From start	0,000
	Wy - Rüzgar	GCS	Uniform	0,048	1.000	Length		0,000
LF1785	B2195	Wind	Y	0,048	0.000	Rela	From start	0,000
	Wy - Rüzgar	GCS	Uniform	0,048	1.000	Length		0,000
LF1786	B2196	Wind	Y	0,048	0.000	Rela	From start	0,000
	Wy - Rüzgar	GCS	Uniform	0,048	1.000	Length		0,000
LF1787	B2197	Wind	Y	0,048	0.000	Rela	From start	0,000
	Wy - Rüzgar	GCS	Uniform	0,048	1.000	Length		0,000
LF1788	PL582	Wind	Y	0,429	0.000	Rela	From start	0,000
	Wy - Rüzgar	GCS	Uniform	0,429	1.000	Length		0,000
LF1789	PL584	Wind	Y	0,429	0.000	Rela	From start	0,000
	Wy - Rüzgar	GCS	Uniform	0,429	1.000	Length		0,000
LF1790	PL586	Wind	Y	0,429	0.000	Rela	From start	0,000
	Wy - Rüzgar	GCS	Uniform	0,429	1.000	Length		0,000
LF1791	PL588	Wind	Y	0,429	0.000	Rela	From start	0,000
	Wy - Rüzgar	GCS	Uniform	0,429	1.000	Length		0,000
LF1792	PL590	Wind	Y	0,429	0.000	Rela	From start	0,000
	Wy - Rüzgar	GCS	Uniform	0,429	1.000	Length		0,000
LF1793	PL592	Wind	Y	0,429	0.000	Rela	From start	0,000
	Wy - Rüzgar	GCS	Uniform	0,429	1.000	Length		0,000
LF1794	PL594	Wind	Y	0,429	0.000	Rela	From start	0,000
	Wy - Rüzgar	GCS	Uniform	0,429	1.000	Length		0,000
LF1795	PL596	Wind	Y	0,429	0.000	Rela	From start	0,000
	Wy - Rüzgar	GCS	Uniform	0,429	1.000	Length		0,000
LF1796	PL598	Wind	Y	0,429	0.000	Rela	From start	0,000
	Wy - Rüzgar	GCS	Uniform	0,429	1.000	Length		0,000
LF1797	PL600	Wind	Y	0,429	0.000	Rela	From start	0,000
	Wy - Rüzgar	GCS	Uniform	0,429	1.000	Length		0,000
LF1798	CP254	Wind	Y	0,054	0.000	Rela	From start	0,000
	Wy - Rüzgar	GCS	Uniform	0,054	1.000	Length		0,000
LF1799	CP255	Wind	Y	0,054	0.000	Rela	From start	0,000
	Wy - Rüzgar	GCS	Uniform	0,054	1.000	Length		0,000
LF1800	CP256	Wind	Y	0,054	0.000	Rela	From start	0,000
	Wy - Rüzgar	GCS	Uniform	0,054	1.000	Length		0,000
LF1801	CP257	Wind	Y	0,054	0.000	Rela	From start	0,000
	Wy - Rüzgar	GCS	Uniform	0,054	1.000	Length		0,000
LF1802	CP258	Wind	Y	0,054	0.000	Rela	From start	0,000
	Wy - Rüzgar	GCS	Uniform	0,054	1.000	Length		0,000
LF1803	CP259	Wind	Y	0,054	0.000	Rela	From start	0,000
	Wy - Rüzgar	GCS	Uniform	0,054	1.000	Length		0,000
LF1804	B2198	Wind	Y	0,069	0.000	Rela	From start	0,000
	Wy - Rüzgar	GCS	Uniform	0,069	1.000	Length		0,000
LF1805	B2198	Wind	X	0,069	0.000	Rela	From start	0,000
	Wx - Rüzgar	GCS	Uniform	0,069	1.000	Length		0,000
LF1806	B2199	Wind	X	0,069	0.000	Rela	From start	0,000
	Wx - Rüzgar	GCS	Uniform	0,069	1.000	Length		0,000
LF1807	B2200	Wind	Y	0,069	0.000	Rela	From start	0,000
	Wy - Rüzgar	GCS	Uniform	0,069	1.000	Length		0,000
LF1808	B2202	Wind	Y	0,069	0.000	Rela	From start	0,000
	Wy - Rüzgar	GCS	Uniform	0,069	1.000	Length		0,000
LF1809	B2204	Wind	Y	0,069	0.000	Rela	From start	0,000
	Wy - Rüzgar	GCS	Uniform	0,069	1.000	Length		0,000
LF1810	B2206	Wind	Y	0,069	0.000	Rela	From start	0,000
	Wy - Rüzgar	GCS	Uniform	0,069	1.000	Length		0,000
LF1811	B2208	Wind	Y	0,069	0.000	Rela	From start	0,000
	Wy - Rüzgar	GCS	Uniform	0,069	1.000	Length		0,000
LF1812	B2210	Wind	Y	0,069	0.000	Rela	From start	0,000
	Wy - Rüzgar	GCS	Uniform	0,069	1.000	Length		0,000
LF1813	B2212	Wind	Y	0,069	0.000	Rela	From start	0,000
	Wy - Rüzgar	GCS	Uniform	0,069	1.000	Length		0,000
LF1814	B2214	Wind	X	0,057	0.000	Rela	From start	0,000
	Wx - Rüzgar	GCS	Uniform	0,057	1.000	Length		0,000
LF1815	B2222	Wind	Y	0,069	0.000	Rela	From start	0,000
	Wy - Rüzgar	GCS	Uniform	0,069	1.000	Length		0,000
LF1816	B2225	Wind	Y	0,069	0.000	Rela	From start	0,000
	Wy - Rüzgar	GCS	Uniform	0,069	1.000	Length		0,000
LF1817	B2228	Wind	Y	0,069	0.000	Rela	From start	0,000
	Wy - Rüzgar	GCS	Uniform	0,069	1.000	Length		0,000
LF1818	B2231	Wind	X	0,069	0.000	Rela	From start	0,000
	Wx - Rüzgar	GCS	Uniform	0,069	1.000	Length		0,000
LF1819	B2242	Wind	Y	0,048	0.000	Rela	From start	0,000
	Wy - Rüzgar	GCS	Uniform	0,048	1.000	Length		0,000
LF1820	B2243	Wind	Y	0,048	0.000	Rela	From start	0,000
	Wy - Rüzgar	GCS	Uniform	0,048	1.000	Length		0,000

Name	Member Load case	Type System	Dir Distribution	Value - P_1 [kN/m] Value - P_2 [kN/m]	Pos x_1 Pos x_2	Coor Loc	Orig	Ecc ey Ecc ez
LF1821	B2244	Wind	Y	0,048	0.000	Rela	From start	0,000
	Wy - Rüzgar	GCS	Uniform	0,048	1.000	Length		0,000
LF1822	B2245	Wind	Y	0,048	0.000	Rela	From start	0,000
	Wy - Rüzgar	GCS	Uniform	0,048	1.000	Length		0,000
LF1823	B2246	Wind	Y	0,048	0.000	Rela	From start	0,000
	Wy - Rüzgar	GCS	Uniform	0,048	1.000	Length		0,000
LF1824	B2247	Wind	Y	0,048	0.000	Rela	From start	0,000
	Wy - Rüzgar	GCS	Uniform	0,048	1.000	Length		0,000
LF1825	B2248	Wind	Y	0,048	0.000	Rela	From start	0,000
	Wy - Rüzgar	GCS	Uniform	0,048	1.000	Length		0,000
LF1826	B2249	Wind	Y	0,048	0.000	Rela	From start	0,000
	Wy - Rüzgar	GCS	Uniform	0,048	1.000	Length		0,000
LF1827	B2250	Wind	Y	0,048	0.000	Rela	From start	0,000
	Wy - Rüzgar	GCS	Uniform	0,048	1.000	Length		0,000
LF1828	B2251	Wind	Y	0,048	0.000	Rela	From start	0,000
	Wy - Rüzgar	GCS	Uniform	0,048	1.000	Length		0,000
LF1829	B2252	Wind	Y	0,048	0.000	Rela	From start	0,000
	Wy - Rüzgar	GCS	Uniform	0,048	1.000	Length		0,000
LF1830	B2253	Wind	Y	0,048	0.000	Rela	From start	0,000
	Wy - Rüzgar	GCS	Uniform	0,048	1.000	Length		0,000
LF1831	B2254	Wind	Y	0,048	0.000	Rela	From start	0,000
	Wy - Rüzgar	GCS	Uniform	0,048	1.000	Length		0,000
LF1832	B2255	Wind	Y	0,048	0.000	Rela	From start	0,000
	Wy - Rüzgar	GCS	Uniform	0,048	1.000	Length		0,000
LF1833	B2256	Wind	Y	0,048	0.000	Rela	From start	0,000
	Wy - Rüzgar	GCS	Uniform	0,048	1.000	Length		0,000
LF1834	B2257	Wind	Y	0,048	0.000	Rela	From start	0,000
	Wy - Rüzgar	GCS	Uniform	0,048	1.000	Length		0,000
LF1835	B2258	Wind	Y	0,048	0.000	Rela	From start	0,000
	Wy - Rüzgar	GCS	Uniform	0,048	1.000	Length		0,000
LF1836	B2259	Wind	Y	0,048	0.000	Rela	From start	0,000
	Wy - Rüzgar	GCS	Uniform	0,048	1.000	Length		0,000
LF1837	B2260	Wind	Y	0,048	0.000	Rela	From start	0,000
	Wy - Rüzgar	GCS	Uniform	0,048	1.000	Length		0,000
LF1838	B2261	Wind	Y	0,048	0.000	Rela	From start	0,000
	Wy - Rüzgar	GCS	Uniform	0,048	1.000	Length		0,000
LF1839	PL602	Wind	Y	0,429	0.000	Rela	From start	0,000
	Wy - Rüzgar	GCS	Uniform	0,429	1.000	Length		0,000
LF1840	PL604	Wind	Y	0,429	0.000	Rela	From start	0,000
	Wy - Rüzgar	GCS	Uniform	0,429	1.000	Length		0,000
LF1841	PL606	Wind	Y	0,429	0.000	Rela	From start	0,000
	Wy - Rüzgar	GCS	Uniform	0,429	1.000	Length		0,000
LF1842	PL608	Wind	Y	0,429	0.000	Rela	From start	0,000
	Wy - Rüzgar	GCS	Uniform	0,429	1.000	Length		0,000
LF1843	PL610	Wind	Y	0,429	0.000	Rela	From start	0,000
	Wy - Rüzgar	GCS	Uniform	0,429	1.000	Length		0,000
LF1844	PL612	Wind	Y	0,429	0.000	Rela	From start	0,000
	Wy - Rüzgar	GCS	Uniform	0,429	1.000	Length		0,000
LF1845	PL614	Wind	Y	0,429	0.000	Rela	From start	0,000
	Wy - Rüzgar	GCS	Uniform	0,429	1.000	Length		0,000
LF1846	PL616	Wind	Y	0,429	0.000	Rela	From start	0,000
	Wy - Rüzgar	GCS	Uniform	0,429	1.000	Length		0,000
LF1847	PL618	Wind	Y	0,429	0.000	Rela	From start	0,000
	Wy - Rüzgar	GCS	Uniform	0,429	1.000	Length		0,000
LF1848	PL620	Wind	Y	0,429	0.000	Rela	From start	0,000
	Wy - Rüzgar	GCS	Uniform	0,429	1.000	Length		0,000
LF1849	CP260	Wind	Y	0,054	0.000	Rela	From start	0,000
	Wy - Rüzgar	GCS	Uniform	0,054	1.000	Length		0,000
LF1850	CP261	Wind	Y	0,054	0.000	Rela	From start	0,000
	Wy - Rüzgar	GCS	Uniform	0,054	1.000	Length		0,000
LF1851	CP262	Wind	Y	0,054	0.000	Rela	From start	0,000
	Wy - Rüzgar	GCS	Uniform	0,054	1.000	Length		0,000
LF1852	CP263	Wind	Y	0,054	0.000	Rela	From start	0,000
	Wy - Rüzgar	GCS	Uniform	0,054	1.000	Length		0,000
LF1853	CP264	Wind	Y	0,054	0.000	Rela	From start	0,000
	Wy - Rüzgar	GCS	Uniform	0,054	1.000	Length		0,000
LF1854	CP265	Wind	Y	0,054	0.000	Rela	From start	0,000
	Wy - Rüzgar	GCS	Uniform	0,054	1.000	Length		0,000
LF1855	B2262	Wind	Y	0,069	0.000	Rela	From start	0,000
	Wy - Rüzgar	GCS	Uniform	0,069	1.000	Length		0,000
LF1856	B2262	Wind	X	0,069	0.000	Rela	From start	0,000
	Wx - Rüzgar	GCS	Uniform	0,069	1.000	Length		0,000
LF1857	B2263	Wind	X	0,069	0.000	Rela	From start	0,000
	Wx - Rüzgar	GCS	Uniform	0,069	1.000	Length		0,000

Name	Member Load case	Type System	Dir Distribution	Value - P_1 [kN/m] Value - P_2 [kN/m]	Pos x_1 Pos x_2	Coor Loc	Orig	Ecc ey Ecc ez
LF1858	B2264	Wind	Y	0,069	0.000	Rela	From start	0,000
	Wy - Rüzgar	GCS	Uniform	0,069	1.000	Length		0,000
LF1859	B2266	Wind	Y	0,069	0.000	Rela	From start	0,000
	Wy - Rüzgar	GCS	Uniform	0,069	1.000	Length		0,000
LF1860	B2268	Wind	Y	0,069	0.000	Rela	From start	0,000
	Wy - Rüzgar	GCS	Uniform	0,069	1.000	Length		0,000
LF1861	B2270	Wind	Y	0,069	0.000	Rela	From start	0,000
	Wy - Rüzgar	GCS	Uniform	0,069	1.000	Length		0,000
LF1862	B2272	Wind	Y	0,069	0.000	Rela	From start	0,000
	Wy - Rüzgar	GCS	Uniform	0,069	1.000	Length		0,000
LF1863	B2274	Wind	Y	0,069	0.000	Rela	From start	0,000
	Wy - Rüzgar	GCS	Uniform	0,069	1.000	Length		0,000
LF1864	B2276	Wind	Y	0,069	0.000	Rela	From start	0,000
	Wy - Rüzgar	GCS	Uniform	0,069	1.000	Length		0,000
LF1865	B2278	Wind	X	0,057	0.000	Rela	From start	0,000
	Wx - Rüzgar	GCS	Uniform	0,057	1.000	Length		0,000
LF1866	B2286	Wind	Y	0,069	0.000	Rela	From start	0,000
	Wy - Rüzgar	GCS	Uniform	0,069	1.000	Length		0,000
LF1867	B2289	Wind	Y	0,069	0.000	Rela	From start	0,000
	Wy - Rüzgar	GCS	Uniform	0,069	1.000	Length		0,000
LF1868	B2292	Wind	Y	0,069	0.000	Rela	From start	0,000
	Wy - Rüzgar	GCS	Uniform	0,069	1.000	Length		0,000
LF1869	B2295	Wind	X	0,069	0.000	Rela	From start	0,000
	Wx - Rüzgar	GCS	Uniform	0,069	1.000	Length		0,000
LF1870	B2306	Wind	Y	0,048	0.000	Rela	From start	0,000
	Wy - Rüzgar	GCS	Uniform	0,048	1.000	Length		0,000
LF1871	B2307	Wind	Y	0,048	0.000	Rela	From start	0,000
	Wy - Rüzgar	GCS	Uniform	0,048	1.000	Length		0,000
LF1872	B2308	Wind	Y	0,048	0.000	Rela	From start	0,000
	Wy - Rüzgar	GCS	Uniform	0,048	1.000	Length		0,000
LF1873	B2309	Wind	Y	0,048	0.000	Rela	From start	0,000
	Wy - Rüzgar	GCS	Uniform	0,048	1.000	Length		0,000
LF1874	B2310	Wind	Y	0,048	0.000	Rela	From start	0,000
	Wy - Rüzgar	GCS	Uniform	0,048	1.000	Length		0,000
LF1875	B2311	Wind	Y	0,048	0.000	Rela	From start	0,000
	Wy - Rüzgar	GCS	Uniform	0,048	1.000	Length		0,000
LF1876	B2312	Wind	Y	0,048	0.000	Rela	From start	0,000
	Wy - Rüzgar	GCS	Uniform	0,048	1.000	Length		0,000
LF1877	B2313	Wind	Y	0,048	0.000	Rela	From start	0,000
	Wy - Rüzgar	GCS	Uniform	0,048	1.000	Length		0,000
LF1878	B2314	Wind	Y	0,048	0.000	Rela	From start	0,000
	Wy - Rüzgar	GCS	Uniform	0,048	1.000	Length		0,000
LF1879	B2315	Wind	Y	0,048	0.000	Rela	From start	0,000
	Wy - Rüzgar	GCS	Uniform	0,048	1.000	Length		0,000
LF1880	B2316	Wind	Y	0,048	0.000	Rela	From start	0,000
	Wy - Rüzgar	GCS	Uniform	0,048	1.000	Length		0,000
LF1881	B2317	Wind	Y	0,048	0.000	Rela	From start	0,000
	Wy - Rüzgar	GCS	Uniform	0,048	1.000	Length		0,000
LF1882	B2318	Wind	Y	0,048	0.000	Rela	From start	0,000
	Wy - Rüzgar	GCS	Uniform	0,048	1.000	Length		0,000
LF1883	B2319	Wind	Y	0,048	0.000	Rela	From start	0,000
	Wy - Rüzgar	GCS	Uniform	0,048	1.000	Length		0,000
LF1884	B2320	Wind	Y	0,048	0.000	Rela	From start	0,000
	Wy - Rüzgar	GCS	Uniform	0,048	1.000	Length		0,000
LF1885	B2321	Wind	Y	0,048	0.000	Rela	From start	0,000
	Wy - Rüzgar	GCS	Uniform	0,048	1.000	Length		0,000
LF1886	B2322	Wind	Y	0,048	0.000	Rela	From start	0,000
	Wy - Rüzgar	GCS	Uniform	0,048	1.000	Length		0,000
LF1887	B2323	Wind	Y	0,048	0.000	Rela	From start	0,000
	Wy - Rüzgar	GCS	Uniform	0,048	1.000	Length		0,000
LF1888	B2324	Wind	Y	0,048	0.000	Rela	From start	0,000
	Wy - Rüzgar	GCS	Uniform	0,048	1.000	Length		0,000
LF1889	B2325	Wind	Y	0,048	0.000	Rela	From start	0,000
	Wy - Rüzgar	GCS	Uniform	0,048	1.000	Length		0,000
LF1890	PL622	Wind	Y	0,429	0.000	Rela	From start	0,000
	Wy - Rüzgar	GCS	Uniform	0,429	1.000	Length		0,000
LF1891	PL624	Wind	Y	0,429	0.000	Rela	From start	0,000
	Wy - Rüzgar	GCS	Uniform	0,429	1.000	Length		0,000
LF1892	PL626	Wind	Y	0,429	0.000	Rela	From start	0,000
	Wy - Rüzgar	GCS	Uniform	0,429	1.000	Length		0,000
LF1893	PL628	Wind	Y	0,429	0.000	Rela	From start	0,000
	Wy - Rüzgar	GCS	Uniform	0,429	1.000	Length		0,000
LF1894	PL630	Wind	Y	0,429	0.000	Rela	From start	0,000
	Wy - Rüzgar	GCS	Uniform	0,429	1.000	Length		0,000

Name	Member Load case	Type System	Dir Distribution	Value - P_1 [kN/m] Value - P_2 [kN/m]	Pos x_1 Pos x_2	Coor Loc	Orig	Ecc ey Ecc ez
LF1895	PL632	Wind	Y	0,429	0.000	Rela	From start	0,000
	Wy - Rüzgar	GCS	Uniform	0,429	1.000	Length		0,000
LF1896	PL634	Wind	Y	0,429	0.000	Rela	From start	0,000
	Wy - Rüzgar	GCS	Uniform	0,429	1.000	Length		0,000
LF1897	PL636	Wind	Y	0,429	0.000	Rela	From start	0,000
	Wy - Rüzgar	GCS	Uniform	0,429	1.000	Length		0,000
LF1898	PL638	Wind	Y	0,429	0.000	Rela	From start	0,000
	Wy - Rüzgar	GCS	Uniform	0,429	1.000	Length		0,000
LF1899	PL640	Wind	Y	0,429	0.000	Rela	From start	0,000
	Wy - Rüzgar	GCS	Uniform	0,429	1.000	Length		0,000
LF1900	CP266	Wind	Y	0,054	0.000	Rela	From start	0,000
	Wy - Rüzgar	GCS	Uniform	0,054	1.000	Length		0,000
LF1901	CP267	Wind	Y	0,054	0.000	Rela	From start	0,000
	Wy - Rüzgar	GCS	Uniform	0,054	1.000	Length		0,000
LF1902	CP268	Wind	Y	0,054	0.000	Rela	From start	0,000
	Wy - Rüzgar	GCS	Uniform	0,054	1.000	Length		0,000
LF1903	CP269	Wind	Y	0,054	0.000	Rela	From start	0,000
	Wy - Rüzgar	GCS	Uniform	0,054	1.000	Length		0,000
LF1904	CP270	Wind	Y	0,054	0.000	Rela	From start	0,000
	Wy - Rüzgar	GCS	Uniform	0,054	1.000	Length		0,000
LF1905	CP271	Wind	Y	0,054	0.000	Rela	From start	0,000
	Wy - Rüzgar	GCS	Uniform	0,054	1.000	Length		0,000
LF1906	B2326	Wind	Y	0,069	0.000	Rela	From start	0,000
	Wy - Rüzgar	GCS	Uniform	0,069	1.000	Length		0,000
LF1907	B2326	Wind	X	0,069	0.000	Rela	From start	0,000
	Wx - Rüzgar	GCS	Uniform	0,069	1.000	Length		0,000
LF1908	B2327	Wind	X	0,069	0.000	Rela	From start	0,000
	Wx - Rüzgar	GCS	Uniform	0,069	1.000	Length		0,000
LF1909	B2328	Wind	Y	0,069	0.000	Rela	From start	0,000
	Wy - Rüzgar	GCS	Uniform	0,069	1.000	Length		0,000
LF1910	B2330	Wind	Y	0,069	0.000	Rela	From start	0,000
	Wy - Rüzgar	GCS	Uniform	0,069	1.000	Length		0,000
LF1911	B2332	Wind	Y	0,069	0.000	Rela	From start	0,000
	Wy - Rüzgar	GCS	Uniform	0,069	1.000	Length		0,000
LF1912	B2334	Wind	Y	0,069	0.000	Rela	From start	0,000
	Wy - Rüzgar	GCS	Uniform	0,069	1.000	Length		0,000
LF1913	B2336	Wind	Y	0,069	0.000	Rela	From start	0,000
	Wy - Rüzgar	GCS	Uniform	0,069	1.000	Length		0,000
LF1914	B2338	Wind	Y	0,069	0.000	Rela	From start	0,000
	Wy - Rüzgar	GCS	Uniform	0,069	1.000	Length		0,000
LF1915	B2340	Wind	Y	0,069	0.000	Rela	From start	0,000
	Wy - Rüzgar	GCS	Uniform	0,069	1.000	Length		0,000
LF1916	B2342	Wind	X	0,057	0.000	Rela	From start	0,000
	Wx - Rüzgar	GCS	Uniform	0,057	1.000	Length		0,000
LF1917	B2350	Wind	Y	0,069	0.000	Rela	From start	0,000
	Wy - Rüzgar	GCS	Uniform	0,069	1.000	Length		0,000
LF1918	B2353	Wind	Y	0,069	0.000	Rela	From start	0,000
	Wy - Rüzgar	GCS	Uniform	0,069	1.000	Length		0,000
LF1919	B2356	Wind	Y	0,069	0.000	Rela	From start	0,000
	Wy - Rüzgar	GCS	Uniform	0,069	1.000	Length		0,000
LF1920	B2359	Wind	X	0,069	0.000	Rela	From start	0,000
	Wx - Rüzgar	GCS	Uniform	0,069	1.000	Length		0,000
LF1921	B2370	Wind	Y	0,048	0.000	Rela	From start	0,000
	Wy - Rüzgar	GCS	Uniform	0,048	1.000	Length		0,000
LF1922	B2371	Wind	Y	0,048	0.000	Rela	From start	0,000
	Wy - Rüzgar	GCS	Uniform	0,048	1.000	Length		0,000
LF1923	B2372	Wind	Y	0,048	0.000	Rela	From start	0,000
	Wy - Rüzgar	GCS	Uniform	0,048	1.000	Length		0,000
LF1924	B2373	Wind	Y	0,048	0.000	Rela	From start	0,000
	Wy - Rüzgar	GCS	Uniform	0,048	1.000	Length		0,000
LF1925	B2374	Wind	Y	0,048	0.000	Rela	From start	0,000
	Wy - Rüzgar	GCS	Uniform	0,048	1.000	Length		0,000
LF1926	B2375	Wind	Y	0,048	0.000	Rela	From start	0,000
	Wy - Rüzgar	GCS	Uniform	0,048	1.000	Length		0,000
LF1927	B2376	Wind	Y	0,048	0.000	Rela	From start	0,000
	Wy - Rüzgar	GCS	Uniform	0,048	1.000	Length		0,000
LF1928	B2377	Wind	Y	0,048	0.000	Rela	From start	0,000
	Wy - Rüzgar	GCS	Uniform	0,048	1.000	Length		0,000
LF1929	B2378	Wind	Y	0,048	0.000	Rela	From start	0,000
	Wy - Rüzgar	GCS	Uniform	0,048	1.000	Length		0,000
LF1930	B2379	Wind	Y	0,048	0.000	Rela	From start	0,000
	Wy - Rüzgar	GCS	Uniform	0,048	1.000	Length		0,000
LF1931	B2380	Wind	Y	0,048	0.000	Rela	From start	0,000
	Wy - Rüzgar	GCS	Uniform	0,048	1.000	Length		0,000

Name	Member Load case	Type System	Dir Distribution	Value - P_1 [kN/m] Value - P_2 [kN/m]	Pos x_1 Pos x_2	Coor Loc	Orig	Ecc ey Ecc ez
LF1932	B2381	Wind	Y	0,048	0.000	Rela	From start	0,000
	Wy - Rüzgar	GCS	Uniform	0,048	1.000	Length		0,000
LF1933	B2382	Wind	Y	0,048	0.000	Rela	From start	0,000
	Wy - Rüzgar	GCS	Uniform	0,048	1.000	Length		0,000
LF1934	B2383	Wind	Y	0,048	0.000	Rela	From start	0,000
	Wy - Rüzgar	GCS	Uniform	0,048	1.000	Length		0,000
LF1935	B2384	Wind	Y	0,048	0.000	Rela	From start	0,000
	Wy - Rüzgar	GCS	Uniform	0,048	1.000	Length		0,000
LF1936	B2385	Wind	Y	0,048	0.000	Rela	From start	0,000
	Wy - Rüzgar	GCS	Uniform	0,048	1.000	Length		0,000
LF1937	B2386	Wind	Y	0,048	0.000	Rela	From start	0,000
	Wy - Rüzgar	GCS	Uniform	0,048	1.000	Length		0,000
LF1938	B2387	Wind	Y	0,048	0.000	Rela	From start	0,000
	Wy - Rüzgar	GCS	Uniform	0,048	1.000	Length		0,000
LF1939	B2388	Wind	Y	0,048	0.000	Rela	From start	0,000
	Wy - Rüzgar	GCS	Uniform	0,048	1.000	Length		0,000
LF1940	B2389	Wind	Y	0,048	0.000	Rela	From start	0,000
	Wy - Rüzgar	GCS	Uniform	0,048	1.000	Length		0,000
LF1941	PL642	Wind	Y	0,429	0.000	Rela	From start	0,000
	Wy - Rüzgar	GCS	Uniform	0,429	1.000	Length		0,000
LF1942	PL644	Wind	Y	0,429	0.000	Rela	From start	0,000
	Wy - Rüzgar	GCS	Uniform	0,429	1.000	Length		0,000
LF1943	PL646	Wind	Y	0,429	0.000	Rela	From start	0,000
	Wy - Rüzgar	GCS	Uniform	0,429	1.000	Length		0,000
LF1944	PL648	Wind	Y	0,429	0.000	Rela	From start	0,000
	Wy - Rüzgar	GCS	Uniform	0,429	1.000	Length		0,000
LF1945	PL650	Wind	Y	0,429	0.000	Rela	From start	0,000
	Wy - Rüzgar	GCS	Uniform	0,429	1.000	Length		0,000
LF1946	PL652	Wind	Y	0,429	0.000	Rela	From start	0,000
	Wy - Rüzgar	GCS	Uniform	0,429	1.000	Length		0,000
LF1947	PL654	Wind	Y	0,429	0.000	Rela	From start	0,000
	Wy - Rüzgar	GCS	Uniform	0,429	1.000	Length		0,000
LF1948	PL656	Wind	Y	0,429	0.000	Rela	From start	0,000
	Wy - Rüzgar	GCS	Uniform	0,429	1.000	Length		0,000
LF1949	PL658	Wind	Y	0,429	0.000	Rela	From start	0,000
	Wy - Rüzgar	GCS	Uniform	0,429	1.000	Length		0,000
LF1950	PL660	Wind	Y	0,429	0.000	Rela	From start	0,000
	Wy - Rüzgar	GCS	Uniform	0,429	1.000	Length		0,000
LF1951	CP272	Wind	Y	0,054	0.000	Rela	From start	0,000
	Wy - Rüzgar	GCS	Uniform	0,054	1.000	Length		0,000
LF1952	CP273	Wind	Y	0,054	0.000	Rela	From start	0,000
	Wy - Rüzgar	GCS	Uniform	0,054	1.000	Length		0,000
LF1953	CP274	Wind	Y	0,054	0.000	Rela	From start	0,000
	Wy - Rüzgar	GCS	Uniform	0,054	1.000	Length		0,000
LF1954	CP275	Wind	Y	0,054	0.000	Rela	From start	0,000
	Wy - Rüzgar	GCS	Uniform	0,054	1.000	Length		0,000
LF1955	CP276	Wind	Y	0,054	0.000	Rela	From start	0,000
	Wy - Rüzgar	GCS	Uniform	0,054	1.000	Length		0,000
LF1956	CP277	Wind	Y	0,054	0.000	Rela	From start	0,000
	Wy - Rüzgar	GCS	Uniform	0,054	1.000	Length		0,000
LF1957	B2390	Wind	Y	0,069	0.000	Rela	From start	0,000
	Wy - Rüzgar	GCS	Uniform	0,069	1.000	Length		0,000
LF1958	B2390	Wind	X	0,069	0.000	Rela	From start	0,000
	Wx - Rüzgar	GCS	Uniform	0,069	1.000	Length		0,000
LF1959	B2391	Wind	X	0,069	0.000	Rela	From start	0,000
	Wx - Rüzgar	GCS	Uniform	0,069	1.000	Length		0,000
LF1960	B2392	Wind	Y	0,069	0.000	Rela	From start	0,000
	Wy - Rüzgar	GCS	Uniform	0,069	1.000	Length		0,000
LF1961	B2394	Wind	Y	0,069	0.000	Rela	From start	0,000
	Wy - Rüzgar	GCS	Uniform	0,069	1.000	Length		0,000
LF1962	B2396	Wind	Y	0,069	0.000	Rela	From start	0,000
	Wy - Rüzgar	GCS	Uniform	0,069	1.000	Length		0,000
LF1963	B2398	Wind	Y	0,069	0.000	Rela	From start	0,000
	Wy - Rüzgar	GCS	Uniform	0,069	1.000	Length		0,000
LF1964	B2400	Wind	Y	0,069	0.000	Rela	From start	0,000
	Wy - Rüzgar	GCS	Uniform	0,069	1.000	Length		0,000
LF1965	B2402	Wind	Y	0,069	0.000	Rela	From start	0,000
	Wy - Rüzgar	GCS	Uniform	0,069	1.000	Length		0,000
LF1966	B2404	Wind	Y	0,069	0.000	Rela	From start	0,000
	Wy - Rüzgar	GCS	Uniform	0,069	1.000	Length		0,000
LF1967	B2406	Wind	X	0,057	0.000	Rela	From start	0,000
	Wx - Rüzgar	GCS	Uniform	0,057	1.000	Length		0,000
LF1968	B2414	Wind	Y	0,069	0.000	Rela	From start	0,000
	Wy - Rüzgar	GCS	Uniform	0,069	1.000	Length		0,000

Name	Member Load case	Type System	Dir Distribution	Value - P_1 [kN/m] Value - P_2 [kN/m]	Pos x_1 Pos x_2	Coor Loc	Orig	Ecc ey Ecc ez
LF1969	B2417	Wind	Y	0,069	0.000	Rela	From start	0,000
	Wy - Rüzgar	GCS	Uniform	0,069	1.000	Length		0,000
LF1970	B2420	Wind	Y	0,069	0.000	Rela	From start	0,000
	Wy - Rüzgar	GCS	Uniform	0,069	1.000	Length		0,000
LF1971	B2423	Wind	X	0,069	0.000	Rela	From start	0,000
	Wx - Rüzgar	GCS	Uniform	0,069	1.000	Length		0,000
LF1972	B2434	Wind	Y	0,048	0.000	Rela	From start	0,000
	Wy - Rüzgar	GCS	Uniform	0,048	1.000	Length		0,000
LF1973	B2435	Wind	Y	0,048	0.000	Rela	From start	0,000
	Wy - Rüzgar	GCS	Uniform	0,048	1.000	Length		0,000
LF1974	B2436	Wind	Y	0,048	0.000	Rela	From start	0,000
	Wy - Rüzgar	GCS	Uniform	0,048	1.000	Length		0,000
LF1975	B2437	Wind	Y	0,048	0.000	Rela	From start	0,000
	Wy - Rüzgar	GCS	Uniform	0,048	1.000	Length		0,000
LF1976	B2438	Wind	Y	0,048	0.000	Rela	From start	0,000
	Wy - Rüzgar	GCS	Uniform	0,048	1.000	Length		0,000
LF1977	B2439	Wind	Y	0,048	0.000	Rela	From start	0,000
	Wy - Rüzgar	GCS	Uniform	0,048	1.000	Length		0,000
LF1978	B2440	Wind	Y	0,048	0.000	Rela	From start	0,000
	Wy - Rüzgar	GCS	Uniform	0,048	1.000	Length		0,000
LF1979	B2441	Wind	Y	0,048	0.000	Rela	From start	0,000
	Wy - Rüzgar	GCS	Uniform	0,048	1.000	Length		0,000
LF1980	B2442	Wind	Y	0,048	0.000	Rela	From start	0,000
	Wy - Rüzgar	GCS	Uniform	0,048	1.000	Length		0,000
LF1981	B2443	Wind	Y	0,048	0.000	Rela	From start	0,000
	Wy - Rüzgar	GCS	Uniform	0,048	1.000	Length		0,000
LF1982	B2444	Wind	Y	0,048	0.000	Rela	From start	0,000
	Wy - Rüzgar	GCS	Uniform	0,048	1.000	Length		0,000
LF1983	B2445	Wind	Y	0,048	0.000	Rela	From start	0,000
	Wy - Rüzgar	GCS	Uniform	0,048	1.000	Length		0,000
LF1984	B2446	Wind	Y	0,048	0.000	Rela	From start	0,000
	Wy - Rüzgar	GCS	Uniform	0,048	1.000	Length		0,000
LF1985	B2447	Wind	Y	0,048	0.000	Rela	From start	0,000
	Wy - Rüzgar	GCS	Uniform	0,048	1.000	Length		0,000
LF1986	B2448	Wind	Y	0,048	0.000	Rela	From start	0,000
	Wy - Rüzgar	GCS	Uniform	0,048	1.000	Length		0,000
LF1987	B2449	Wind	Y	0,048	0.000	Rela	From start	0,000
	Wy - Rüzgar	GCS	Uniform	0,048	1.000	Length		0,000
LF1988	B2450	Wind	Y	0,048	0.000	Rela	From start	0,000
	Wy - Rüzgar	GCS	Uniform	0,048	1.000	Length		0,000
LF1989	B2451	Wind	Y	0,048	0.000	Rela	From start	0,000
	Wy - Rüzgar	GCS	Uniform	0,048	1.000	Length		0,000
LF1990	B2452	Wind	Y	0,048	0.000	Rela	From start	0,000
	Wy - Rüzgar	GCS	Uniform	0,048	1.000	Length		0,000
LF1991	B2453	Wind	Y	0,048	0.000	Rela	From start	0,000
	Wy - Rüzgar	GCS	Uniform	0,048	1.000	Length		0,000
LF1992	PL662	Wind	Y	0,429	0.000	Rela	From start	0,000
	Wy - Rüzgar	GCS	Uniform	0,429	1.000	Length		0,000
LF1993	PL664	Wind	Y	0,429	0.000	Rela	From start	0,000
	Wy - Rüzgar	GCS	Uniform	0,429	1.000	Length		0,000
LF1994	PL666	Wind	Y	0,429	0.000	Rela	From start	0,000
	Wy - Rüzgar	GCS	Uniform	0,429	1.000	Length		0,000
LF1995	PL668	Wind	Y	0,429	0.000	Rela	From start	0,000
	Wy - Rüzgar	GCS	Uniform	0,429	1.000	Length		0,000
LF1996	PL670	Wind	Y	0,429	0.000	Rela	From start	0,000
	Wy - Rüzgar	GCS	Uniform	0,429	1.000	Length		0,000
LF1997	PL672	Wind	Y	0,429	0.000	Rela	From start	0,000
	Wy - Rüzgar	GCS	Uniform	0,429	1.000	Length		0,000
LF1998	PL674	Wind	Y	0,429	0.000	Rela	From start	0,000
	Wy - Rüzgar	GCS	Uniform	0,429	1.000	Length		0,000
LF1999	PL676	Wind	Y	0,429	0.000	Rela	From start	0,000
	Wy - Rüzgar	GCS	Uniform	0,429	1.000	Length		0,000
LF2000	PL678	Wind	Y	0,429	0.000	Rela	From start	0,000
	Wy - Rüzgar	GCS	Uniform	0,429	1.000	Length		0,000
LF2001	PL680	Wind	Y	0,429	0.000	Rela	From start	0,000
	Wy - Rüzgar	GCS	Uniform	0,429	1.000	Length		0,000
LF2002	CP278	Wind	Y	0,054	0.000	Rela	From start	0,000
	Wy - Rüzgar	GCS	Uniform	0,054	1.000	Length		0,000
LF2003	CP279	Wind	Y	0,054	0.000	Rela	From start	0,000
	Wy - Rüzgar	GCS	Uniform	0,054	1.000	Length		0,000
LF2004	CP280	Wind	Y	0,054	0.000	Rela	From start	0,000
	Wy - Rüzgar	GCS	Uniform	0,054	1.000	Length		0,000
LF2005	CP281	Wind	Y	0,054	0.000	Rela	From start	0,000
	Wy - Rüzgar	GCS	Uniform	0,054	1.000	Length		0,000

Name	Member Load case	Type System	Dir Distribution	Value - P_1 [kN/m] Value - P_2 [kN/m]	Pos x_1 Pos x_2	Coor Loc	Orig	Ecc ey Ecc ez
LF2006	CP282	Wind	Y	0,054	0.000	Rela	From start	0,000
	Wy - Rüzgar	GCS	Uniform	0,054	1.000	Length		0,000
LF2007	CP283	Wind	Y	0,054	0.000	Rela	From start	0,000
	Wy - Rüzgar	GCS	Uniform	0,054	1.000	Length		0,000
LF2008	B2454	Wind	Y	0,069	0.000	Rela	From start	0,000
	Wy - Rüzgar	GCS	Uniform	0,069	1.000	Length		0,000
LF2009	B2454	Wind	X	0,069	0.000	Rela	From start	0,000
	Wx - Rüzgar	GCS	Uniform	0,069	1.000	Length		0,000
LF2010	B2455	Wind	X	0,069	0.000	Rela	From start	0,000
	Wx - Rüzgar	GCS	Uniform	0,069	1.000	Length		0,000
LF2011	B2456	Wind	Y	0,069	0.000	Rela	From start	0,000
	Wy - Rüzgar	GCS	Uniform	0,069	1.000	Length		0,000
LF2012	B2458	Wind	Y	0,069	0.000	Rela	From start	0,000
	Wy - Rüzgar	GCS	Uniform	0,069	1.000	Length		0,000
LF2013	B2460	Wind	Y	0,069	0.000	Rela	From start	0,000
	Wy - Rüzgar	GCS	Uniform	0,069	1.000	Length		0,000
LF2014	B2462	Wind	Y	0,069	0.000	Rela	From start	0,000
	Wy - Rüzgar	GCS	Uniform	0,069	1.000	Length		0,000
LF2015	B2464	Wind	Y	0,069	0.000	Rela	From start	0,000
	Wy - Rüzgar	GCS	Uniform	0,069	1.000	Length		0,000
LF2016	B2466	Wind	Y	0,069	0.000	Rela	From start	0,000
	Wy - Rüzgar	GCS	Uniform	0,069	1.000	Length		0,000
LF2017	B2468	Wind	Y	0,069	0.000	Rela	From start	0,000
	Wy - Rüzgar	GCS	Uniform	0,069	1.000	Length		0,000
LF2018	B2470	Wind	X	0,057	0.000	Rela	From start	0,000
	Wx - Rüzgar	GCS	Uniform	0,057	1.000	Length		0,000
LF2019	B2478	Wind	Y	0,069	0.000	Rela	From start	0,000
	Wy - Rüzgar	GCS	Uniform	0,069	1.000	Length		0,000
LF2020	B2481	Wind	Y	0,069	0.000	Rela	From start	0,000
	Wy - Rüzgar	GCS	Uniform	0,069	1.000	Length		0,000
LF2021	B2484	Wind	Y	0,069	0.000	Rela	From start	0,000
	Wy - Rüzgar	GCS	Uniform	0,069	1.000	Length		0,000
LF2022	B2487	Wind	X	0,069	0.000	Rela	From start	0,000
	Wx - Rüzgar	GCS	Uniform	0,069	1.000	Length		0,000
LF2023	B2498	Wind	Y	0,048	0.000	Rela	From start	0,000
	Wy - Rüzgar	GCS	Uniform	0,048	1.000	Length		0,000
LF2024	B2499	Wind	Y	0,048	0.000	Rela	From start	0,000
	Wy - Rüzgar	GCS	Uniform	0,048	1.000	Length		0,000
LF2025	B2500	Wind	Y	0,048	0.000	Rela	From start	0,000
	Wy - Rüzgar	GCS	Uniform	0,048	1.000	Length		0,000
LF2026	B2501	Wind	Y	0,048	0.000	Rela	From start	0,000
	Wy - Rüzgar	GCS	Uniform	0,048	1.000	Length		0,000
LF2027	B2502	Wind	Y	0,048	0.000	Rela	From start	0,000
	Wy - Rüzgar	GCS	Uniform	0,048	1.000	Length		0,000
LF2028	B2503	Wind	Y	0,048	0.000	Rela	From start	0,000
	Wy - Rüzgar	GCS	Uniform	0,048	1.000	Length		0,000
LF2029	B2504	Wind	Y	0,048	0.000	Rela	From start	0,000
	Wy - Rüzgar	GCS	Uniform	0,048	1.000	Length		0,000
LF2030	B2505	Wind	Y	0,048	0.000	Rela	From start	0,000
	Wy - Rüzgar	GCS	Uniform	0,048	1.000	Length		0,000
LF2031	B2506	Wind	Y	0,048	0.000	Rela	From start	0,000
	Wy - Rüzgar	GCS	Uniform	0,048	1.000	Length		0,000
LF2032	B2507	Wind	Y	0,048	0.000	Rela	From start	0,000
	Wy - Rüzgar	GCS	Uniform	0,048	1.000	Length		0,000
LF2033	B2508	Wind	Y	0,048	0.000	Rela	From start	0,000
	Wy - Rüzgar	GCS	Uniform	0,048	1.000	Length		0,000
LF2034	B2509	Wind	Y	0,048	0.000	Rela	From start	0,000
	Wy - Rüzgar	GCS	Uniform	0,048	1.000	Length		0,000
LF2035	B2510	Wind	Y	0,048	0.000	Rela	From start	0,000
	Wy - Rüzgar	GCS	Uniform	0,048	1.000	Length		0,000
LF2036	B2511	Wind	Y	0,048	0.000	Rela	From start	0,000
	Wy - Rüzgar	GCS	Uniform	0,048	1.000	Length		0,000
LF2037	B2512	Wind	Y	0,048	0.000	Rela	From start	0,000
	Wy - Rüzgar	GCS	Uniform	0,048	1.000	Length		0,000
LF2038	B2513	Wind	Y	0,048	0.000	Rela	From start	0,000
	Wy - Rüzgar	GCS	Uniform	0,048	1.000	Length		0,000
LF2039	B2514	Wind	Y	0,048	0.000	Rela	From start	0,000
	Wy - Rüzgar	GCS	Uniform	0,048	1.000	Length		0,000
LF2040	B2515	Wind	Y	0,048	0.000	Rela	From start	0,000
	Wy - Rüzgar	GCS	Uniform	0,048	1.000	Length		0,000
LF2041	B2516	Wind	Y	0,048	0.000	Rela	From start	0,000
	Wy - Rüzgar	GCS	Uniform	0,048	1.000	Length		0,000
LF2042	B2517	Wind	Y	0,048	0.000	Rela	From start	0,000
	Wy - Rüzgar	GCS	Uniform	0,048	1.000	Length		0,000

Name	Member Load case	Type System	Dir Distribution	Value - P_1 [kN/m] Value - P_2 [kN/m]	Pos x_1 Pos x_2	Coor Loc	Orig	Ecc ey Ecc ez
LF2043	PL682	Wind	Y	0,429	0.000	Rela	From start	0,000
	Wy - Rüzgar	GCS	Uniform	0,429	1.000	Length		0,000
LF2044	PL684	Wind	Y	0,429	0.000	Rela	From start	0,000
	Wy - Rüzgar	GCS	Uniform	0,429	1.000	Length		0,000
LF2045	PL686	Wind	Y	0,429	0.000	Rela	From start	0,000
	Wy - Rüzgar	GCS	Uniform	0,429	1.000	Length		0,000
LF2046	PL688	Wind	Y	0,429	0.000	Rela	From start	0,000
	Wy - Rüzgar	GCS	Uniform	0,429	1.000	Length		0,000
LF2047	PL690	Wind	Y	0,429	0.000	Rela	From start	0,000
	Wy - Rüzgar	GCS	Uniform	0,429	1.000	Length		0,000
LF2048	PL692	Wind	Y	0,429	0.000	Rela	From start	0,000
	Wy - Rüzgar	GCS	Uniform	0,429	1.000	Length		0,000
LF2049	PL694	Wind	Y	0,429	0.000	Rela	From start	0,000
	Wy - Rüzgar	GCS	Uniform	0,429	1.000	Length		0,000
LF2050	PL696	Wind	Y	0,429	0.000	Rela	From start	0,000
	Wy - Rüzgar	GCS	Uniform	0,429	1.000	Length		0,000
LF2051	PL698	Wind	Y	0,429	0.000	Rela	From start	0,000
	Wy - Rüzgar	GCS	Uniform	0,429	1.000	Length		0,000
LF2052	PL700	Wind	Y	0,429	0.000	Rela	From start	0,000
	Wy - Rüzgar	GCS	Uniform	0,429	1.000	Length		0,000
LF2053	CP284	Wind	Y	0,054	0.000	Rela	From start	0,000
	Wy - Rüzgar	GCS	Uniform	0,054	1.000	Length		0,000
LF2054	CP285	Wind	Y	0,054	0.000	Rela	From start	0,000
	Wy - Rüzgar	GCS	Uniform	0,054	1.000	Length		0,000
LF2055	CP286	Wind	Y	0,054	0.000	Rela	From start	0,000
	Wy - Rüzgar	GCS	Uniform	0,054	1.000	Length		0,000
LF2056	CP287	Wind	Y	0,054	0.000	Rela	From start	0,000
	Wy - Rüzgar	GCS	Uniform	0,054	1.000	Length		0,000
LF2057	CP288	Wind	Y	0,054	0.000	Rela	From start	0,000
	Wy - Rüzgar	GCS	Uniform	0,054	1.000	Length		0,000
LF2058	CP289	Wind	Y	0,054	0.000	Rela	From start	0,000
	Wy - Rüzgar	GCS	Uniform	0,054	1.000	Length		0,000
LF2059	B2518	Wind	Y	0,069	0.000	Rela	From start	0,000
	Wy - Rüzgar	GCS	Uniform	0,069	1.000	Length		0,000
LF2060	B2518	Wind	X	0,069	0.000	Rela	From start	0,000
	Wx - Rüzgar	GCS	Uniform	0,069	1.000	Length		0,000
LF2061	B2519	Wind	X	0,069	0.000	Rela	From start	0,000
	Wx - Rüzgar	GCS	Uniform	0,069	1.000	Length		0,000
LF2062	B2520	Wind	Y	0,069	0.000	Rela	From start	0,000
	Wy - Rüzgar	GCS	Uniform	0,069	1.000	Length		0,000
LF2063	B2522	Wind	Y	0,069	0.000	Rela	From start	0,000
	Wy - Rüzgar	GCS	Uniform	0,069	1.000	Length		0,000
LF2064	B2524	Wind	Y	0,069	0.000	Rela	From start	0,000
	Wy - Rüzgar	GCS	Uniform	0,069	1.000	Length		0,000
LF2065	B2526	Wind	Y	0,069	0.000	Rela	From start	0,000
	Wy - Rüzgar	GCS	Uniform	0,069	1.000	Length		0,000
LF2066	B2528	Wind	Y	0,069	0.000	Rela	From start	0,000
	Wy - Rüzgar	GCS	Uniform	0,069	1.000	Length		0,000
LF2067	B2530	Wind	Y	0,069	0.000	Rela	From start	0,000
	Wy - Rüzgar	GCS	Uniform	0,069	1.000	Length		0,000
LF2068	B2532	Wind	Y	0,069	0.000	Rela	From start	0,000
	Wy - Rüzgar	GCS	Uniform	0,069	1.000	Length		0,000
LF2069	B2534	Wind	X	0,057	0.000	Rela	From start	0,000
	Wx - Rüzgar	GCS	Uniform	0,057	1.000	Length		0,000
LF2070	B2542	Wind	Y	0,069	0.000	Rela	From start	0,000
	Wy - Rüzgar	GCS	Uniform	0,069	1.000	Length		0,000
LF2071	B2545	Wind	Y	0,069	0.000	Rela	From start	0,000
	Wy - Rüzgar	GCS	Uniform	0,069	1.000	Length		0,000
LF2072	B2548	Wind	Y	0,069	0.000	Rela	From start	0,000
	Wy - Rüzgar	GCS	Uniform	0,069	1.000	Length		0,000
LF2073	B2551	Wind	X	0,069	0.000	Rela	From start	0,000
	Wx - Rüzgar	GCS	Uniform	0,069	1.000	Length		0,000
LF2074	B2562	Wind	Y	0,048	0.000	Rela	From start	0,000
	Wy - Rüzgar	GCS	Uniform	0,048	1.000	Length		0,000
LF2075	B2563	Wind	Y	0,048	0.000	Rela	From start	0,000
	Wy - Rüzgar	GCS	Uniform	0,048	1.000	Length		0,000
LF2076	B2564	Wind	Y	0,048	0.000	Rela	From start	0,000
	Wy - Rüzgar	GCS	Uniform	0,048	1.000	Length		0,000
LF2077	B2565	Wind	Y	0,048	0.000	Rela	From start	0,000
	Wy - Rüzgar	GCS	Uniform	0,048	1.000	Length		0,000
LF2078	B2566	Wind	Y	0,048	0.000	Rela	From start	0,000
	Wy - Rüzgar	GCS	Uniform	0,048	1.000	Length		0,000
LF2079	B2567	Wind	Y	0,048	0.000	Rela	From start	0,000
	Wy - Rüzgar	GCS	Uniform	0,048	1.000	Length		0,000

Name	Member Load case	Type System	Dir Distribution	Value - P_1 [kN/m] Value - P_2 [kN/m]	Pos x_1 Pos x_2	Coor Loc	Orig	Ecc ey Ecc ez
LF2080	B2568	Wind	Y	0,048	0.000	Rela	From start	0,000
	Wy - Rüzgar	GCS	Uniform	0,048	1.000	Length		0,000
LF2081	B2569	Wind	Y	0,048	0.000	Rela	From start	0,000
	Wy - Rüzgar	GCS	Uniform	0,048	1.000	Length		0,000
LF2082	B2570	Wind	Y	0,048	0.000	Rela	From start	0,000
	Wy - Rüzgar	GCS	Uniform	0,048	1.000	Length		0,000
LF2083	B2571	Wind	Y	0,048	0.000	Rela	From start	0,000
	Wy - Rüzgar	GCS	Uniform	0,048	1.000	Length		0,000
LF2084	B2572	Wind	Y	0,048	0.000	Rela	From start	0,000
	Wy - Rüzgar	GCS	Uniform	0,048	1.000	Length		0,000
LF2085	B2573	Wind	Y	0,048	0.000	Rela	From start	0,000
	Wy - Rüzgar	GCS	Uniform	0,048	1.000	Length		0,000
LF2086	B2574	Wind	Y	0,048	0.000	Rela	From start	0,000
	Wy - Rüzgar	GCS	Uniform	0,048	1.000	Length		0,000
LF2087	B2575	Wind	Y	0,048	0.000	Rela	From start	0,000
	Wy - Rüzgar	GCS	Uniform	0,048	1.000	Length		0,000
LF2088	B2576	Wind	Y	0,048	0.000	Rela	From start	0,000
	Wy - Rüzgar	GCS	Uniform	0,048	1.000	Length		0,000
LF2089	B2577	Wind	Y	0,048	0.000	Rela	From start	0,000
	Wy - Rüzgar	GCS	Uniform	0,048	1.000	Length		0,000
LF2090	B2578	Wind	Y	0,048	0.000	Rela	From start	0,000
	Wy - Rüzgar	GCS	Uniform	0,048	1.000	Length		0,000
LF2091	B2579	Wind	Y	0,048	0.000	Rela	From start	0,000
	Wy - Rüzgar	GCS	Uniform	0,048	1.000	Length		0,000
LF2092	B2580	Wind	Y	0,048	0.000	Rela	From start	0,000
	Wy - Rüzgar	GCS	Uniform	0,048	1.000	Length		0,000
LF2093	B2581	Wind	Y	0,048	0.000	Rela	From start	0,000
	Wy - Rüzgar	GCS	Uniform	0,048	1.000	Length		0,000
LF2094	PL702	Wind	Y	0,429	0.000	Rela	From start	0,000
	Wy - Rüzgar	GCS	Uniform	0,429	1.000	Length		0,000
LF2095	PL704	Wind	Y	0,429	0.000	Rela	From start	0,000
	Wy - Rüzgar	GCS	Uniform	0,429	1.000	Length		0,000
LF2096	PL706	Wind	Y	0,429	0.000	Rela	From start	0,000
	Wy - Rüzgar	GCS	Uniform	0,429	1.000	Length		0,000
LF2097	PL708	Wind	Y	0,429	0.000	Rela	From start	0,000
	Wy - Rüzgar	GCS	Uniform	0,429	1.000	Length		0,000
LF2098	PL710	Wind	Y	0,429	0.000	Rela	From start	0,000
	Wy - Rüzgar	GCS	Uniform	0,429	1.000	Length		0,000
LF2099	PL712	Wind	Y	0,429	0.000	Rela	From start	0,000
	Wy - Rüzgar	GCS	Uniform	0,429	1.000	Length		0,000
LF2100	PL714	Wind	Y	0,429	0.000	Rela	From start	0,000
	Wy - Rüzgar	GCS	Uniform	0,429	1.000	Length		0,000
LF2101	PL716	Wind	Y	0,429	0.000	Rela	From start	0,000
	Wy - Rüzgar	GCS	Uniform	0,429	1.000	Length		0,000
LF2102	PL718	Wind	Y	0,429	0.000	Rela	From start	0,000
	Wy - Rüzgar	GCS	Uniform	0,429	1.000	Length		0,000
LF2103	PL720	Wind	Y	0,429	0.000	Rela	From start	0,000
	Wy - Rüzgar	GCS	Uniform	0,429	1.000	Length		0,000
LF2104	CP290	Wind	Y	0,054	0.000	Rela	From start	0,000
	Wy - Rüzgar	GCS	Uniform	0,054	1.000	Length		0,000
LF2105	CP291	Wind	Y	0,054	0.000	Rela	From start	0,000
	Wy - Rüzgar	GCS	Uniform	0,054	1.000	Length		0,000
LF2106	CP292	Wind	Y	0,054	0.000	Rela	From start	0,000
	Wy - Rüzgar	GCS	Uniform	0,054	1.000	Length		0,000
LF2107	CP293	Wind	Y	0,054	0.000	Rela	From start	0,000
	Wy - Rüzgar	GCS	Uniform	0,054	1.000	Length		0,000
LF2108	CP294	Wind	Y	0,054	0.000	Rela	From start	0,000
	Wy - Rüzgar	GCS	Uniform	0,054	1.000	Length		0,000
LF2109	CP295	Wind	Y	0,054	0.000	Rela	From start	0,000
	Wy - Rüzgar	GCS	Uniform	0,054	1.000	Length		0,000
LF2110	B2582	Wind	Y	0,069	0.000	Rela	From start	0,000
	Wy - Rüzgar	GCS	Uniform	0,069	1.000	Length		0,000
LF2111	B2582	Wind	X	0,069	0.000	Rela	From start	0,000
	Wx - Rüzgar	GCS	Uniform	0,069	1.000	Length		0,000
LF2112	B2583	Wind	X	0,069	0.000	Rela	From start	0,000
	Wx - Rüzgar	GCS	Uniform	0,069	1.000	Length		0,000
LF2113	B2584	Wind	Y	0,069	0.000	Rela	From start	0,000
	Wy - Rüzgar	GCS	Uniform	0,069	1.000	Length		0,000
LF2114	B2586	Wind	Y	0,069	0.000	Rela	From start	0,000
	Wy - Rüzgar	GCS	Uniform	0,069	1.000	Length		0,000
LF2115	B2588	Wind	Y	0,069	0.000	Rela	From start	0,000
	Wy - Rüzgar	GCS	Uniform	0,069	1.000	Length		0,000
LF2116	B2590	Wind	Y	0,069	0.000	Rela	From start	0,000
	Wy - Rüzgar	GCS	Uniform	0,069	1.000	Length		0,000

Name	Member Load case	Type System	Dir Distribution	Value - P_1 [kN/m] Value - P_2 [kN/m]	Pos x_1 Pos x_2	Coor Loc	Orig	Ecc ey Ecc ez
LF2117	B2592	Wind	Y	0,069	0.000	Rela	From start	0,000
	Wy - Rüzgar	GCS	Uniform	0,069	1.000	Length		0,000
LF2118	B2594	Wind	Y	0,069	0.000	Rela	From start	0,000
	Wy - Rüzgar	GCS	Uniform	0,069	1.000	Length		0,000
LF2119	B2596	Wind	Y	0,069	0.000	Rela	From start	0,000
	Wy - Rüzgar	GCS	Uniform	0,069	1.000	Length		0,000
LF2120	B2598	Wind	X	0,057	0.000	Rela	From start	0,000
	Wx - Rüzgar	GCS	Uniform	0,057	1.000	Length		0,000
LF2121	B2606	Wind	Y	0,069	0.000	Rela	From start	0,000
	Wy - Rüzgar	GCS	Uniform	0,069	1.000	Length		0,000
LF2122	B2609	Wind	Y	0,069	0.000	Rela	From start	0,000
	Wy - Rüzgar	GCS	Uniform	0,069	1.000	Length		0,000
LF2123	B2612	Wind	Y	0,069	0.000	Rela	From start	0,000
	Wy - Rüzgar	GCS	Uniform	0,069	1.000	Length		0,000
LF2124	B2615	Wind	X	0,069	0.000	Rela	From start	0,000
	Wx - Rüzgar	GCS	Uniform	0,069	1.000	Length		0,000
LF2125	B2626	Wind	Y	0,048	0.000	Rela	From start	0,000
	Wy - Rüzgar	GCS	Uniform	0,048	1.000	Length		0,000
LF2126	B2627	Wind	Y	0,048	0.000	Rela	From start	0,000
	Wy - Rüzgar	GCS	Uniform	0,048	1.000	Length		0,000
LF2127	B2628	Wind	Y	0,048	0.000	Rela	From start	0,000
	Wy - Rüzgar	GCS	Uniform	0,048	1.000	Length		0,000
LF2128	B2629	Wind	Y	0,048	0.000	Rela	From start	0,000
	Wy - Rüzgar	GCS	Uniform	0,048	1.000	Length		0,000
LF2129	B2630	Wind	Y	0,048	0.000	Rela	From start	0,000
	Wy - Rüzgar	GCS	Uniform	0,048	1.000	Length		0,000
LF2130	B2631	Wind	Y	0,048	0.000	Rela	From start	0,000
	Wy - Rüzgar	GCS	Uniform	0,048	1.000	Length		0,000
LF2131	B2632	Wind	Y	0,048	0.000	Rela	From start	0,000
	Wy - Rüzgar	GCS	Uniform	0,048	1.000	Length		0,000
LF2132	B2633	Wind	Y	0,048	0.000	Rela	From start	0,000
	Wy - Rüzgar	GCS	Uniform	0,048	1.000	Length		0,000
LF2133	B2634	Wind	Y	0,048	0.000	Rela	From start	0,000
	Wy - Rüzgar	GCS	Uniform	0,048	1.000	Length		0,000
LF2134	B2635	Wind	Y	0,048	0.000	Rela	From start	0,000
	Wy - Rüzgar	GCS	Uniform	0,048	1.000	Length		0,000
LF2135	B2636	Wind	Y	0,048	0.000	Rela	From start	0,000
	Wy - Rüzgar	GCS	Uniform	0,048	1.000	Length		0,000
LF2136	B2637	Wind	Y	0,048	0.000	Rela	From start	0,000
	Wy - Rüzgar	GCS	Uniform	0,048	1.000	Length		0,000
LF2137	B2638	Wind	Y	0,048	0.000	Rela	From start	0,000
	Wy - Rüzgar	GCS	Uniform	0,048	1.000	Length		0,000
LF2138	B2639	Wind	Y	0,048	0.000	Rela	From start	0,000
	Wy - Rüzgar	GCS	Uniform	0,048	1.000	Length		0,000
LF2139	B2640	Wind	Y	0,048	0.000	Rela	From start	0,000
	Wy - Rüzgar	GCS	Uniform	0,048	1.000	Length		0,000
LF2140	B2641	Wind	Y	0,048	0.000	Rela	From start	0,000
	Wy - Rüzgar	GCS	Uniform	0,048	1.000	Length		0,000
LF2141	B2642	Wind	Y	0,048	0.000	Rela	From start	0,000
	Wy - Rüzgar	GCS	Uniform	0,048	1.000	Length		0,000
LF2142	B2643	Wind	Y	0,048	0.000	Rela	From start	0,000
	Wy - Rüzgar	GCS	Uniform	0,048	1.000	Length		0,000
LF2143	B2644	Wind	Y	0,048	0.000	Rela	From start	0,000
	Wy - Rüzgar	GCS	Uniform	0,048	1.000	Length		0,000
LF2144	B2645	Wind	Y	0,048	0.000	Rela	From start	0,000
	Wy - Rüzgar	GCS	Uniform	0,048	1.000	Length		0,000
LF2145	PL722	Wind	Y	0,429	0.000	Rela	From start	0,000
	Wy - Rüzgar	GCS	Uniform	0,429	1.000	Length		0,000
LF2146	PL724	Wind	Y	0,429	0.000	Rela	From start	0,000
	Wy - Rüzgar	GCS	Uniform	0,429	1.000	Length		0,000
LF2147	PL726	Wind	Y	0,429	0.000	Rela	From start	0,000
	Wy - Rüzgar	GCS	Uniform	0,429	1.000	Length		0,000
LF2148	PL728	Wind	Y	0,429	0.000	Rela	From start	0,000
	Wy - Rüzgar	GCS	Uniform	0,429	1.000	Length		0,000
LF2149	PL730	Wind	Y	0,429	0.000	Rela	From start	0,000
	Wy - Rüzgar	GCS	Uniform	0,429	1.000	Length		0,000
LF2150	PL732	Wind	Y	0,429	0.000	Rela	From start	0,000
	Wy - Rüzgar	GCS	Uniform	0,429	1.000	Length		0,000
LF2151	PL734	Wind	Y	0,429	0.000	Rela	From start	0,000
	Wy - Rüzgar	GCS	Uniform	0,429	1.000	Length		0,000
LF2152	PL736	Wind	Y	0,429	0.000	Rela	From start	0,000
	Wy - Rüzgar	GCS	Uniform	0,429	1.000	Length		0,000
LF2153	PL738	Wind	Y	0,429	0.000	Rela	From start	0,000
	Wy - Rüzgar	GCS	Uniform	0,429	1.000	Length		0,000

Name	Member Load case	Type System	Dir Distribution	Value - P_1 [kN/m] Value - P_2 [kN/m]	Pos x_1 Pos x_2	Coor Loc	Orig	Ecc ey Ecc ez
LF2154	PL740	Wind	Y	0,429	0.000	Rela	From start	0,000
	Wy - Rüzgar	GCS	Uniform	0,429	1.000	Length		0,000
LF2155	CP296	Wind	Y	0,054	0.000	Rela	From start	0,000
	Wy - Rüzgar	GCS	Uniform	0,054	1.000	Length		0,000
LF2156	CP297	Wind	Y	0,054	0.000	Rela	From start	0,000
	Wy - Rüzgar	GCS	Uniform	0,054	1.000	Length		0,000
LF2157	CP298	Wind	Y	0,054	0.000	Rela	From start	0,000
	Wy - Rüzgar	GCS	Uniform	0,054	1.000	Length		0,000
LF2158	CP299	Wind	Y	0,054	0.000	Rela	From start	0,000
	Wy - Rüzgar	GCS	Uniform	0,054	1.000	Length		0,000
LF2159	CP300	Wind	Y	0,054	0.000	Rela	From start	0,000
	Wy - Rüzgar	GCS	Uniform	0,054	1.000	Length		0,000
LF2160	CP301	Wind	Y	0,054	0.000	Rela	From start	0,000
	Wy - Rüzgar	GCS	Uniform	0,054	1.000	Length		0,000
LF2161	B2646	Wind	Y	0,069	0.000	Rela	From start	0,000
	Wy - Rüzgar	GCS	Uniform	0,069	1.000	Length		0,000
LF2162	B2646	Wind	X	0,069	0.000	Rela	From start	0,000
	Wx - Rüzgar	GCS	Uniform	0,069	1.000	Length		0,000
LF2163	B2647	Wind	X	0,069	0.000	Rela	From start	0,000
	Wx - Rüzgar	GCS	Uniform	0,069	1.000	Length		0,000
LF2164	B2648	Wind	Y	0,069	0.000	Rela	From start	0,000
	Wy - Rüzgar	GCS	Uniform	0,069	1.000	Length		0,000
LF2165	B2650	Wind	Y	0,069	0.000	Rela	From start	0,000
	Wy - Rüzgar	GCS	Uniform	0,069	1.000	Length		0,000
LF2166	B2652	Wind	Y	0,069	0.000	Rela	From start	0,000
	Wy - Rüzgar	GCS	Uniform	0,069	1.000	Length		0,000
LF2167	B2654	Wind	Y	0,069	0.000	Rela	From start	0,000
	Wy - Rüzgar	GCS	Uniform	0,069	1.000	Length		0,000
LF2168	B2656	Wind	Y	0,069	0.000	Rela	From start	0,000
	Wy - Rüzgar	GCS	Uniform	0,069	1.000	Length		0,000
LF2169	B2658	Wind	Y	0,069	0.000	Rela	From start	0,000
	Wy - Rüzgar	GCS	Uniform	0,069	1.000	Length		0,000
LF2170	B2660	Wind	Y	0,069	0.000	Rela	From start	0,000
	Wy - Rüzgar	GCS	Uniform	0,069	1.000	Length		0,000
LF2171	B2662	Wind	X	0,057	0.000	Rela	From start	0,000
	Wx - Rüzgar	GCS	Uniform	0,057	1.000	Length		0,000
LF2172	B2670	Wind	Y	0,069	0.000	Rela	From start	0,000
	Wy - Rüzgar	GCS	Uniform	0,069	1.000	Length		0,000
LF2173	B2673	Wind	Y	0,069	0.000	Rela	From start	0,000
	Wy - Rüzgar	GCS	Uniform	0,069	1.000	Length		0,000
LF2174	B2676	Wind	Y	0,069	0.000	Rela	From start	0,000
	Wy - Rüzgar	GCS	Uniform	0,069	1.000	Length		0,000
LF2175	B2679	Wind	X	0,069	0.000	Rela	From start	0,000
	Wx - Rüzgar	GCS	Uniform	0,069	1.000	Length		0,000
LF2176	B2690	Wind	Y	0,048	0.000	Rela	From start	0,000
	Wy - Rüzgar	GCS	Uniform	0,048	1.000	Length		0,000
LF2177	B2691	Wind	Y	0,048	0.000	Rela	From start	0,000
	Wy - Rüzgar	GCS	Uniform	0,048	1.000	Length		0,000
LF2178	B2692	Wind	Y	0,048	0.000	Rela	From start	0,000
	Wy - Rüzgar	GCS	Uniform	0,048	1.000	Length		0,000
LF2179	B2693	Wind	Y	0,048	0.000	Rela	From start	0,000
	Wy - Rüzgar	GCS	Uniform	0,048	1.000	Length		0,000
LF2180	B2694	Wind	Y	0,048	0.000	Rela	From start	0,000
	Wy - Rüzgar	GCS	Uniform	0,048	1.000	Length		0,000
LF2181	B2695	Wind	Y	0,048	0.000	Rela	From start	0,000
	Wy - Rüzgar	GCS	Uniform	0,048	1.000	Length		0,000
LF2182	B2696	Wind	Y	0,048	0.000	Rela	From start	0,000
	Wy - Rüzgar	GCS	Uniform	0,048	1.000	Length		0,000
LF2183	B2697	Wind	Y	0,048	0.000	Rela	From start	0,000
	Wy - Rüzgar	GCS	Uniform	0,048	1.000	Length		0,000
LF2184	B2698	Wind	Y	0,048	0.000	Rela	From start	0,000
	Wy - Rüzgar	GCS	Uniform	0,048	1.000	Length		0,000
LF2185	B2699	Wind	Y	0,048	0.000	Rela	From start	0,000
	Wy - Rüzgar	GCS	Uniform	0,048	1.000	Length		0,000
LF2186	B2700	Wind	Y	0,048	0.000	Rela	From start	0,000
	Wy - Rüzgar	GCS	Uniform	0,048	1.000	Length		0,000
LF2187	B2701	Wind	Y	0,048	0.000	Rela	From start	0,000
	Wy - Rüzgar	GCS	Uniform	0,048	1.000	Length		0,000
LF2188	B2702	Wind	Y	0,048	0.000	Rela	From start	0,000
	Wy - Rüzgar	GCS	Uniform	0,048	1.000	Length		0,000
LF2189	B2703	Wind	Y	0,048	0.000	Rela	From start	0,000
	Wy - Rüzgar	GCS	Uniform	0,048	1.000	Length		0,000
LF2190	B2704	Wind	Y	0,048	0.000	Rela	From start	0,000
	Wy - Rüzgar	GCS	Uniform	0,048	1.000	Length		0,000

Name	Member Load case	Type System	Dir Distribution	Value - P_1 [kN/m] Value - P_2 [kN/m]	Pos x_1 Pos x_2	Coor Loc	Orig	Ecc ey Ecc ez
LF2191	B2705	Wind	Y	0,048	0.000	Rela	From start	0,000
	Wy - Rüzgar	GCS	Uniform	0,048	1.000	Length		0,000
LF2192	B2706	Wind	Y	0,048	0.000	Rela	From start	0,000
	Wy - Rüzgar	GCS	Uniform	0,048	1.000	Length		0,000
LF2193	B2707	Wind	Y	0,048	0.000	Rela	From start	0,000
	Wy - Rüzgar	GCS	Uniform	0,048	1.000	Length		0,000
LF2194	B2708	Wind	Y	0,048	0.000	Rela	From start	0,000
	Wy - Rüzgar	GCS	Uniform	0,048	1.000	Length		0,000
LF2195	B2709	Wind	Y	0,048	0.000	Rela	From start	0,000
	Wy - Rüzgar	GCS	Uniform	0,048	1.000	Length		0,000
LF2196	PL742	Wind	Y	0,429	0.000	Rela	From start	0,000
	Wy - Rüzgar	GCS	Uniform	0,429	1.000	Length		0,000
LF2197	PL744	Wind	Y	0,429	0.000	Rela	From start	0,000
	Wy - Rüzgar	GCS	Uniform	0,429	1.000	Length		0,000
LF2198	PL746	Wind	Y	0,429	0.000	Rela	From start	0,000
	Wy - Rüzgar	GCS	Uniform	0,429	1.000	Length		0,000
LF2199	PL748	Wind	Y	0,429	0.000	Rela	From start	0,000
	Wy - Rüzgar	GCS	Uniform	0,429	1.000	Length		0,000
LF2200	PL750	Wind	Y	0,429	0.000	Rela	From start	0,000
	Wy - Rüzgar	GCS	Uniform	0,429	1.000	Length		0,000
LF2201	PL752	Wind	Y	0,429	0.000	Rela	From start	0,000
	Wy - Rüzgar	GCS	Uniform	0,429	1.000	Length		0,000
LF2202	PL754	Wind	Y	0,429	0.000	Rela	From start	0,000
	Wy - Rüzgar	GCS	Uniform	0,429	1.000	Length		0,000
LF2203	PL756	Wind	Y	0,429	0.000	Rela	From start	0,000
	Wy - Rüzgar	GCS	Uniform	0,429	1.000	Length		0,000
LF2204	PL758	Wind	Y	0,429	0.000	Rela	From start	0,000
	Wy - Rüzgar	GCS	Uniform	0,429	1.000	Length		0,000
LF2205	PL760	Wind	Y	0,429	0.000	Rela	From start	0,000
	Wy - Rüzgar	GCS	Uniform	0,429	1.000	Length		0,000
LF2206	CP302	Wind	Y	0,054	0.000	Rela	From start	0,000
	Wy - Rüzgar	GCS	Uniform	0,054	1.000	Length		0,000
LF2207	CP303	Wind	Y	0,054	0.000	Rela	From start	0,000
	Wy - Rüzgar	GCS	Uniform	0,054	1.000	Length		0,000
LF2208	CP304	Wind	Y	0,054	0.000	Rela	From start	0,000
	Wy - Rüzgar	GCS	Uniform	0,054	1.000	Length		0,000
LF2209	CP305	Wind	Y	0,054	0.000	Rela	From start	0,000
	Wy - Rüzgar	GCS	Uniform	0,054	1.000	Length		0,000
LF2210	CP306	Wind	Y	0,054	0.000	Rela	From start	0,000
	Wy - Rüzgar	GCS	Uniform	0,054	1.000	Length		0,000
LF2211	CP307	Wind	Y	0,054	0.000	Rela	From start	0,000
	Wy - Rüzgar	GCS	Uniform	0,054	1.000	Length		0,000
LF2212	B2710	Wind	Y	0,069	0.000	Rela	From start	0,000
	Wy - Rüzgar	GCS	Uniform	0,069	1.000	Length		0,000
LF2213	B2710	Wind	X	0,069	0.000	Rela	From start	0,000
	Wx - Rüzgar	GCS	Uniform	0,069	1.000	Length		0,000
LF2214	B2711	Wind	X	0,069	0.000	Rela	From start	0,000
	Wx - Rüzgar	GCS	Uniform	0,069	1.000	Length		0,000
LF2215	B2712	Wind	Y	0,069	0.000	Rela	From start	0,000
	Wy - Rüzgar	GCS	Uniform	0,069	1.000	Length		0,000
LF2216	B2714	Wind	Y	0,069	0.000	Rela	From start	0,000
	Wy - Rüzgar	GCS	Uniform	0,069	1.000	Length		0,000
LF2217	B2716	Wind	Y	0,069	0.000	Rela	From start	0,000
	Wy - Rüzgar	GCS	Uniform	0,069	1.000	Length		0,000
LF2218	B2718	Wind	Y	0,069	0.000	Rela	From start	0,000
	Wy - Rüzgar	GCS	Uniform	0,069	1.000	Length		0,000
LF2219	B2720	Wind	Y	0,069	0.000	Rela	From start	0,000
	Wy - Rüzgar	GCS	Uniform	0,069	1.000	Length		0,000
LF2220	B2722	Wind	Y	0,069	0.000	Rela	From start	0,000
	Wy - Rüzgar	GCS	Uniform	0,069	1.000	Length		0,000
LF2221	B2724	Wind	Y	0,069	0.000	Rela	From start	0,000
	Wy - Rüzgar	GCS	Uniform	0,069	1.000	Length		0,000
LF2222	B2726	Wind	X	0,057	0.000	Rela	From start	0,000
	Wx - Rüzgar	GCS	Uniform	0,057	1.000	Length		0,000
LF2223	B2734	Wind	Y	0,069	0.000	Rela	From start	0,000
	Wy - Rüzgar	GCS	Uniform	0,069	1.000	Length		0,000
LF2224	B2737	Wind	Y	0,069	0.000	Rela	From start	0,000
	Wy - Rüzgar	GCS	Uniform	0,069	1.000	Length		0,000
LF2225	B2740	Wind	Y	0,069	0.000	Rela	From start	0,000
	Wy - Rüzgar	GCS	Uniform	0,069	1.000	Length		0,000
LF2226	B2743	Wind	X	0,069	0.000	Rela	From start	0,000
	Wx - Rüzgar	GCS	Uniform	0,069	1.000	Length		0,000
LF2227	B2754	Wind	Y	0,048	0.000	Rela	From start	0,000
	Wy - Rüzgar	GCS	Uniform	0,048	1.000	Length		0,000

Name	Member Load case	Type System	Dir Distribution	Value - P_1 [kN/m] Value - P_2 [kN/m]	Pos x_1 Pos x_2	Coor Loc	Orig	Ecc ey Ecc ez
LF2228	B2755	Wind	Y	0,048	0.000	Rela	From start	0,000
	Wy - Rüzgar	GCS	Uniform	0,048	1.000	Length		0,000
LF2229	B2756	Wind	Y	0,048	0.000	Rela	From start	0,000
	Wy - Rüzgar	GCS	Uniform	0,048	1.000	Length		0,000
LF2230	B2757	Wind	Y	0,048	0.000	Rela	From start	0,000
	Wy - Rüzgar	GCS	Uniform	0,048	1.000	Length		0,000
LF2231	B2758	Wind	Y	0,048	0.000	Rela	From start	0,000
	Wy - Rüzgar	GCS	Uniform	0,048	1.000	Length		0,000
LF2232	B2759	Wind	Y	0,048	0.000	Rela	From start	0,000
	Wy - Rüzgar	GCS	Uniform	0,048	1.000	Length		0,000
LF2233	B2760	Wind	Y	0,048	0.000	Rela	From start	0,000
	Wy - Rüzgar	GCS	Uniform	0,048	1.000	Length		0,000
LF2234	B2761	Wind	Y	0,048	0.000	Rela	From start	0,000
	Wy - Rüzgar	GCS	Uniform	0,048	1.000	Length		0,000
LF2235	B2762	Wind	Y	0,048	0.000	Rela	From start	0,000
	Wy - Rüzgar	GCS	Uniform	0,048	1.000	Length		0,000
LF2236	B2763	Wind	Y	0,048	0.000	Rela	From start	0,000
	Wy - Rüzgar	GCS	Uniform	0,048	1.000	Length		0,000
LF2237	B2764	Wind	Y	0,048	0.000	Rela	From start	0,000
	Wy - Rüzgar	GCS	Uniform	0,048	1.000	Length		0,000
LF2238	B2765	Wind	Y	0,048	0.000	Rela	From start	0,000
	Wy - Rüzgar	GCS	Uniform	0,048	1.000	Length		0,000
LF2239	B2766	Wind	Y	0,048	0.000	Rela	From start	0,000
	Wy - Rüzgar	GCS	Uniform	0,048	1.000	Length		0,000
LF2240	B2767	Wind	Y	0,048	0.000	Rela	From start	0,000
	Wy - Rüzgar	GCS	Uniform	0,048	1.000	Length		0,000
LF2241	B2768	Wind	Y	0,048	0.000	Rela	From start	0,000
	Wy - Rüzgar	GCS	Uniform	0,048	1.000	Length		0,000
LF2242	B2769	Wind	Y	0,048	0.000	Rela	From start	0,000
	Wy - Rüzgar	GCS	Uniform	0,048	1.000	Length		0,000
LF2243	B2770	Wind	Y	0,048	0.000	Rela	From start	0,000
	Wy - Rüzgar	GCS	Uniform	0,048	1.000	Length		0,000
LF2244	B2771	Wind	Y	0,048	0.000	Rela	From start	0,000
	Wy - Rüzgar	GCS	Uniform	0,048	1.000	Length		0,000
LF2245	B2772	Wind	Y	0,048	0.000	Rela	From start	0,000
	Wy - Rüzgar	GCS	Uniform	0,048	1.000	Length		0,000
LF2246	B2773	Wind	Y	0,048	0.000	Rela	From start	0,000
	Wy - Rüzgar	GCS	Uniform	0,048	1.000	Length		0,000
LF2247	PL762	Wind	Y	0,429	0.000	Rela	From start	0,000
	Wy - Rüzgar	GCS	Uniform	0,429	1.000	Length		0,000
LF2248	PL764	Wind	Y	0,429	0.000	Rela	From start	0,000
	Wy - Rüzgar	GCS	Uniform	0,429	1.000	Length		0,000
LF2249	PL766	Wind	Y	0,429	0.000	Rela	From start	0,000
	Wy - Rüzgar	GCS	Uniform	0,429	1.000	Length		0,000
LF2250	PL768	Wind	Y	0,429	0.000	Rela	From start	0,000
	Wy - Rüzgar	GCS	Uniform	0,429	1.000	Length		0,000
LF2251	PL770	Wind	Y	0,429	0.000	Rela	From start	0,000
	Wy - Rüzgar	GCS	Uniform	0,429	1.000	Length		0,000
LF2252	PL772	Wind	Y	0,429	0.000	Rela	From start	0,000
	Wy - Rüzgar	GCS	Uniform	0,429	1.000	Length		0,000
LF2253	PL774	Wind	Y	0,429	0.000	Rela	From start	0,000
	Wy - Rüzgar	GCS	Uniform	0,429	1.000	Length		0,000
LF2254	PL776	Wind	Y	0,429	0.000	Rela	From start	0,000
	Wy - Rüzgar	GCS	Uniform	0,429	1.000	Length		0,000
LF2255	PL778	Wind	Y	0,429	0.000	Rela	From start	0,000
	Wy - Rüzgar	GCS	Uniform	0,429	1.000	Length		0,000
LF2256	PL780	Wind	Y	0,429	0.000	Rela	From start	0,000
	Wy - Rüzgar	GCS	Uniform	0,429	1.000	Length		0,000
LF2257	CP308	Wind	Y	0,054	0.000	Rela	From start	0,000
	Wy - Rüzgar	GCS	Uniform	0,054	1.000	Length		0,000
LF2258	CP309	Wind	Y	0,054	0.000	Rela	From start	0,000
	Wy - Rüzgar	GCS	Uniform	0,054	1.000	Length		0,000
LF2259	CP310	Wind	Y	0,054	0.000	Rela	From start	0,000
	Wy - Rüzgar	GCS	Uniform	0,054	1.000	Length		0,000
LF2260	CP311	Wind	Y	0,054	0.000	Rela	From start	0,000
	Wy - Rüzgar	GCS	Uniform	0,054	1.000	Length		0,000
LF2261	CP312	Wind	Y	0,054	0.000	Rela	From start	0,000
	Wy - Rüzgar	GCS	Uniform	0,054	1.000	Length		0,000
LF2262	CP313	Wind	Y	0,054	0.000	Rela	From start	0,000
	Wy - Rüzgar	GCS	Uniform	0,054	1.000	Length		0,000
LF2263	B2774	Wind	Y	0,069	0.000	Rela	From start	0,000
	Wy - Rüzgar	GCS	Uniform	0,069	1.000	Length		0,000
LF2264	B2774	Wind	X	0,069	0.000	Rela	From start	0,000
	Wx - Rüzgar	GCS	Uniform	0,069	1.000	Length		0,000

Name	Member Load case	Type System	Dir Distribution	Value - P_1 [kN/m] Value - P_2 [kN/m]	Pos x_1 Pos x_2	Coor Loc	Orig	Ecc ey Ecc ez
LF2265	B2775	Wind	X	0,069	0.000	Rela	From start	0,000
	Wx - Rüzgar	GCS	Uniform	0,069	1.000	Length		0,000
LF2266	B2776	Wind	Y	0,069	0.000	Rela	From start	0,000
	Wy - Rüzgar	GCS	Uniform	0,069	1.000	Length		0,000
LF2267	B2778	Wind	Y	0,069	0.000	Rela	From start	0,000
	Wy - Rüzgar	GCS	Uniform	0,069	1.000	Length		0,000
LF2268	B2780	Wind	Y	0,069	0.000	Rela	From start	0,000
	Wy - Rüzgar	GCS	Uniform	0,069	1.000	Length		0,000
LF2269	B2782	Wind	Y	0,069	0.000	Rela	From start	0,000
	Wy - Rüzgar	GCS	Uniform	0,069	1.000	Length		0,000
LF2270	B2784	Wind	Y	0,069	0.000	Rela	From start	0,000
	Wy - Rüzgar	GCS	Uniform	0,069	1.000	Length		0,000
LF2271	B2786	Wind	Y	0,069	0.000	Rela	From start	0,000
	Wy - Rüzgar	GCS	Uniform	0,069	1.000	Length		0,000
LF2272	B2788	Wind	Y	0,069	0.000	Rela	From start	0,000
	Wy - Rüzgar	GCS	Uniform	0,069	1.000	Length		0,000
LF2273	B2790	Wind	X	0,057	0.000	Rela	From start	0,000
	Wx - Rüzgar	GCS	Uniform	0,057	1.000	Length		0,000
LF2274	B2798	Wind	Y	0,069	0.000	Rela	From start	0,000
	Wy - Rüzgar	GCS	Uniform	0,069	1.000	Length		0,000
LF2275	B2801	Wind	Y	0,069	0.000	Rela	From start	0,000
	Wy - Rüzgar	GCS	Uniform	0,069	1.000	Length		0,000
LF2276	B2804	Wind	Y	0,069	0.000	Rela	From start	0,000
	Wy - Rüzgar	GCS	Uniform	0,069	1.000	Length		0,000
LF2277	B2807	Wind	X	0,069	0.000	Rela	From start	0,000
	Wx - Rüzgar	GCS	Uniform	0,069	1.000	Length		0,000
LF2278	B2818	Wind	Y	0,048	0.000	Rela	From start	0,000
	Wy - Rüzgar	GCS	Uniform	0,048	1.000	Length		0,000
LF2279	B2819	Wind	Y	0,048	0.000	Rela	From start	0,000
	Wy - Rüzgar	GCS	Uniform	0,048	1.000	Length		0,000
LF2280	B2820	Wind	Y	0,048	0.000	Rela	From start	0,000
	Wy - Rüzgar	GCS	Uniform	0,048	1.000	Length		0,000
LF2281	B2821	Wind	Y	0,048	0.000	Rela	From start	0,000
	Wy - Rüzgar	GCS	Uniform	0,048	1.000	Length		0,000
LF2282	B2822	Wind	Y	0,048	0.000	Rela	From start	0,000
	Wy - Rüzgar	GCS	Uniform	0,048	1.000	Length		0,000
LF2283	B2823	Wind	Y	0,048	0.000	Rela	From start	0,000
	Wy - Rüzgar	GCS	Uniform	0,048	1.000	Length		0,000
LF2284	B2824	Wind	Y	0,048	0.000	Rela	From start	0,000
	Wy - Rüzgar	GCS	Uniform	0,048	1.000	Length		0,000
LF2285	B2825	Wind	Y	0,048	0.000	Rela	From start	0,000
	Wy - Rüzgar	GCS	Uniform	0,048	1.000	Length		0,000
LF2286	B2826	Wind	Y	0,048	0.000	Rela	From start	0,000
	Wy - Rüzgar	GCS	Uniform	0,048	1.000	Length		0,000
LF2287	B2827	Wind	Y	0,048	0.000	Rela	From start	0,000
	Wy - Rüzgar	GCS	Uniform	0,048	1.000	Length		0,000
LF2288	B2828	Wind	Y	0,048	0.000	Rela	From start	0,000
	Wy - Rüzgar	GCS	Uniform	0,048	1.000	Length		0,000
LF2289	B2829	Wind	Y	0,048	0.000	Rela	From start	0,000
	Wy - Rüzgar	GCS	Uniform	0,048	1.000	Length		0,000
LF2290	B2830	Wind	Y	0,048	0.000	Rela	From start	0,000
	Wy - Rüzgar	GCS	Uniform	0,048	1.000	Length		0,000
LF2291	B2831	Wind	Y	0,048	0.000	Rela	From start	0,000
	Wy - Rüzgar	GCS	Uniform	0,048	1.000	Length		0,000
LF2292	B2832	Wind	Y	0,048	0.000	Rela	From start	0,000
	Wy - Rüzgar	GCS	Uniform	0,048	1.000	Length		0,000
LF2293	B2833	Wind	Y	0,048	0.000	Rela	From start	0,000
	Wy - Rüzgar	GCS	Uniform	0,048	1.000	Length		0,000
LF2294	B2834	Wind	Y	0,048	0.000	Rela	From start	0,000
	Wy - Rüzgar	GCS	Uniform	0,048	1.000	Length		0,000
LF2295	B2835	Wind	Y	0,048	0.000	Rela	From start	0,000
	Wy - Rüzgar	GCS	Uniform	0,048	1.000	Length		0,000
LF2296	B2836	Wind	Y	0,048	0.000	Rela	From start	0,000
	Wy - Rüzgar	GCS	Uniform	0,048	1.000	Length		0,000
LF2297	B2837	Wind	Y	0,048	0.000	Rela	From start	0,000
	Wy - Rüzgar	GCS	Uniform	0,048	1.000	Length		0,000
LF2298	PL782	Wind	Y	0,429	0.000	Rela	From start	0,000
	Wy - Rüzgar	GCS	Uniform	0,429	1.000	Length		0,000
LF2299	PL784	Wind	Y	0,429	0.000	Rela	From start	0,000
	Wy - Rüzgar	GCS	Uniform	0,429	1.000	Length		0,000
LF2300	PL786	Wind	Y	0,429	0.000	Rela	From start	0,000
	Wy - Rüzgar	GCS	Uniform	0,429	1.000	Length		0,000
LF2301	PL788	Wind	Y	0,429	0.000	Rela	From start	0,000
	Wy - Rüzgar	GCS	Uniform	0,429	1.000	Length		0,000

Name	Member Load case	Type System	Dir Distribution	Value - P_1 [kN/m] Value - P_2 [kN/m]	Pos x_1 Pos x_2	Coor Loc	Orig	Ecc ey Ecc ez
LF2302	PL790	Wind	Y	0,429	0.000	Rela	From start	0,000
	Wy - Rüzgar	GCS	Uniform	0,429	1.000	Length		0,000
LF2303	PL792	Wind	Y	0,429	0.000	Rela	From start	0,000
	Wy - Rüzgar	GCS	Uniform	0,429	1.000	Length		0,000
LF2304	PL794	Wind	Y	0,429	0.000	Rela	From start	0,000
	Wy - Rüzgar	GCS	Uniform	0,429	1.000	Length		0,000
LF2305	PL796	Wind	Y	0,429	0.000	Rela	From start	0,000
	Wy - Rüzgar	GCS	Uniform	0,429	1.000	Length		0,000
LF2306	PL798	Wind	Y	0,429	0.000	Rela	From start	0,000
	Wy - Rüzgar	GCS	Uniform	0,429	1.000	Length		0,000
LF2307	PL800	Wind	Y	0,429	0.000	Rela	From start	0,000
	Wy - Rüzgar	GCS	Uniform	0,429	1.000	Length		0,000
LF2308	CP314	Wind	Y	0,054	0.000	Rela	From start	0,000
	Wy - Rüzgar	GCS	Uniform	0,054	1.000	Length		0,000
LF2309	CP315	Wind	Y	0,054	0.000	Rela	From start	0,000
	Wy - Rüzgar	GCS	Uniform	0,054	1.000	Length		0,000
LF2310	CP316	Wind	Y	0,054	0.000	Rela	From start	0,000
	Wy - Rüzgar	GCS	Uniform	0,054	1.000	Length		0,000
LF2311	CP317	Wind	Y	0,054	0.000	Rela	From start	0,000
	Wy - Rüzgar	GCS	Uniform	0,054	1.000	Length		0,000
LF2312	CP318	Wind	Y	0,054	0.000	Rela	From start	0,000
	Wy - Rüzgar	GCS	Uniform	0,054	1.000	Length		0,000
LF2313	CP319	Wind	Y	0,054	0.000	Rela	From start	0,000
	Wy - Rüzgar	GCS	Uniform	0,054	1.000	Length		0,000
LF2314	B2838	Wind	Y	0,069	0.000	Rela	From start	0,000
	Wy - Rüzgar	GCS	Uniform	0,069	1.000	Length		0,000
LF2315	B2838	Wind	X	0,069	0.000	Rela	From start	0,000
	Wx - Rüzgar	GCS	Uniform	0,069	1.000	Length		0,000
LF2316	B2839	Wind	X	0,069	0.000	Rela	From start	0,000
	Wx - Rüzgar	GCS	Uniform	0,069	1.000	Length		0,000
LF2317	B2840	Wind	Y	0,069	0.000	Rela	From start	0,000
	Wy - Rüzgar	GCS	Uniform	0,069	1.000	Length		0,000
LF2318	B2842	Wind	Y	0,069	0.000	Rela	From start	0,000
	Wy - Rüzgar	GCS	Uniform	0,069	1.000	Length		0,000
LF2319	B2844	Wind	Y	0,069	0.000	Rela	From start	0,000
	Wy - Rüzgar	GCS	Uniform	0,069	1.000	Length		0,000
LF2320	B2846	Wind	Y	0,069	0.000	Rela	From start	0,000
	Wy - Rüzgar	GCS	Uniform	0,069	1.000	Length		0,000
LF2321	B2848	Wind	Y	0,069	0.000	Rela	From start	0,000
	Wy - Rüzgar	GCS	Uniform	0,069	1.000	Length		0,000
LF2322	B2850	Wind	Y	0,069	0.000	Rela	From start	0,000
	Wy - Rüzgar	GCS	Uniform	0,069	1.000	Length		0,000
LF2323	B2852	Wind	Y	0,069	0.000	Rela	From start	0,000
	Wy - Rüzgar	GCS	Uniform	0,069	1.000	Length		0,000
LF2324	B2854	Wind	X	0,057	0.000	Rela	From start	0,000
	Wx - Rüzgar	GCS	Uniform	0,057	1.000	Length		0,000
LF2325	B2862	Wind	Y	0,069	0.000	Rela	From start	0,000
	Wy - Rüzgar	GCS	Uniform	0,069	1.000	Length		0,000
LF2326	B2865	Wind	Y	0,069	0.000	Rela	From start	0,000
	Wy - Rüzgar	GCS	Uniform	0,069	1.000	Length		0,000
LF2327	B2868	Wind	Y	0,069	0.000	Rela	From start	0,000
	Wy - Rüzgar	GCS	Uniform	0,069	1.000	Length		0,000
LF2328	B2871	Wind	X	0,069	0.000	Rela	From start	0,000
	Wx - Rüzgar	GCS	Uniform	0,069	1.000	Length		0,000
LF2329	B2882	Wind	Y	0,048	0.000	Rela	From start	0,000
	Wy - Rüzgar	GCS	Uniform	0,048	1.000	Length		0,000
LF2330	B2883	Wind	Y	0,048	0.000	Rela	From start	0,000
	Wy - Rüzgar	GCS	Uniform	0,048	1.000	Length		0,000
LF2331	B2884	Wind	Y	0,048	0.000	Rela	From start	0,000
	Wy - Rüzgar	GCS	Uniform	0,048	1.000	Length		0,000
LF2332	B2885	Wind	Y	0,048	0.000	Rela	From start	0,000
	Wy - Rüzgar	GCS	Uniform	0,048	1.000	Length		0,000
LF2333	B2886	Wind	Y	0,048	0.000	Rela	From start	0,000
	Wy - Rüzgar	GCS	Uniform	0,048	1.000	Length		0,000
LF2334	B2887	Wind	Y	0,048	0.000	Rela	From start	0,000
	Wy - Rüzgar	GCS	Uniform	0,048	1.000	Length		0,000
LF2335	B2888	Wind	Y	0,048	0.000	Rela	From start	0,000
	Wy - Rüzgar	GCS	Uniform	0,048	1.000	Length		0,000
LF2336	B2889	Wind	Y	0,048	0.000	Rela	From start	0,000
	Wy - Rüzgar	GCS	Uniform	0,048	1.000	Length		0,000
LF2337	B2890	Wind	Y	0,048	0.000	Rela	From start	0,000
	Wy - Rüzgar	GCS	Uniform	0,048	1.000	Length		0,000
LF2338	B2891	Wind	Y	0,048	0.000	Rela	From start	0,000
	Wy - Rüzgar	GCS	Uniform	0,048	1.000	Length		0,000

Name	Member Load case	Type System	Dir Distribution	Value - P_1 [kN/m] Value - P_2 [kN/m]	Pos x_1 Pos x_2	Coor Loc	Orig	Ecc ey Ecc ez
LF2339	B2892	Wind	Y	0,048	0.000	Rela	From start	0,000
	Wy - Rüzgar	GCS	Uniform	0,048	1.000	Length		0,000
LF2340	B2893	Wind	Y	0,048	0.000	Rela	From start	0,000
	Wy - Rüzgar	GCS	Uniform	0,048	1.000	Length		0,000
LF2341	B2894	Wind	Y	0,048	0.000	Rela	From start	0,000
	Wy - Rüzgar	GCS	Uniform	0,048	1.000	Length		0,000
LF2342	B2895	Wind	Y	0,048	0.000	Rela	From start	0,000
	Wy - Rüzgar	GCS	Uniform	0,048	1.000	Length		0,000
LF2343	B2896	Wind	Y	0,048	0.000	Rela	From start	0,000
	Wy - Rüzgar	GCS	Uniform	0,048	1.000	Length		0,000
LF2344	B2897	Wind	Y	0,048	0.000	Rela	From start	0,000
	Wy - Rüzgar	GCS	Uniform	0,048	1.000	Length		0,000
LF2345	B2898	Wind	Y	0,048	0.000	Rela	From start	0,000
	Wy - Rüzgar	GCS	Uniform	0,048	1.000	Length		0,000
LF2346	B2899	Wind	Y	0,048	0.000	Rela	From start	0,000
	Wy - Rüzgar	GCS	Uniform	0,048	1.000	Length		0,000
LF2347	B2900	Wind	Y	0,048	0.000	Rela	From start	0,000
	Wy - Rüzgar	GCS	Uniform	0,048	1.000	Length		0,000
LF2348	B2901	Wind	Y	0,048	0.000	Rela	From start	0,000
	Wy - Rüzgar	GCS	Uniform	0,048	1.000	Length		0,000
LF2349	PL802	Wind	Y	0,429	0.000	Rela	From start	0,000
	Wy - Rüzgar	GCS	Uniform	0,429	1.000	Length		0,000
LF2350	PL804	Wind	Y	0,429	0.000	Rela	From start	0,000
	Wy - Rüzgar	GCS	Uniform	0,429	1.000	Length		0,000
LF2351	PL806	Wind	Y	0,429	0.000	Rela	From start	0,000
	Wy - Rüzgar	GCS	Uniform	0,429	1.000	Length		0,000
LF2352	PL808	Wind	Y	0,429	0.000	Rela	From start	0,000
	Wy - Rüzgar	GCS	Uniform	0,429	1.000	Length		0,000
LF2353	PL810	Wind	Y	0,429	0.000	Rela	From start	0,000
	Wy - Rüzgar	GCS	Uniform	0,429	1.000	Length		0,000
LF2354	PL812	Wind	Y	0,429	0.000	Rela	From start	0,000
	Wy - Rüzgar	GCS	Uniform	0,429	1.000	Length		0,000
LF2355	PL814	Wind	Y	0,429	0.000	Rela	From start	0,000
	Wy - Rüzgar	GCS	Uniform	0,429	1.000	Length		0,000
LF2356	PL816	Wind	Y	0,429	0.000	Rela	From start	0,000
	Wy - Rüzgar	GCS	Uniform	0,429	1.000	Length		0,000
LF2357	PL818	Wind	Y	0,429	0.000	Rela	From start	0,000
	Wy - Rüzgar	GCS	Uniform	0,429	1.000	Length		0,000
LF2358	PL820	Wind	Y	0,429	0.000	Rela	From start	0,000
	Wy - Rüzgar	GCS	Uniform	0,429	1.000	Length		0,000
LF2359	CP320	Wind	Y	0,054	0.000	Rela	From start	0,000
	Wy - Rüzgar	GCS	Uniform	0,054	1.000	Length		0,000
LF2360	CP321	Wind	Y	0,054	0.000	Rela	From start	0,000
	Wy - Rüzgar	GCS	Uniform	0,054	1.000	Length		0,000
LF2361	CP322	Wind	Y	0,054	0.000	Rela	From start	0,000
	Wy - Rüzgar	GCS	Uniform	0,054	1.000	Length		0,000
LF2362	CP323	Wind	Y	0,054	0.000	Rela	From start	0,000
	Wy - Rüzgar	GCS	Uniform	0,054	1.000	Length		0,000
LF2363	CP324	Wind	Y	0,054	0.000	Rela	From start	0,000
	Wy - Rüzgar	GCS	Uniform	0,054	1.000	Length		0,000
LF2364	CP325	Wind	Y	0,054	0.000	Rela	From start	0,000
	Wy - Rüzgar	GCS	Uniform	0,054	1.000	Length		0,000
LF2365	B2902	Wind	Y	0,069	0.000	Rela	From start	0,000
	Wy - Rüzgar	GCS	Uniform	0,069	1.000	Length		0,000
LF2366	B2902	Wind	X	0,069	0.000	Rela	From start	0,000
	Wx - Rüzgar	GCS	Uniform	0,069	1.000	Length		0,000
LF2367	B2903	Wind	X	0,069	0.000	Rela	From start	0,000
	Wx - Rüzgar	GCS	Uniform	0,069	1.000	Length		0,000
LF2368	B2904	Wind	Y	0,069	0.000	Rela	From start	0,000
	Wy - Rüzgar	GCS	Uniform	0,069	1.000	Length		0,000
LF2369	B2906	Wind	Y	0,069	0.000	Rela	From start	0,000
	Wy - Rüzgar	GCS	Uniform	0,069	1.000	Length		0,000
LF2370	B2908	Wind	Y	0,069	0.000	Rela	From start	0,000
	Wy - Rüzgar	GCS	Uniform	0,069	1.000	Length		0,000
LF2371	B2910	Wind	Y	0,069	0.000	Rela	From start	0,000
	Wy - Rüzgar	GCS	Uniform	0,069	1.000	Length		0,000
LF2372	B2912	Wind	Y	0,069	0.000	Rela	From start	0,000
	Wy - Rüzgar	GCS	Uniform	0,069	1.000	Length		0,000
LF2373	B2914	Wind	Y	0,069	0.000	Rela	From start	0,000
	Wy - Rüzgar	GCS	Uniform	0,069	1.000	Length		0,000
LF2374	B2916	Wind	Y	0,069	0.000	Rela	From start	0,000
	Wy - Rüzgar	GCS	Uniform	0,069	1.000	Length		0,000
LF2375	B2918	Wind	X	0,057	0.000	Rela	From start	0,000
	Wx - Rüzgar	GCS	Uniform	0,057	1.000	Length		0,000

Name	Member Load case	Type System	Dir Distribution	Value - P_1 [kN/m] Value - P_2 [kN/m]	Pos x_1 Pos x_2	Coor Loc	Orig	Ecc ey Ecc ez
LF2376	B2926	Wind	Y	0,069	0.000	Rela	From start	0,000
	Wy - Rüzgar	GCS	Uniform	0,069	1.000	Length		0,000
LF2377	B2929	Wind	Y	0,069	0.000	Rela	From start	0,000
	Wy - Rüzgar	GCS	Uniform	0,069	1.000	Length		0,000
LF2378	B2932	Wind	Y	0,069	0.000	Rela	From start	0,000
	Wy - Rüzgar	GCS	Uniform	0,069	1.000	Length		0,000
LF2379	B2935	Wind	X	0,069	0.000	Rela	From start	0,000
	Wx - Rüzgar	GCS	Uniform	0,069	1.000	Length		0,000
LF2380	B2946	Wind	Y	0,048	0.000	Rela	From start	0,000
	Wy - Rüzgar	GCS	Uniform	0,048	1.000	Length		0,000
LF2381	B2947	Wind	Y	0,048	0.000	Rela	From start	0,000
	Wy - Rüzgar	GCS	Uniform	0,048	1.000	Length		0,000
LF2382	B2948	Wind	Y	0,048	0.000	Rela	From start	0,000
	Wy - Rüzgar	GCS	Uniform	0,048	1.000	Length		0,000
LF2383	B2949	Wind	Y	0,048	0.000	Rela	From start	0,000
	Wy - Rüzgar	GCS	Uniform	0,048	1.000	Length		0,000
LF2384	B2950	Wind	Y	0,048	0.000	Rela	From start	0,000
	Wy - Rüzgar	GCS	Uniform	0,048	1.000	Length		0,000
LF2385	B2951	Wind	Y	0,048	0.000	Rela	From start	0,000
	Wy - Rüzgar	GCS	Uniform	0,048	1.000	Length		0,000
LF2386	B2952	Wind	Y	0,048	0.000	Rela	From start	0,000
	Wy - Rüzgar	GCS	Uniform	0,048	1.000	Length		0,000
LF2387	B2953	Wind	Y	0,048	0.000	Rela	From start	0,000
	Wy - Rüzgar	GCS	Uniform	0,048	1.000	Length		0,000
LF2388	B2954	Wind	Y	0,048	0.000	Rela	From start	0,000
	Wy - Rüzgar	GCS	Uniform	0,048	1.000	Length		0,000
LF2389	B2955	Wind	Y	0,048	0.000	Rela	From start	0,000
	Wy - Rüzgar	GCS	Uniform	0,048	1.000	Length		0,000
LF2390	B2956	Wind	Y	0,048	0.000	Rela	From start	0,000
	Wy - Rüzgar	GCS	Uniform	0,048	1.000	Length		0,000
LF2391	B2957	Wind	Y	0,048	0.000	Rela	From start	0,000
	Wy - Rüzgar	GCS	Uniform	0,048	1.000	Length		0,000
LF2392	B2958	Wind	Y	0,048	0.000	Rela	From start	0,000
	Wy - Rüzgar	GCS	Uniform	0,048	1.000	Length		0,000
LF2393	B2959	Wind	Y	0,048	0.000	Rela	From start	0,000
	Wy - Rüzgar	GCS	Uniform	0,048	1.000	Length		0,000
LF2394	B2960	Wind	Y	0,048	0.000	Rela	From start	0,000
	Wy - Rüzgar	GCS	Uniform	0,048	1.000	Length		0,000
LF2395	B2961	Wind	Y	0,048	0.000	Rela	From start	0,000
	Wy - Rüzgar	GCS	Uniform	0,048	1.000	Length		0,000
LF2396	B2962	Wind	Y	0,048	0.000	Rela	From start	0,000
	Wy - Rüzgar	GCS	Uniform	0,048	1.000	Length		0,000
LF2397	B2963	Wind	Y	0,048	0.000	Rela	From start	0,000
	Wy - Rüzgar	GCS	Uniform	0,048	1.000	Length		0,000
LF2398	B2964	Wind	Y	0,048	0.000	Rela	From start	0,000
	Wy - Rüzgar	GCS	Uniform	0,048	1.000	Length		0,000
LF2399	B2965	Wind	Y	0,048	0.000	Rela	From start	0,000
	Wy - Rüzgar	GCS	Uniform	0,048	1.000	Length		0,000
LF2400	PL822	Wind	Y	0,429	0.000	Rela	From start	0,000
	Wy - Rüzgar	GCS	Uniform	0,429	1.000	Length		0,000
LF2401	PL824	Wind	Y	0,429	0.000	Rela	From start	0,000
	Wy - Rüzgar	GCS	Uniform	0,429	1.000	Length		0,000
LF2402	PL826	Wind	Y	0,429	0.000	Rela	From start	0,000
	Wy - Rüzgar	GCS	Uniform	0,429	1.000	Length		0,000
LF2403	PL828	Wind	Y	0,429	0.000	Rela	From start	0,000
	Wy - Rüzgar	GCS	Uniform	0,429	1.000	Length		0,000
LF2404	PL830	Wind	Y	0,429	0.000	Rela	From start	0,000
	Wy - Rüzgar	GCS	Uniform	0,429	1.000	Length		0,000
LF2405	PL832	Wind	Y	0,429	0.000	Rela	From start	0,000
	Wy - Rüzgar	GCS	Uniform	0,429	1.000	Length		0,000
LF2406	PL834	Wind	Y	0,429	0.000	Rela	From start	0,000
	Wy - Rüzgar	GCS	Uniform	0,429	1.000	Length		0,000
LF2407	PL836	Wind	Y	0,429	0.000	Rela	From start	0,000
	Wy - Rüzgar	GCS	Uniform	0,429	1.000	Length		0,000
LF2408	PL838	Wind	Y	0,429	0.000	Rela	From start	0,000
	Wy - Rüzgar	GCS	Uniform	0,429	1.000	Length		0,000
LF2409	PL840	Wind	Y	0,429	0.000	Rela	From start	0,000
	Wy - Rüzgar	GCS	Uniform	0,429	1.000	Length		0,000
LF2410	CP326	Wind	Y	0,054	0.000	Rela	From start	0,000
	Wy - Rüzgar	GCS	Uniform	0,054	1.000	Length		0,000
LF2411	CP327	Wind	Y	0,054	0.000	Rela	From start	0,000
	Wy - Rüzgar	GCS	Uniform	0,054	1.000	Length		0,000
LF2412	CP328	Wind	Y	0,054	0.000	Rela	From start	0,000
	Wy - Rüzgar	GCS	Uniform	0,054	1.000	Length		0,000

Name	Member Load case	Type System	Dir Distribution	Value - P_1 [kN/m] Value - P_2 [kN/m]	Pos x_1 Pos x_2	Coor Loc	Orig	Ecc ey Ecc ez
LF2413	CP329	Wind	Y	0,054	0.000	Rela	From start	0,000
	Wy - Rüzgar	GCS	Uniform	0,054	1.000	Length		0,000
LF2414	CP330	Wind	Y	0,054	0.000	Rela	From start	0,000
	Wy - Rüzgar	GCS	Uniform	0,054	1.000	Length		0,000
LF2415	CP331	Wind	Y	0,054	0.000	Rela	From start	0,000
	Wy - Rüzgar	GCS	Uniform	0,054	1.000	Length		0,000
LF2416	B2966	Wind	Y	0,069	0.000	Rela	From start	0,000
	Wy - Rüzgar	GCS	Uniform	0,069	1.000	Length		0,000
LF2417	B2966	Wind	X	0,069	0.000	Rela	From start	0,000
	Wx - Rüzgar	GCS	Uniform	0,069	1.000	Length		0,000
LF2418	B2967	Wind	X	0,069	0.000	Rela	From start	0,000
	Wx - Rüzgar	GCS	Uniform	0,069	1.000	Length		0,000
LF2419	B2968	Wind	Y	0,069	0.000	Rela	From start	0,000
	Wy - Rüzgar	GCS	Uniform	0,069	1.000	Length		0,000
LF2420	B2970	Wind	Y	0,069	0.000	Rela	From start	0,000
	Wy - Rüzgar	GCS	Uniform	0,069	1.000	Length		0,000
LF2421	B2972	Wind	Y	0,069	0.000	Rela	From start	0,000
	Wy - Rüzgar	GCS	Uniform	0,069	1.000	Length		0,000
LF2422	B2974	Wind	Y	0,069	0.000	Rela	From start	0,000
	Wy - Rüzgar	GCS	Uniform	0,069	1.000	Length		0,000
LF2423	B2976	Wind	Y	0,069	0.000	Rela	From start	0,000
	Wy - Rüzgar	GCS	Uniform	0,069	1.000	Length		0,000
LF2424	B2978	Wind	Y	0,069	0.000	Rela	From start	0,000
	Wy - Rüzgar	GCS	Uniform	0,069	1.000	Length		0,000
LF2425	B2980	Wind	Y	0,069	0.000	Rela	From start	0,000
	Wy - Rüzgar	GCS	Uniform	0,069	1.000	Length		0,000
LF2426	B2982	Wind	X	0,057	0.000	Rela	From start	0,000
	Wx - Rüzgar	GCS	Uniform	0,057	1.000	Length		0,000
LF2427	B2990	Wind	Y	0,069	0.000	Rela	From start	0,000
	Wy - Rüzgar	GCS	Uniform	0,069	1.000	Length		0,000
LF2428	B2993	Wind	Y	0,069	0.000	Rela	From start	0,000
	Wy - Rüzgar	GCS	Uniform	0,069	1.000	Length		0,000
LF2429	B2996	Wind	Y	0,069	0.000	Rela	From start	0,000
	Wy - Rüzgar	GCS	Uniform	0,069	1.000	Length		0,000
LF2430	B2999	Wind	X	0,069	0.000	Rela	From start	0,000
	Wx - Rüzgar	GCS	Uniform	0,069	1.000	Length		0,000
LF2431	B3010	Wind	Y	0,048	0.000	Rela	From start	0,000
	Wy - Rüzgar	GCS	Uniform	0,048	1.000	Length		0,000
LF2432	B3011	Wind	Y	0,048	0.000	Rela	From start	0,000
	Wy - Rüzgar	GCS	Uniform	0,048	1.000	Length		0,000
LF2433	B3012	Wind	Y	0,048	0.000	Rela	From start	0,000
	Wy - Rüzgar	GCS	Uniform	0,048	1.000	Length		0,000
LF2434	B3013	Wind	Y	0,048	0.000	Rela	From start	0,000
	Wy - Rüzgar	GCS	Uniform	0,048	1.000	Length		0,000
LF2435	B3014	Wind	Y	0,048	0.000	Rela	From start	0,000
	Wy - Rüzgar	GCS	Uniform	0,048	1.000	Length		0,000
LF2436	B3015	Wind	Y	0,048	0.000	Rela	From start	0,000
	Wy - Rüzgar	GCS	Uniform	0,048	1.000	Length		0,000
LF2437	B3016	Wind	Y	0,048	0.000	Rela	From start	0,000
	Wy - Rüzgar	GCS	Uniform	0,048	1.000	Length		0,000
LF2438	B3017	Wind	Y	0,048	0.000	Rela	From start	0,000
	Wy - Rüzgar	GCS	Uniform	0,048	1.000	Length		0,000
LF2439	B3018	Wind	Y	0,048	0.000	Rela	From start	0,000
	Wy - Rüzgar	GCS	Uniform	0,048	1.000	Length		0,000
LF2440	B3019	Wind	Y	0,048	0.000	Rela	From start	0,000
	Wy - Rüzgar	GCS	Uniform	0,048	1.000	Length		0,000
LF2441	B3020	Wind	Y	0,048	0.000	Rela	From start	0,000
	Wy - Rüzgar	GCS	Uniform	0,048	1.000	Length		0,000
LF2442	B3021	Wind	Y	0,048	0.000	Rela	From start	0,000
	Wy - Rüzgar	GCS	Uniform	0,048	1.000	Length		0,000
LF2443	B3022	Wind	Y	0,048	0.000	Rela	From start	0,000
	Wy - Rüzgar	GCS	Uniform	0,048	1.000	Length		0,000
LF2444	B3023	Wind	Y	0,048	0.000	Rela	From start	0,000
	Wy - Rüzgar	GCS	Uniform	0,048	1.000	Length		0,000
LF2445	B3024	Wind	Y	0,048	0.000	Rela	From start	0,000
	Wy - Rüzgar	GCS	Uniform	0,048	1.000	Length		0,000
LF2446	B3025	Wind	Y	0,048	0.000	Rela	From start	0,000
	Wy - Rüzgar	GCS	Uniform	0,048	1.000	Length		0,000
LF2447	B3026	Wind	Y	0,048	0.000	Rela	From start	0,000
	Wy - Rüzgar	GCS	Uniform	0,048	1.000	Length		0,000
LF2448	B3027	Wind	Y	0,048	0.000	Rela	From start	0,000
	Wy - Rüzgar	GCS	Uniform	0,048	1.000	Length		0,000
LF2449	B3028	Wind	Y	0,048	0.000	Rela	From start	0,000
	Wy - Rüzgar	GCS	Uniform	0,048	1.000	Length		0,000

Name	Member Load case	Type System	Dir Distribution	Value - P_1 [kN/m] Value - P_2 [kN/m]	Pos x_1 Pos x_2	Coor Loc	Orig	Ecc ey Ecc ez
LF2450	B3029	Wind	Y	0,048	0.000	Rela	From start	0,000
	Wy - Rüzgar	GCS	Uniform	0,048	1.000	Length		0,000
LF2451	PL842	Wind	Y	0,429	0.000	Rela	From start	0,000
	Wy - Rüzgar	GCS	Uniform	0,429	1.000	Length		0,000
LF2452	PL844	Wind	Y	0,429	0.000	Rela	From start	0,000
	Wy - Rüzgar	GCS	Uniform	0,429	1.000	Length		0,000
LF2453	PL846	Wind	Y	0,429	0.000	Rela	From start	0,000
	Wy - Rüzgar	GCS	Uniform	0,429	1.000	Length		0,000
LF2454	PL848	Wind	Y	0,429	0.000	Rela	From start	0,000
	Wy - Rüzgar	GCS	Uniform	0,429	1.000	Length		0,000
LF2455	PL850	Wind	Y	0,429	0.000	Rela	From start	0,000
	Wy - Rüzgar	GCS	Uniform	0,429	1.000	Length		0,000
LF2456	PL852	Wind	Y	0,429	0.000	Rela	From start	0,000
	Wy - Rüzgar	GCS	Uniform	0,429	1.000	Length		0,000
LF2457	PL854	Wind	Y	0,429	0.000	Rela	From start	0,000
	Wy - Rüzgar	GCS	Uniform	0,429	1.000	Length		0,000
LF2458	PL856	Wind	Y	0,429	0.000	Rela	From start	0,000
	Wy - Rüzgar	GCS	Uniform	0,429	1.000	Length		0,000
LF2459	PL858	Wind	Y	0,429	0.000	Rela	From start	0,000
	Wy - Rüzgar	GCS	Uniform	0,429	1.000	Length		0,000
LF2460	PL860	Wind	Y	0,429	0.000	Rela	From start	0,000
	Wy - Rüzgar	GCS	Uniform	0,429	1.000	Length		0,000
LF2461	CP332	Wind	Y	0,054	0.000	Rela	From start	0,000
	Wy - Rüzgar	GCS	Uniform	0,054	1.000	Length		0,000
LF2462	CP333	Wind	Y	0,054	0.000	Rela	From start	0,000
	Wy - Rüzgar	GCS	Uniform	0,054	1.000	Length		0,000
LF2463	CP334	Wind	Y	0,054	0.000	Rela	From start	0,000
	Wy - Rüzgar	GCS	Uniform	0,054	1.000	Length		0,000
LF2464	CP335	Wind	Y	0,054	0.000	Rela	From start	0,000
	Wy - Rüzgar	GCS	Uniform	0,054	1.000	Length		0,000
LF2465	CP336	Wind	Y	0,054	0.000	Rela	From start	0,000
	Wy - Rüzgar	GCS	Uniform	0,054	1.000	Length		0,000
LF2466	CP337	Wind	Y	0,054	0.000	Rela	From start	0,000
	Wy - Rüzgar	GCS	Uniform	0,054	1.000	Length		0,000
LF2467	B3030	Wind	Y	0,069	0.000	Rela	From start	0,000
	Wy - Rüzgar	GCS	Uniform	0,069	1.000	Length		0,000
LF2468	B3030	Wind	X	0,069	0.000	Rela	From start	0,000
	Wx - Rüzgar	GCS	Uniform	0,069	1.000	Length		0,000
LF2469	B3031	Wind	X	0,069	0.000	Rela	From start	0,000
	Wx - Rüzgar	GCS	Uniform	0,069	1.000	Length		0,000
LF2470	B3032	Wind	Y	0,069	0.000	Rela	From start	0,000
	Wy - Rüzgar	GCS	Uniform	0,069	1.000	Length		0,000
LF2471	B3034	Wind	Y	0,069	0.000	Rela	From start	0,000
	Wy - Rüzgar	GCS	Uniform	0,069	1.000	Length		0,000
LF2472	B3036	Wind	Y	0,069	0.000	Rela	From start	0,000
	Wy - Rüzgar	GCS	Uniform	0,069	1.000	Length		0,000
LF2473	B3038	Wind	Y	0,069	0.000	Rela	From start	0,000
	Wy - Rüzgar	GCS	Uniform	0,069	1.000	Length		0,000
LF2474	B3040	Wind	Y	0,069	0.000	Rela	From start	0,000
	Wy - Rüzgar	GCS	Uniform	0,069	1.000	Length		0,000
LF2475	B3042	Wind	Y	0,069	0.000	Rela	From start	0,000
	Wy - Rüzgar	GCS	Uniform	0,069	1.000	Length		0,000
LF2476	B3044	Wind	Y	0,069	0.000	Rela	From start	0,000
	Wy - Rüzgar	GCS	Uniform	0,069	1.000	Length		0,000
LF2477	B3046	Wind	X	0,057	0.000	Rela	From start	0,000
	Wx - Rüzgar	GCS	Uniform	0,057	1.000	Length		0,000
LF2478	B3054	Wind	Y	0,069	0.000	Rela	From start	0,000
	Wy - Rüzgar	GCS	Uniform	0,069	1.000	Length		0,000
LF2479	B3057	Wind	Y	0,069	0.000	Rela	From start	0,000
	Wy - Rüzgar	GCS	Uniform	0,069	1.000	Length		0,000
LF2480	B3060	Wind	Y	0,069	0.000	Rela	From start	0,000
	Wy - Rüzgar	GCS	Uniform	0,069	1.000	Length		0,000
LF2481	B3063	Wind	X	0,069	0.000	Rela	From start	0,000
	Wx - Rüzgar	GCS	Uniform	0,069	1.000	Length		0,000
LF2482	B3074	Wind	Y	0,048	0.000	Rela	From start	0,000
	Wy - Rüzgar	GCS	Uniform	0,048	1.000	Length		0,000
LF2483	B3075	Wind	Y	0,048	0.000	Rela	From start	0,000
	Wy - Rüzgar	GCS	Uniform	0,048	1.000	Length		0,000
LF2484	B3076	Wind	Y	0,048	0.000	Rela	From start	0,000
	Wy - Rüzgar	GCS	Uniform	0,048	1.000	Length		0,000
LF2485	B3077	Wind	Y	0,048	0.000	Rela	From start	0,000
	Wy - Rüzgar	GCS	Uniform	0,048	1.000	Length		0,000
LF2486	B3078	Wind	Y	0,048	0.000	Rela	From start	0,000
	Wy - Rüzgar	GCS	Uniform	0,048	1.000	Length		0,000

Name	Member Load case	Type System	Dir Distribution	Value - P_1 [kN/m] Value - P_2 [kN/m]	Pos x_1 Pos x_2	Coor Loc	Orig	Ecc ey Ecc ez
LF2487	B3079	Wind	Y	0,048	0.000	Rela	From start	0,000
	Wy - Rüzgar	GCS	Uniform	0,048	1.000	Length		0,000
LF2488	B3080	Wind	Y	0,048	0.000	Rela	From start	0,000
	Wy - Rüzgar	GCS	Uniform	0,048	1.000	Length		0,000
LF2489	B3081	Wind	Y	0,048	0.000	Rela	From start	0,000
	Wy - Rüzgar	GCS	Uniform	0,048	1.000	Length		0,000
LF2490	B3082	Wind	Y	0,048	0.000	Rela	From start	0,000
	Wy - Rüzgar	GCS	Uniform	0,048	1.000	Length		0,000
LF2491	B3083	Wind	Y	0,048	0.000	Rela	From start	0,000
	Wy - Rüzgar	GCS	Uniform	0,048	1.000	Length		0,000
LF2492	B3084	Wind	Y	0,048	0.000	Rela	From start	0,000
	Wy - Rüzgar	GCS	Uniform	0,048	1.000	Length		0,000
LF2493	B3085	Wind	Y	0,048	0.000	Rela	From start	0,000
	Wy - Rüzgar	GCS	Uniform	0,048	1.000	Length		0,000
LF2494	B3086	Wind	Y	0,048	0.000	Rela	From start	0,000
	Wy - Rüzgar	GCS	Uniform	0,048	1.000	Length		0,000
LF2495	B3087	Wind	Y	0,048	0.000	Rela	From start	0,000
	Wy - Rüzgar	GCS	Uniform	0,048	1.000	Length		0,000
LF2496	B3088	Wind	Y	0,048	0.000	Rela	From start	0,000
	Wy - Rüzgar	GCS	Uniform	0,048	1.000	Length		0,000
LF2497	B3089	Wind	Y	0,048	0.000	Rela	From start	0,000
	Wy - Rüzgar	GCS	Uniform	0,048	1.000	Length		0,000
LF2498	B3090	Wind	Y	0,048	0.000	Rela	From start	0,000
	Wy - Rüzgar	GCS	Uniform	0,048	1.000	Length		0,000
LF2499	B3091	Wind	Y	0,048	0.000	Rela	From start	0,000
	Wy - Rüzgar	GCS	Uniform	0,048	1.000	Length		0,000
LF2500	B3092	Wind	Y	0,048	0.000	Rela	From start	0,000
	Wy - Rüzgar	GCS	Uniform	0,048	1.000	Length		0,000
LF2501	B3093	Wind	Y	0,048	0.000	Rela	From start	0,000
	Wy - Rüzgar	GCS	Uniform	0,048	1.000	Length		0,000
LF2502	PL862	Wind	Y	0,429	0.000	Rela	From start	0,000
	Wy - Rüzgar	GCS	Uniform	0,429	1.000	Length		0,000
LF2503	PL864	Wind	Y	0,429	0.000	Rela	From start	0,000
	Wy - Rüzgar	GCS	Uniform	0,429	1.000	Length		0,000
LF2504	PL866	Wind	Y	0,429	0.000	Rela	From start	0,000
	Wy - Rüzgar	GCS	Uniform	0,429	1.000	Length		0,000
LF2505	PL868	Wind	Y	0,429	0.000	Rela	From start	0,000
	Wy - Rüzgar	GCS	Uniform	0,429	1.000	Length		0,000
LF2506	PL870	Wind	Y	0,429	0.000	Rela	From start	0,000
	Wy - Rüzgar	GCS	Uniform	0,429	1.000	Length		0,000
LF2507	PL872	Wind	Y	0,429	0.000	Rela	From start	0,000
	Wy - Rüzgar	GCS	Uniform	0,429	1.000	Length		0,000
LF2508	PL874	Wind	Y	0,429	0.000	Rela	From start	0,000
	Wy - Rüzgar	GCS	Uniform	0,429	1.000	Length		0,000
LF2509	PL876	Wind	Y	0,429	0.000	Rela	From start	0,000
	Wy - Rüzgar	GCS	Uniform	0,429	1.000	Length		0,000
LF2510	PL878	Wind	Y	0,429	0.000	Rela	From start	0,000
	Wy - Rüzgar	GCS	Uniform	0,429	1.000	Length		0,000
LF2511	PL880	Wind	Y	0,429	0.000	Rela	From start	0,000
	Wy - Rüzgar	GCS	Uniform	0,429	1.000	Length		0,000
LF2512	CP338	Wind	Y	0,054	0.000	Rela	From start	0,000
	Wy - Rüzgar	GCS	Uniform	0,054	1.000	Length		0,000
LF2513	CP339	Wind	Y	0,054	0.000	Rela	From start	0,000
	Wy - Rüzgar	GCS	Uniform	0,054	1.000	Length		0,000
LF2514	CP340	Wind	Y	0,054	0.000	Rela	From start	0,000
	Wy - Rüzgar	GCS	Uniform	0,054	1.000	Length		0,000
LF2515	CP341	Wind	Y	0,054	0.000	Rela	From start	0,000
	Wy - Rüzgar	GCS	Uniform	0,054	1.000	Length		0,000
LF2516	CP342	Wind	Y	0,054	0.000	Rela	From start	0,000
	Wy - Rüzgar	GCS	Uniform	0,054	1.000	Length		0,000
LF2517	CP343	Wind	Y	0,054	0.000	Rela	From start	0,000
	Wy - Rüzgar	GCS	Uniform	0,054	1.000	Length		0,000
LF2518	B3094	Wind	Y	0,069	0.000	Rela	From start	0,000
	Wy - Rüzgar	GCS	Uniform	0,069	1.000	Length		0,000
LF2519	B3094	Wind	X	0,069	0.000	Rela	From start	0,000
	Wx - Rüzgar	GCS	Uniform	0,069	1.000	Length		0,000
LF2520	B3095	Wind	X	0,069	0.000	Rela	From start	0,000
	Wx - Rüzgar	GCS	Uniform	0,069	1.000	Length		0,000
LF2521	B3096	Wind	Y	0,069	0.000	Rela	From start	0,000
	Wy - Rüzgar	GCS	Uniform	0,069	1.000	Length		0,000
LF2522	B3098	Wind	Y	0,069	0.000	Rela	From start	0,000
	Wy - Rüzgar	GCS	Uniform	0,069	1.000	Length		0,000
LF2523	B3100	Wind	Y	0,069	0.000	Rela	From start	0,000
	Wy - Rüzgar	GCS	Uniform	0,069	1.000	Length		0,000

Name	Member Load case	Type System	Dir Distribution	Value - P_1 [kN/m] Value - P_2 [kN/m]	Pos x_1 Pos x_2	Coor Loc	Orig	Ecc ey Ecc ez
LF2524	B3102	Wind	Y	0,069	0.000	Rela	From start	0,000
	Wy - Rüzgar	GCS	Uniform	0,069	1.000	Length		0,000
LF2525	B3104	Wind	Y	0,069	0.000	Rela	From start	0,000
	Wy - Rüzgar	GCS	Uniform	0,069	1.000	Length		0,000
LF2526	B3106	Wind	Y	0,069	0.000	Rela	From start	0,000
	Wy - Rüzgar	GCS	Uniform	0,069	1.000	Length		0,000
LF2527	B3108	Wind	Y	0,069	0.000	Rela	From start	0,000
	Wy - Rüzgar	GCS	Uniform	0,069	1.000	Length		0,000
LF2528	B3110	Wind	X	0,057	0.000	Rela	From start	0,000
	Wx - Rüzgar	GCS	Uniform	0,057	1.000	Length		0,000
LF2529	B3118	Wind	Y	0,069	0.000	Rela	From start	0,000
	Wy - Rüzgar	GCS	Uniform	0,069	1.000	Length		0,000
LF2530	B3121	Wind	Y	0,069	0.000	Rela	From start	0,000
	Wy - Rüzgar	GCS	Uniform	0,069	1.000	Length		0,000
LF2531	B3124	Wind	Y	0,069	0.000	Rela	From start	0,000
	Wy - Rüzgar	GCS	Uniform	0,069	1.000	Length		0,000
LF2532	B3127	Wind	X	0,069	0.000	Rela	From start	0,000
	Wx - Rüzgar	GCS	Uniform	0,069	1.000	Length		0,000
LF2533	B3138	Wind	Y	0,048	0.000	Rela	From start	0,000
	Wy - Rüzgar	GCS	Uniform	0,048	1.000	Length		0,000
LF2534	B3139	Wind	Y	0,048	0.000	Rela	From start	0,000
	Wy - Rüzgar	GCS	Uniform	0,048	1.000	Length		0,000
LF2535	B3140	Wind	Y	0,048	0.000	Rela	From start	0,000
	Wy - Rüzgar	GCS	Uniform	0,048	1.000	Length		0,000
LF2536	B3141	Wind	Y	0,048	0.000	Rela	From start	0,000
	Wy - Rüzgar	GCS	Uniform	0,048	1.000	Length		0,000
LF2537	B3142	Wind	Y	0,048	0.000	Rela	From start	0,000
	Wy - Rüzgar	GCS	Uniform	0,048	1.000	Length		0,000
LF2538	B3143	Wind	Y	0,048	0.000	Rela	From start	0,000
	Wy - Rüzgar	GCS	Uniform	0,048	1.000	Length		0,000
LF2539	B3144	Wind	Y	0,048	0.000	Rela	From start	0,000
	Wy - Rüzgar	GCS	Uniform	0,048	1.000	Length		0,000
LF2540	B3145	Wind	Y	0,048	0.000	Rela	From start	0,000
	Wy - Rüzgar	GCS	Uniform	0,048	1.000	Length		0,000
LF2541	B3146	Wind	Y	0,048	0.000	Rela	From start	0,000
	Wy - Rüzgar	GCS	Uniform	0,048	1.000	Length		0,000
LF2542	B3147	Wind	Y	0,048	0.000	Rela	From start	0,000
	Wy - Rüzgar	GCS	Uniform	0,048	1.000	Length		0,000
LF2543	B3148	Wind	Y	0,048	0.000	Rela	From start	0,000
	Wy - Rüzgar	GCS	Uniform	0,048	1.000	Length		0,000
LF2544	B3149	Wind	Y	0,048	0.000	Rela	From start	0,000
	Wy - Rüzgar	GCS	Uniform	0,048	1.000	Length		0,000
LF2545	B3150	Wind	Y	0,048	0.000	Rela	From start	0,000
	Wy - Rüzgar	GCS	Uniform	0,048	1.000	Length		0,000
LF2546	B3151	Wind	Y	0,048	0.000	Rela	From start	0,000
	Wy - Rüzgar	GCS	Uniform	0,048	1.000	Length		0,000
LF2547	B3152	Wind	Y	0,048	0.000	Rela	From start	0,000
	Wy - Rüzgar	GCS	Uniform	0,048	1.000	Length		0,000
LF2548	B3153	Wind	Y	0,048	0.000	Rela	From start	0,000
	Wy - Rüzgar	GCS	Uniform	0,048	1.000	Length		0,000
LF2549	B3154	Wind	Y	0,048	0.000	Rela	From start	0,000
	Wy - Rüzgar	GCS	Uniform	0,048	1.000	Length		0,000
LF2550	B3155	Wind	Y	0,048	0.000	Rela	From start	0,000
	Wy - Rüzgar	GCS	Uniform	0,048	1.000	Length		0,000
LF2551	B3156	Wind	Y	0,048	0.000	Rela	From start	0,000
	Wy - Rüzgar	GCS	Uniform	0,048	1.000	Length		0,000
LF2552	B3157	Wind	Y	0,048	0.000	Rela	From start	0,000
	Wy - Rüzgar	GCS	Uniform	0,048	1.000	Length		0,000
LF2553	PL882	Wind	Y	0,429	0.000	Rela	From start	0,000
	Wy - Rüzgar	GCS	Uniform	0,429	1.000	Length		0,000
LF2554	PL884	Wind	Y	0,429	0.000	Rela	From start	0,000
	Wy - Rüzgar	GCS	Uniform	0,429	1.000	Length		0,000
LF2555	PL886	Wind	Y	0,429	0.000	Rela	From start	0,000
	Wy - Rüzgar	GCS	Uniform	0,429	1.000	Length		0,000
LF2556	PL888	Wind	Y	0,429	0.000	Rela	From start	0,000
	Wy - Rüzgar	GCS	Uniform	0,429	1.000	Length		0,000
LF2557	PL890	Wind	Y	0,429	0.000	Rela	From start	0,000
	Wy - Rüzgar	GCS	Uniform	0,429	1.000	Length		0,000
LF2558	PL892	Wind	Y	0,429	0.000	Rela	From start	0,000
	Wy - Rüzgar	GCS	Uniform	0,429	1.000	Length		0,000
LF2559	PL894	Wind	Y	0,429	0.000	Rela	From start	0,000
	Wy - Rüzgar	GCS	Uniform	0,429	1.000	Length		0,000
LF2560	PL896	Wind	Y	0,429	0.000	Rela	From start	0,000
	Wy - Rüzgar	GCS	Uniform	0,429	1.000	Length		0,000

Name	Member Load case	Type System	Dir Distribution	Value - P_1 [kN/m] Value - P_2 [kN/m]	Pos x_1 Pos x_2	Coor Loc	Orig	Ecc ey Ecc ez
LF2561	PL898	Wind	Y	0,429	0.000	Rela	From start	0,000
	Wy - Rüzgar	GCS	Uniform	0,429	1.000	Length		0,000
LF2562	PL900	Wind	Y	0,429	0.000	Rela	From start	0,000
	Wy - Rüzgar	GCS	Uniform	0,429	1.000	Length		0,000
LF2563	CP344	Wind	Y	0,054	0.000	Rela	From start	0,000
	Wy - Rüzgar	GCS	Uniform	0,054	1.000	Length		0,000
LF2564	CP345	Wind	Y	0,054	0.000	Rela	From start	0,000
	Wy - Rüzgar	GCS	Uniform	0,054	1.000	Length		0,000
LF2565	CP346	Wind	Y	0,054	0.000	Rela	From start	0,000
	Wy - Rüzgar	GCS	Uniform	0,054	1.000	Length		0,000
LF2566	CP347	Wind	Y	0,054	0.000	Rela	From start	0,000
	Wy - Rüzgar	GCS	Uniform	0,054	1.000	Length		0,000
LF2567	CP348	Wind	Y	0,054	0.000	Rela	From start	0,000
	Wy - Rüzgar	GCS	Uniform	0,054	1.000	Length		0,000
LF2568	CP349	Wind	Y	0,054	0.000	Rela	From start	0,000
	Wy - Rüzgar	GCS	Uniform	0,054	1.000	Length		0,000
LF2569	B3158	Wind	Y	0,069	0.000	Rela	From start	0,000
	Wy - Rüzgar	GCS	Uniform	0,069	1.000	Length		0,000
LF2570	B3158	Wind	X	0,069	0.000	Rela	From start	0,000
	Wx - Rüzgar	GCS	Uniform	0,069	1.000	Length		0,000
LF2571	B3159	Wind	X	0,069	0.000	Rela	From start	0,000
	Wx - Rüzgar	GCS	Uniform	0,069	1.000	Length		0,000
LF2572	B3160	Wind	Y	0,069	0.000	Rela	From start	0,000
	Wy - Rüzgar	GCS	Uniform	0,069	1.000	Length		0,000
LF2573	B3162	Wind	Y	0,069	0.000	Rela	From start	0,000
	Wy - Rüzgar	GCS	Uniform	0,069	1.000	Length		0,000
LF2574	B3164	Wind	Y	0,069	0.000	Rela	From start	0,000
	Wy - Rüzgar	GCS	Uniform	0,069	1.000	Length		0,000
LF2575	B3166	Wind	Y	0,069	0.000	Rela	From start	0,000
	Wy - Rüzgar	GCS	Uniform	0,069	1.000	Length		0,000
LF2576	B3168	Wind	Y	0,069	0.000	Rela	From start	0,000
	Wy - Rüzgar	GCS	Uniform	0,069	1.000	Length		0,000
LF2577	B3170	Wind	Y	0,069	0.000	Rela	From start	0,000
	Wy - Rüzgar	GCS	Uniform	0,069	1.000	Length		0,000
LF2578	B3172	Wind	Y	0,069	0.000	Rela	From start	0,000
	Wy - Rüzgar	GCS	Uniform	0,069	1.000	Length		0,000
LF2579	B3174	Wind	X	0,057	0.000	Rela	From start	0,000
	Wx - Rüzgar	GCS	Uniform	0,057	1.000	Length		0,000
LF2580	B3182	Wind	Y	0,069	0.000	Rela	From start	0,000
	Wy - Rüzgar	GCS	Uniform	0,069	1.000	Length		0,000
LF2581	B3185	Wind	Y	0,069	0.000	Rela	From start	0,000
	Wy - Rüzgar	GCS	Uniform	0,069	1.000	Length		0,000
LF2582	B3188	Wind	Y	0,069	0.000	Rela	From start	0,000
	Wy - Rüzgar	GCS	Uniform	0,069	1.000	Length		0,000
LF2583	B3191	Wind	X	0,069	0.000	Rela	From start	0,000
	Wx - Rüzgar	GCS	Uniform	0,069	1.000	Length		0,000
LF2584	B3202	Wind	Y	0,048	0.000	Rela	From start	0,000
	Wy - Rüzgar	GCS	Uniform	0,048	1.000	Length		0,000
LF2585	B3203	Wind	Y	0,048	0.000	Rela	From start	0,000
	Wy - Rüzgar	GCS	Uniform	0,048	1.000	Length		0,000
LF2586	B3204	Wind	Y	0,048	0.000	Rela	From start	0,000
	Wy - Rüzgar	GCS	Uniform	0,048	1.000	Length		0,000
LF2587	B3205	Wind	Y	0,048	0.000	Rela	From start	0,000
	Wy - Rüzgar	GCS	Uniform	0,048	1.000	Length		0,000
LF2588	B3206	Wind	Y	0,048	0.000	Rela	From start	0,000
	Wy - Rüzgar	GCS	Uniform	0,048	1.000	Length		0,000
LF2589	B3207	Wind	Y	0,048	0.000	Rela	From start	0,000
	Wy - Rüzgar	GCS	Uniform	0,048	1.000	Length		0,000
LF2590	B3208	Wind	Y	0,048	0.000	Rela	From start	0,000
	Wy - Rüzgar	GCS	Uniform	0,048	1.000	Length		0,000
LF2591	B3209	Wind	Y	0,048	0.000	Rela	From start	0,000
	Wy - Rüzgar	GCS	Uniform	0,048	1.000	Length		0,000
LF2592	B3210	Wind	Y	0,048	0.000	Rela	From start	0,000
	Wy - Rüzgar	GCS	Uniform	0,048	1.000	Length		0,000
LF2593	B3211	Wind	Y	0,048	0.000	Rela	From start	0,000
	Wy - Rüzgar	GCS	Uniform	0,048	1.000	Length		0,000
LF2594	B3212	Wind	Y	0,048	0.000	Rela	From start	0,000
	Wy - Rüzgar	GCS	Uniform	0,048	1.000	Length		0,000
LF2595	B3213	Wind	Y	0,048	0.000	Rela	From start	0,000
	Wy - Rüzgar	GCS	Uniform	0,048	1.000	Length		0,000
LF2596	B3214	Wind	Y	0,048	0.000	Rela	From start	0,000
	Wy - Rüzgar	GCS	Uniform	0,048	1.000	Length		0,000
LF2597	B3215	Wind	Y	0,048	0.000	Rela	From start	0,000
	Wy - Rüzgar	GCS	Uniform	0,048	1.000	Length		0,000

Name	Member Load case	Type System	Dir Distribution	Value - P_1 [kN/m] Value - P_2 [kN/m]	Pos x_1 Pos x_2	Coor Loc	Orig	Ecc ey Ecc ez
LF2598	B3216	Wind	Y	0,048	0.000	Rela	From start	0,000
	Wy - Rüzgar	GCS	Uniform	0,048	1.000	Length		0,000
LF2599	B3217	Wind	Y	0,048	0.000	Rela	From start	0,000
	Wy - Rüzgar	GCS	Uniform	0,048	1.000	Length		0,000
LF2600	B3218	Wind	Y	0,048	0.000	Rela	From start	0,000
	Wy - Rüzgar	GCS	Uniform	0,048	1.000	Length		0,000
LF2601	B3219	Wind	Y	0,048	0.000	Rela	From start	0,000
	Wy - Rüzgar	GCS	Uniform	0,048	1.000	Length		0,000
LF2602	B3220	Wind	Y	0,048	0.000	Rela	From start	0,000
	Wy - Rüzgar	GCS	Uniform	0,048	1.000	Length		0,000
LF2603	B3221	Wind	Y	0,048	0.000	Rela	From start	0,000
	Wy - Rüzgar	GCS	Uniform	0,048	1.000	Length		0,000
LF2604	PL902	Wind	Y	0,429	0.000	Rela	From start	0,000
	Wy - Rüzgar	GCS	Uniform	0,429	1.000	Length		0,000
LF2605	PL904	Wind	Y	0,429	0.000	Rela	From start	0,000
	Wy - Rüzgar	GCS	Uniform	0,429	1.000	Length		0,000
LF2606	PL906	Wind	Y	0,429	0.000	Rela	From start	0,000
	Wy - Rüzgar	GCS	Uniform	0,429	1.000	Length		0,000
LF2607	PL908	Wind	Y	0,429	0.000	Rela	From start	0,000
	Wy - Rüzgar	GCS	Uniform	0,429	1.000	Length		0,000
LF2608	PL910	Wind	Y	0,429	0.000	Rela	From start	0,000
	Wy - Rüzgar	GCS	Uniform	0,429	1.000	Length		0,000
LF2609	PL912	Wind	Y	0,429	0.000	Rela	From start	0,000
	Wy - Rüzgar	GCS	Uniform	0,429	1.000	Length		0,000
LF2610	PL914	Wind	Y	0,429	0.000	Rela	From start	0,000
	Wy - Rüzgar	GCS	Uniform	0,429	1.000	Length		0,000
LF2611	PL916	Wind	Y	0,429	0.000	Rela	From start	0,000
	Wy - Rüzgar	GCS	Uniform	0,429	1.000	Length		0,000
LF2612	PL918	Wind	Y	0,429	0.000	Rela	From start	0,000
	Wy - Rüzgar	GCS	Uniform	0,429	1.000	Length		0,000
LF2613	PL920	Wind	Y	0,429	0.000	Rela	From start	0,000
	Wy - Rüzgar	GCS	Uniform	0,429	1.000	Length		0,000
LF2614	CP350	Wind	Y	0,054	0.000	Rela	From start	0,000
	Wy - Rüzgar	GCS	Uniform	0,054	1.000	Length		0,000
LF2615	CP351	Wind	Y	0,054	0.000	Rela	From start	0,000
	Wy - Rüzgar	GCS	Uniform	0,054	1.000	Length		0,000
LF2616	CP352	Wind	Y	0,054	0.000	Rela	From start	0,000
	Wy - Rüzgar	GCS	Uniform	0,054	1.000	Length		0,000
LF2617	CP353	Wind	Y	0,054	0.000	Rela	From start	0,000
	Wy - Rüzgar	GCS	Uniform	0,054	1.000	Length		0,000
LF2618	CP354	Wind	Y	0,054	0.000	Rela	From start	0,000
	Wy - Rüzgar	GCS	Uniform	0,054	1.000	Length		0,000
LF2619	CP355	Wind	Y	0,054	0.000	Rela	From start	0,000
	Wy - Rüzgar	GCS	Uniform	0,054	1.000	Length		0,000
LF2620	B3222	Wind	Y	0,069	0.000	Rela	From start	0,000
	Wy - Rüzgar	GCS	Uniform	0,069	1.000	Length		0,000
LF2621	B3222	Wind	X	0,069	0.000	Rela	From start	0,000
	Wx - Rüzgar	GCS	Uniform	0,069	1.000	Length		0,000
LF2622	B3223	Wind	X	0,069	0.000	Rela	From start	0,000
	Wx - Rüzgar	GCS	Uniform	0,069	1.000	Length		0,000
LF2623	B3224	Wind	Y	0,069	0.000	Rela	From start	0,000
	Wy - Rüzgar	GCS	Uniform	0,069	1.000	Length		0,000
LF2624	B3226	Wind	Y	0,069	0.000	Rela	From start	0,000
	Wy - Rüzgar	GCS	Uniform	0,069	1.000	Length		0,000
LF2625	B3228	Wind	Y	0,069	0.000	Rela	From start	0,000
	Wy - Rüzgar	GCS	Uniform	0,069	1.000	Length		0,000
LF2626	B3230	Wind	Y	0,069	0.000	Rela	From start	0,000
	Wy - Rüzgar	GCS	Uniform	0,069	1.000	Length		0,000
LF2627	B3232	Wind	Y	0,069	0.000	Rela	From start	0,000
	Wy - Rüzgar	GCS	Uniform	0,069	1.000	Length		0,000
LF2628	B3234	Wind	Y	0,069	0.000	Rela	From start	0,000
	Wy - Rüzgar	GCS	Uniform	0,069	1.000	Length		0,000
LF2629	B3236	Wind	Y	0,069	0.000	Rela	From start	0,000
	Wy - Rüzgar	GCS	Uniform	0,069	1.000	Length		0,000
LF2630	B3238	Wind	X	0,057	0.000	Rela	From start	0,000
	Wx - Rüzgar	GCS	Uniform	0,057	1.000	Length		0,000
LF2631	B3246	Wind	Y	0,069	0.000	Rela	From start	0,000
	Wy - Rüzgar	GCS	Uniform	0,069	1.000	Length		0,000
LF2632	B3249	Wind	Y	0,069	0.000	Rela	From start	0,000
	Wy - Rüzgar	GCS	Uniform	0,069	1.000	Length		0,000
LF2633	B3252	Wind	Y	0,069	0.000	Rela	From start	0,000
	Wy - Rüzgar	GCS	Uniform	0,069	1.000	Length		0,000
LF2634	B3255	Wind	X	0,069	0.000	Rela	From start	0,000
	Wx - Rüzgar	GCS	Uniform	0,069	1.000	Length		0,000

Name	Member Load case	Type System	Dir Distribution	Value - P_1 [kN/m] Value - P_2 [kN/m]	Pos x_1 Pos x_2	Coor Loc	Orig	Ecc ey Ecc ez
LF2635	B3266	Wind	Y	0,048	0.000	Rela	From start	0,000
	Wy - Rüzgar	GCS	Uniform	0,048	1.000	Length		0,000
LF2636	B3267	Wind	Y	0,048	0.000	Rela	From start	0,000
	Wy - Rüzgar	GCS	Uniform	0,048	1.000	Length		0,000
LF2637	B3268	Wind	Y	0,048	0.000	Rela	From start	0,000
	Wy - Rüzgar	GCS	Uniform	0,048	1.000	Length		0,000
LF2638	B3269	Wind	Y	0,048	0.000	Rela	From start	0,000
	Wy - Rüzgar	GCS	Uniform	0,048	1.000	Length		0,000
LF2639	B3270	Wind	Y	0,048	0.000	Rela	From start	0,000
	Wy - Rüzgar	GCS	Uniform	0,048	1.000	Length		0,000
LF2640	B3271	Wind	Y	0,048	0.000	Rela	From start	0,000
	Wy - Rüzgar	GCS	Uniform	0,048	1.000	Length		0,000
LF2641	B3272	Wind	Y	0,048	0.000	Rela	From start	0,000
	Wy - Rüzgar	GCS	Uniform	0,048	1.000	Length		0,000
LF2642	B3273	Wind	Y	0,048	0.000	Rela	From start	0,000
	Wy - Rüzgar	GCS	Uniform	0,048	1.000	Length		0,000
LF2643	B3274	Wind	Y	0,048	0.000	Rela	From start	0,000
	Wy - Rüzgar	GCS	Uniform	0,048	1.000	Length		0,000
LF2644	B3275	Wind	Y	0,048	0.000	Rela	From start	0,000
	Wy - Rüzgar	GCS	Uniform	0,048	1.000	Length		0,000
LF2645	B3276	Wind	Y	0,048	0.000	Rela	From start	0,000
	Wy - Rüzgar	GCS	Uniform	0,048	1.000	Length		0,000
LF2646	B3277	Wind	Y	0,048	0.000	Rela	From start	0,000
	Wy - Rüzgar	GCS	Uniform	0,048	1.000	Length		0,000
LF2647	B3278	Wind	Y	0,048	0.000	Rela	From start	0,000
	Wy - Rüzgar	GCS	Uniform	0,048	1.000	Length		0,000
LF2648	B3279	Wind	Y	0,048	0.000	Rela	From start	0,000
	Wy - Rüzgar	GCS	Uniform	0,048	1.000	Length		0,000
LF2649	B3280	Wind	Y	0,048	0.000	Rela	From start	0,000
	Wy - Rüzgar	GCS	Uniform	0,048	1.000	Length		0,000
LF2650	B3281	Wind	Y	0,048	0.000	Rela	From start	0,000
	Wy - Rüzgar	GCS	Uniform	0,048	1.000	Length		0,000
LF2651	B3282	Wind	Y	0,048	0.000	Rela	From start	0,000
	Wy - Rüzgar	GCS	Uniform	0,048	1.000	Length		0,000
LF2652	B3283	Wind	Y	0,048	0.000	Rela	From start	0,000
	Wy - Rüzgar	GCS	Uniform	0,048	1.000	Length		0,000
LF2653	B3284	Wind	Y	0,048	0.000	Rela	From start	0,000
	Wy - Rüzgar	GCS	Uniform	0,048	1.000	Length		0,000
LF2654	B3285	Wind	Y	0,048	0.000	Rela	From start	0,000
	Wy - Rüzgar	GCS	Uniform	0,048	1.000	Length		0,000
LF2655	PL922	Wind	Y	0,429	0.000	Rela	From start	0,000
	Wy - Rüzgar	GCS	Uniform	0,429	1.000	Length		0,000
LF2656	PL924	Wind	Y	0,429	0.000	Rela	From start	0,000
	Wy - Rüzgar	GCS	Uniform	0,429	1.000	Length		0,000
LF2657	PL926	Wind	Y	0,429	0.000	Rela	From start	0,000
	Wy - Rüzgar	GCS	Uniform	0,429	1.000	Length		0,000
LF2658	PL928	Wind	Y	0,429	0.000	Rela	From start	0,000
	Wy - Rüzgar	GCS	Uniform	0,429	1.000	Length		0,000
LF2659	PL930	Wind	Y	0,429	0.000	Rela	From start	0,000
	Wy - Rüzgar	GCS	Uniform	0,429	1.000	Length		0,000
LF2660	PL932	Wind	Y	0,429	0.000	Rela	From start	0,000
	Wy - Rüzgar	GCS	Uniform	0,429	1.000	Length		0,000
LF2661	PL934	Wind	Y	0,429	0.000	Rela	From start	0,000
	Wy - Rüzgar	GCS	Uniform	0,429	1.000	Length		0,000
LF2662	PL936	Wind	Y	0,429	0.000	Rela	From start	0,000
	Wy - Rüzgar	GCS	Uniform	0,429	1.000	Length		0,000
LF2663	PL938	Wind	Y	0,429	0.000	Rela	From start	0,000
	Wy - Rüzgar	GCS	Uniform	0,429	1.000	Length		0,000
LF2664	PL940	Wind	Y	0,429	0.000	Rela	From start	0,000
	Wy - Rüzgar	GCS	Uniform	0,429	1.000	Length		0,000
LF2665	CP356	Wind	Y	0,054	0.000	Rela	From start	0,000
	Wy - Rüzgar	GCS	Uniform	0,054	1.000	Length		0,000
LF2666	CP357	Wind	Y	0,054	0.000	Rela	From start	0,000
	Wy - Rüzgar	GCS	Uniform	0,054	1.000	Length		0,000
LF2667	CP358	Wind	Y	0,054	0.000	Rela	From start	0,000
	Wy - Rüzgar	GCS	Uniform	0,054	1.000	Length		0,000
LF2668	CP359	Wind	Y	0,054	0.000	Rela	From start	0,000
	Wy - Rüzgar	GCS	Uniform	0,054	1.000	Length		0,000
LF2669	CP360	Wind	Y	0,054	0.000	Rela	From start	0,000
	Wy - Rüzgar	GCS	Uniform	0,054	1.000	Length		0,000
LF2670	CP361	Wind	Y	0,054	0.000	Rela	From start	0,000
	Wy - Rüzgar	GCS	Uniform	0,054	1.000	Length		0,000
LF2671	B3286	Wind	Y	0,069	0.000	Rela	From start	0,000
	Wy - Rüzgar	GCS	Uniform	0,069	1.000	Length		0,000

Name	Member Load case	Type System	Dir Distribution	Value - P_1 [kN/m] Value - P_2 [kN/m]	Pos x_1 Pos x_2	Coor Loc	Orig	Ecc ey Ecc ez
LF2672	B3286	Wind	X	0,069	0.000	Rela	From start	0,000
	Wx - Rüzgar	GCS	Uniform	0,069	1.000	Length		0,000
LF2673	B3287	Wind	X	0,069	0.000	Rela	From start	0,000
	Wx - Rüzgar	GCS	Uniform	0,069	1.000	Length		0,000
LF2674	B3288	Wind	Y	0,069	0.000	Rela	From start	0,000
	Wy - Rüzgar	GCS	Uniform	0,069	1.000	Length		0,000
LF2675	B3290	Wind	Y	0,069	0.000	Rela	From start	0,000
	Wy - Rüzgar	GCS	Uniform	0,069	1.000	Length		0,000
LF2676	B3292	Wind	Y	0,069	0.000	Rela	From start	0,000
	Wy - Rüzgar	GCS	Uniform	0,069	1.000	Length		0,000
LF2677	B3294	Wind	Y	0,069	0.000	Rela	From start	0,000
	Wy - Rüzgar	GCS	Uniform	0,069	1.000	Length		0,000
LF2678	B3296	Wind	Y	0,069	0.000	Rela	From start	0,000
	Wy - Rüzgar	GCS	Uniform	0,069	1.000	Length		0,000
LF2679	B3298	Wind	Y	0,069	0.000	Rela	From start	0,000
	Wy - Rüzgar	GCS	Uniform	0,069	1.000	Length		0,000
LF2680	B3300	Wind	Y	0,069	0.000	Rela	From start	0,000
	Wy - Rüzgar	GCS	Uniform	0,069	1.000	Length		0,000
LF2681	B3302	Wind	X	0,057	0.000	Rela	From start	0,000
	Wx - Rüzgar	GCS	Uniform	0,057	1.000	Length		0,000
LF2682	B3310	Wind	Y	0,069	0.000	Rela	From start	0,000
	Wy - Rüzgar	GCS	Uniform	0,069	1.000	Length		0,000
LF2683	B3313	Wind	Y	0,069	0.000	Rela	From start	0,000
	Wy - Rüzgar	GCS	Uniform	0,069	1.000	Length		0,000
LF2684	B3316	Wind	Y	0,069	0.000	Rela	From start	0,000
	Wy - Rüzgar	GCS	Uniform	0,069	1.000	Length		0,000
LF2685	B3319	Wind	X	0,069	0.000	Rela	From start	0,000
	Wx - Rüzgar	GCS	Uniform	0,069	1.000	Length		0,000
LF2686	B3330	Wind	Y	0,048	0.000	Rela	From start	0,000
	Wy - Rüzgar	GCS	Uniform	0,048	1.000	Length		0,000
LF2687	B3331	Wind	Y	0,048	0.000	Rela	From start	0,000
	Wy - Rüzgar	GCS	Uniform	0,048	1.000	Length		0,000
LF2688	B3332	Wind	Y	0,048	0.000	Rela	From start	0,000
	Wy - Rüzgar	GCS	Uniform	0,048	1.000	Length		0,000
LF2689	B3333	Wind	Y	0,048	0.000	Rela	From start	0,000
	Wy - Rüzgar	GCS	Uniform	0,048	1.000	Length		0,000
LF2690	B3334	Wind	Y	0,048	0.000	Rela	From start	0,000
	Wy - Rüzgar	GCS	Uniform	0,048	1.000	Length		0,000
LF2691	B3335	Wind	Y	0,048	0.000	Rela	From start	0,000
	Wy - Rüzgar	GCS	Uniform	0,048	1.000	Length		0,000
LF2692	B3336	Wind	Y	0,048	0.000	Rela	From start	0,000
	Wy - Rüzgar	GCS	Uniform	0,048	1.000	Length		0,000
LF2693	B3337	Wind	Y	0,048	0.000	Rela	From start	0,000
	Wy - Rüzgar	GCS	Uniform	0,048	1.000	Length		0,000
LF2694	B3338	Wind	Y	0,048	0.000	Rela	From start	0,000
	Wy - Rüzgar	GCS	Uniform	0,048	1.000	Length		0,000
LF2695	B3339	Wind	Y	0,048	0.000	Rela	From start	0,000
	Wy - Rüzgar	GCS	Uniform	0,048	1.000	Length		0,000
LF2696	B3340	Wind	Y	0,048	0.000	Rela	From start	0,000
	Wy - Rüzgar	GCS	Uniform	0,048	1.000	Length		0,000
LF2697	B3341	Wind	Y	0,048	0.000	Rela	From start	0,000
	Wy - Rüzgar	GCS	Uniform	0,048	1.000	Length		0,000
LF2698	B3342	Wind	Y	0,048	0.000	Rela	From start	0,000
	Wy - Rüzgar	GCS	Uniform	0,048	1.000	Length		0,000
LF2699	B3343	Wind	Y	0,048	0.000	Rela	From start	0,000
	Wy - Rüzgar	GCS	Uniform	0,048	1.000	Length		0,000
LF2700	B3344	Wind	Y	0,048	0.000	Rela	From start	0,000
	Wy - Rüzgar	GCS	Uniform	0,048	1.000	Length		0,000
LF2701	B3345	Wind	Y	0,048	0.000	Rela	From start	0,000
	Wy - Rüzgar	GCS	Uniform	0,048	1.000	Length		0,000
LF2702	B3346	Wind	Y	0,048	0.000	Rela	From start	0,000
	Wy - Rüzgar	GCS	Uniform	0,048	1.000	Length		0,000
LF2703	B3347	Wind	Y	0,048	0.000	Rela	From start	0,000
	Wy - Rüzgar	GCS	Uniform	0,048	1.000	Length		0,000
LF2704	B3348	Wind	Y	0,048	0.000	Rela	From start	0,000
	Wy - Rüzgar	GCS	Uniform	0,048	1.000	Length		0,000
LF2705	B3349	Wind	Y	0,048	0.000	Rela	From start	0,000
	Wy - Rüzgar	GCS	Uniform	0,048	1.000	Length		0,000
LF2706	PL942	Wind	Y	0,429	0.000	Rela	From start	0,000
	Wy - Rüzgar	GCS	Uniform	0,429	1.000	Length		0,000
LF2707	PL944	Wind	Y	0,429	0.000	Rela	From start	0,000
	Wy - Rüzgar	GCS	Uniform	0,429	1.000	Length		0,000
LF2708	PL946	Wind	Y	0,429	0.000	Rela	From start	0,000
	Wy - Rüzgar	GCS	Uniform	0,429	1.000	Length		0,000

Name	Member Load case	Type System	Dir Distribution	Value - P_1 [kN/m] Value - P_2 [kN/m]	Pos x_1 Pos x_2	Coor Loc	Orig	Ecc ey Ecc ez
LF2709	PL948	Wind	Y	0,429	0.000	Rela	From start	0,000
	Wy - Rüzgar	GCS	Uniform	0,429	1.000	Length		0,000
LF2710	PL950	Wind	Y	0,429	0.000	Rela	From start	0,000
	Wy - Rüzgar	GCS	Uniform	0,429	1.000	Length		0,000
LF2711	PL952	Wind	Y	0,429	0.000	Rela	From start	0,000
	Wy - Rüzgar	GCS	Uniform	0,429	1.000	Length		0,000
LF2712	PL954	Wind	Y	0,429	0.000	Rela	From start	0,000
	Wy - Rüzgar	GCS	Uniform	0,429	1.000	Length		0,000
LF2713	PL956	Wind	Y	0,429	0.000	Rela	From start	0,000
	Wy - Rüzgar	GCS	Uniform	0,429	1.000	Length		0,000
LF2714	PL958	Wind	Y	0,429	0.000	Rela	From start	0,000
	Wy - Rüzgar	GCS	Uniform	0,429	1.000	Length		0,000
LF2715	PL960	Wind	Y	0,429	0.000	Rela	From start	0,000
	Wy - Rüzgar	GCS	Uniform	0,429	1.000	Length		0,000
LF2716	CP362	Wind	Y	0,054	0.000	Rela	From start	0,000
	Wy - Rüzgar	GCS	Uniform	0,054	1.000	Length		0,000
LF2717	CP363	Wind	Y	0,054	0.000	Rela	From start	0,000
	Wy - Rüzgar	GCS	Uniform	0,054	1.000	Length		0,000
LF2718	CP364	Wind	Y	0,054	0.000	Rela	From start	0,000
	Wy - Rüzgar	GCS	Uniform	0,054	1.000	Length		0,000
LF2719	CP365	Wind	Y	0,054	0.000	Rela	From start	0,000
	Wy - Rüzgar	GCS	Uniform	0,054	1.000	Length		0,000
LF2720	CP366	Wind	Y	0,054	0.000	Rela	From start	0,000
	Wy - Rüzgar	GCS	Uniform	0,054	1.000	Length		0,000
LF2721	CP367	Wind	Y	0,054	0.000	Rela	From start	0,000
	Wy - Rüzgar	GCS	Uniform	0,054	1.000	Length		0,000
LF2722	B3350	Wind	Y	0,069	0.000	Rela	From start	0,000
	Wy - Rüzgar	GCS	Uniform	0,069	1.000	Length		0,000
LF2723	B3350	Wind	X	0,069	0.000	Rela	From start	0,000
	Wx - Rüzgar	GCS	Uniform	0,069	1.000	Length		0,000
LF2724	B3351	Wind	X	0,069	0.000	Rela	From start	0,000
	Wx - Rüzgar	GCS	Uniform	0,069	1.000	Length		0,000
LF2725	B3352	Wind	Y	0,069	0.000	Rela	From start	0,000
	Wy - Rüzgar	GCS	Uniform	0,069	1.000	Length		0,000
LF2726	B3354	Wind	Y	0,069	0.000	Rela	From start	0,000
	Wy - Rüzgar	GCS	Uniform	0,069	1.000	Length		0,000
LF2727	B3356	Wind	Y	0,069	0.000	Rela	From start	0,000
	Wy - Rüzgar	GCS	Uniform	0,069	1.000	Length		0,000
LF2728	B3358	Wind	Y	0,069	0.000	Rela	From start	0,000
	Wy - Rüzgar	GCS	Uniform	0,069	1.000	Length		0,000
LF2729	B3360	Wind	Y	0,069	0.000	Rela	From start	0,000
	Wy - Rüzgar	GCS	Uniform	0,069	1.000	Length		0,000
LF2730	B3362	Wind	Y	0,069	0.000	Rela	From start	0,000
	Wy - Rüzgar	GCS	Uniform	0,069	1.000	Length		0,000
LF2731	B3364	Wind	Y	0,069	0.000	Rela	From start	0,000
	Wy - Rüzgar	GCS	Uniform	0,069	1.000	Length		0,000
LF2732	B3366	Wind	X	0,057	0.000	Rela	From start	0,000
	Wx - Rüzgar	GCS	Uniform	0,057	1.000	Length		0,000
LF2733	B3374	Wind	Y	0,069	0.000	Rela	From start	0,000
	Wy - Rüzgar	GCS	Uniform	0,069	1.000	Length		0,000
LF2734	B3377	Wind	Y	0,069	0.000	Rela	From start	0,000
	Wy - Rüzgar	GCS	Uniform	0,069	1.000	Length		0,000
LF2735	B3380	Wind	Y	0,069	0.000	Rela	From start	0,000
	Wy - Rüzgar	GCS	Uniform	0,069	1.000	Length		0,000
LF2736	B3383	Wind	X	0,069	0.000	Rela	From start	0,000
	Wx - Rüzgar	GCS	Uniform	0,069	1.000	Length		0,000
LF2737	B3394	Wind	Y	0,048	0.000	Rela	From start	0,000
	Wy - Rüzgar	GCS	Uniform	0,048	1.000	Length		0,000
LF2738	B3395	Wind	Y	0,048	0.000	Rela	From start	0,000
	Wy - Rüzgar	GCS	Uniform	0,048	1.000	Length		0,000
LF2739	B3396	Wind	Y	0,048	0.000	Rela	From start	0,000
	Wy - Rüzgar	GCS	Uniform	0,048	1.000	Length		0,000
LF2740	B3397	Wind	Y	0,048	0.000	Rela	From start	0,000
	Wy - Rüzgar	GCS	Uniform	0,048	1.000	Length		0,000
LF2741	B3398	Wind	Y	0,048	0.000	Rela	From start	0,000
	Wy - Rüzgar	GCS	Uniform	0,048	1.000	Length		0,000
LF2742	B3399	Wind	Y	0,048	0.000	Rela	From start	0,000
	Wy - Rüzgar	GCS	Uniform	0,048	1.000	Length		0,000
LF2743	B3400	Wind	Y	0,048	0.000	Rela	From start	0,000
	Wy - Rüzgar	GCS	Uniform	0,048	1.000	Length		0,000
LF2744	B3401	Wind	Y	0,048	0.000	Rela	From start	0,000
	Wy - Rüzgar	GCS	Uniform	0,048	1.000	Length		0,000
LF2745	B3402	Wind	Y	0,048	0.000	Rela	From start	0,000
	Wy - Rüzgar	GCS	Uniform	0,048	1.000	Length		0,000

Name	Member Load case	Type System	Dir Distribution	Value - P_1 [kN/m] Value - P_2 [kN/m]	Pos x_1 Pos x_2	Coor Loc	Orig	Ecc ey Ecc ez
LF2746	B3403	Wind	Y	0,048	0.000	Rela	From start	0,000
	Wy - Rüzgar	GCS	Uniform	0,048	1.000	Length		0,000
LF2747	B3404	Wind	Y	0,048	0.000	Rela	From start	0,000
	Wy - Rüzgar	GCS	Uniform	0,048	1.000	Length		0,000
LF2748	B3405	Wind	Y	0,048	0.000	Rela	From start	0,000
	Wy - Rüzgar	GCS	Uniform	0,048	1.000	Length		0,000
LF2749	B3406	Wind	Y	0,048	0.000	Rela	From start	0,000
	Wy - Rüzgar	GCS	Uniform	0,048	1.000	Length		0,000
LF2750	B3407	Wind	Y	0,048	0.000	Rela	From start	0,000
	Wy - Rüzgar	GCS	Uniform	0,048	1.000	Length		0,000
LF2751	B3408	Wind	Y	0,048	0.000	Rela	From start	0,000
	Wy - Rüzgar	GCS	Uniform	0,048	1.000	Length		0,000
LF2752	B3409	Wind	Y	0,048	0.000	Rela	From start	0,000
	Wy - Rüzgar	GCS	Uniform	0,048	1.000	Length		0,000
LF2753	B3410	Wind	Y	0,048	0.000	Rela	From start	0,000
	Wy - Rüzgar	GCS	Uniform	0,048	1.000	Length		0,000
LF2754	B3411	Wind	Y	0,048	0.000	Rela	From start	0,000
	Wy - Rüzgar	GCS	Uniform	0,048	1.000	Length		0,000
LF2755	B3412	Wind	Y	0,048	0.000	Rela	From start	0,000
	Wy - Rüzgar	GCS	Uniform	0,048	1.000	Length		0,000
LF2756	B3413	Wind	Y	0,048	0.000	Rela	From start	0,000
	Wy - Rüzgar	GCS	Uniform	0,048	1.000	Length		0,000
LF2757	PL962	Wind	Y	0,429	0.000	Rela	From start	0,000
	Wy - Rüzgar	GCS	Uniform	0,429	1.000	Length		0,000
LF2758	PL964	Wind	Y	0,429	0.000	Rela	From start	0,000
	Wy - Rüzgar	GCS	Uniform	0,429	1.000	Length		0,000
LF2759	PL966	Wind	Y	0,429	0.000	Rela	From start	0,000
	Wy - Rüzgar	GCS	Uniform	0,429	1.000	Length		0,000
LF2760	PL968	Wind	Y	0,429	0.000	Rela	From start	0,000
	Wy - Rüzgar	GCS	Uniform	0,429	1.000	Length		0,000
LF2761	PL970	Wind	Y	0,429	0.000	Rela	From start	0,000
	Wy - Rüzgar	GCS	Uniform	0,429	1.000	Length		0,000
LF2762	PL972	Wind	Y	0,429	0.000	Rela	From start	0,000
	Wy - Rüzgar	GCS	Uniform	0,429	1.000	Length		0,000
LF2763	PL974	Wind	Y	0,429	0.000	Rela	From start	0,000
	Wy - Rüzgar	GCS	Uniform	0,429	1.000	Length		0,000
LF2764	PL976	Wind	Y	0,429	0.000	Rela	From start	0,000
	Wy - Rüzgar	GCS	Uniform	0,429	1.000	Length		0,000
LF2765	PL978	Wind	Y	0,429	0.000	Rela	From start	0,000
	Wy - Rüzgar	GCS	Uniform	0,429	1.000	Length		0,000
LF2766	PL980	Wind	Y	0,429	0.000	Rela	From start	0,000
	Wy - Rüzgar	GCS	Uniform	0,429	1.000	Length		0,000
LF2767	CP368	Wind	Y	0,054	0.000	Rela	From start	0,000
	Wy - Rüzgar	GCS	Uniform	0,054	1.000	Length		0,000
LF2768	CP369	Wind	Y	0,054	0.000	Rela	From start	0,000
	Wy - Rüzgar	GCS	Uniform	0,054	1.000	Length		0,000
LF2769	CP370	Wind	Y	0,054	0.000	Rela	From start	0,000
	Wy - Rüzgar	GCS	Uniform	0,054	1.000	Length		0,000
LF2770	CP371	Wind	Y	0,054	0.000	Rela	From start	0,000
	Wy - Rüzgar	GCS	Uniform	0,054	1.000	Length		0,000
LF2771	CP372	Wind	Y	0,054	0.000	Rela	From start	0,000
	Wy - Rüzgar	GCS	Uniform	0,054	1.000	Length		0,000
LF2772	CP373	Wind	Y	0,054	0.000	Rela	From start	0,000
	Wy - Rüzgar	GCS	Uniform	0,054	1.000	Length		0,000
LF2773	B3414	Wind	Y	0,069	0.000	Rela	From start	0,000
	Wy - Rüzgar	GCS	Uniform	0,069	1.000	Length		0,000
LF2774	B3414	Wind	X	0,069	0.000	Rela	From start	0,000
	Wx - Rüzgar	GCS	Uniform	0,069	1.000	Length		0,000
LF2775	B3415	Wind	X	0,069	0.000	Rela	From start	0,000
	Wx - Rüzgar	GCS	Uniform	0,069	1.000	Length		0,000
LF2776	B3416	Wind	Y	0,069	0.000	Rela	From start	0,000
	Wy - Rüzgar	GCS	Uniform	0,069	1.000	Length		0,000
LF2777	B3418	Wind	Y	0,069	0.000	Rela	From start	0,000
	Wy - Rüzgar	GCS	Uniform	0,069	1.000	Length		0,000
LF2778	B3420	Wind	Y	0,069	0.000	Rela	From start	0,000
	Wy - Rüzgar	GCS	Uniform	0,069	1.000	Length		0,000
LF2779	B3422	Wind	Y	0,069	0.000	Rela	From start	0,000
	Wy - Rüzgar	GCS	Uniform	0,069	1.000	Length		0,000
LF2780	B3424	Wind	Y	0,069	0.000	Rela	From start	0,000
	Wy - Rüzgar	GCS	Uniform	0,069	1.000	Length		0,000
LF2781	B3426	Wind	Y	0,069	0.000	Rela	From start	0,000
	Wy - Rüzgar	GCS	Uniform	0,069	1.000	Length		0,000
LF2782	B3428	Wind	Y	0,069	0.000	Rela	From start	0,000
	Wy - Rüzgar	GCS	Uniform	0,069	1.000	Length		0,000

Name	Member Load case	Type System	Dir Distribution	Value - P_1 [kN/m] Value - P_2 [kN/m]	Pos x_1 Pos x_2	Coor Loc	Orig	Ecc ey Ecc ez
LF2783	B3430	Wind	X	0,057	0.000	Rela	From start	0,000
	Wx - Rüzgar	GCS	Uniform	0,057	1.000	Length		0,000
LF2784	B3438	Wind	Y	0,069	0.000	Rela	From start	0,000
	Wy - Rüzgar	GCS	Uniform	0,069	1.000	Length		0,000
LF2785	B3441	Wind	Y	0,069	0.000	Rela	From start	0,000
	Wy - Rüzgar	GCS	Uniform	0,069	1.000	Length		0,000
LF2786	B3444	Wind	Y	0,069	0.000	Rela	From start	0,000
	Wy - Rüzgar	GCS	Uniform	0,069	1.000	Length		0,000
LF2787	B3447	Wind	X	0,069	0.000	Rela	From start	0,000
	Wx - Rüzgar	GCS	Uniform	0,069	1.000	Length		0,000
LF2788	B3458	Wind	Y	0,048	0.000	Rela	From start	0,000
	Wy - Rüzgar	GCS	Uniform	0,048	1.000	Length		0,000
LF2789	B3459	Wind	Y	0,048	0.000	Rela	From start	0,000
	Wy - Rüzgar	GCS	Uniform	0,048	1.000	Length		0,000
LF2790	B3460	Wind	Y	0,048	0.000	Rela	From start	0,000
	Wy - Rüzgar	GCS	Uniform	0,048	1.000	Length		0,000
LF2791	B3461	Wind	Y	0,048	0.000	Rela	From start	0,000
	Wy - Rüzgar	GCS	Uniform	0,048	1.000	Length		0,000
LF2792	B3462	Wind	Y	0,048	0.000	Rela	From start	0,000
	Wy - Rüzgar	GCS	Uniform	0,048	1.000	Length		0,000
LF2793	B3463	Wind	Y	0,048	0.000	Rela	From start	0,000
	Wy - Rüzgar	GCS	Uniform	0,048	1.000	Length		0,000
LF2794	B3464	Wind	Y	0,048	0.000	Rela	From start	0,000
	Wy - Rüzgar	GCS	Uniform	0,048	1.000	Length		0,000
LF2795	B3465	Wind	Y	0,048	0.000	Rela	From start	0,000
	Wy - Rüzgar	GCS	Uniform	0,048	1.000	Length		0,000
LF2796	B3466	Wind	Y	0,048	0.000	Rela	From start	0,000
	Wy - Rüzgar	GCS	Uniform	0,048	1.000	Length		0,000
LF2797	B3467	Wind	Y	0,048	0.000	Rela	From start	0,000
	Wy - Rüzgar	GCS	Uniform	0,048	1.000	Length		0,000
LF2798	B3468	Wind	Y	0,048	0.000	Rela	From start	0,000
	Wy - Rüzgar	GCS	Uniform	0,048	1.000	Length		0,000
LF2799	B3469	Wind	Y	0,048	0.000	Rela	From start	0,000
	Wy - Rüzgar	GCS	Uniform	0,048	1.000	Length		0,000
LF2800	B3470	Wind	Y	0,048	0.000	Rela	From start	0,000
	Wy - Rüzgar	GCS	Uniform	0,048	1.000	Length		0,000
LF2801	B3471	Wind	Y	0,048	0.000	Rela	From start	0,000
	Wy - Rüzgar	GCS	Uniform	0,048	1.000	Length		0,000
LF2802	B3472	Wind	Y	0,048	0.000	Rela	From start	0,000
	Wy - Rüzgar	GCS	Uniform	0,048	1.000	Length		0,000
LF2803	B3473	Wind	Y	0,048	0.000	Rela	From start	0,000
	Wy - Rüzgar	GCS	Uniform	0,048	1.000	Length		0,000
LF2804	B3474	Wind	Y	0,048	0.000	Rela	From start	0,000
	Wy - Rüzgar	GCS	Uniform	0,048	1.000	Length		0,000
LF2805	B3475	Wind	Y	0,048	0.000	Rela	From start	0,000
	Wy - Rüzgar	GCS	Uniform	0,048	1.000	Length		0,000
LF2806	B3476	Wind	Y	0,048	0.000	Rela	From start	0,000
	Wy - Rüzgar	GCS	Uniform	0,048	1.000	Length		0,000
LF2807	B3477	Wind	Y	0,048	0.000	Rela	From start	0,000
	Wy - Rüzgar	GCS	Uniform	0,048	1.000	Length		0,000
LF2808	PL982	Wind	Y	0,429	0.000	Rela	From start	0,000
	Wy - Rüzgar	GCS	Uniform	0,429	1.000	Length		0,000
LF2809	PL984	Wind	Y	0,429	0.000	Rela	From start	0,000
	Wy - Rüzgar	GCS	Uniform	0,429	1.000	Length		0,000
LF2810	PL986	Wind	Y	0,429	0.000	Rela	From start	0,000
	Wy - Rüzgar	GCS	Uniform	0,429	1.000	Length		0,000
LF2811	PL988	Wind	Y	0,429	0.000	Rela	From start	0,000
	Wy - Rüzgar	GCS	Uniform	0,429	1.000	Length		0,000
LF2812	PL990	Wind	Y	0,429	0.000	Rela	From start	0,000
	Wy - Rüzgar	GCS	Uniform	0,429	1.000	Length		0,000
LF2813	PL992	Wind	Y	0,429	0.000	Rela	From start	0,000
	Wy - Rüzgar	GCS	Uniform	0,429	1.000	Length		0,000
LF2814	PL994	Wind	Y	0,429	0.000	Rela	From start	0,000
	Wy - Rüzgar	GCS	Uniform	0,429	1.000	Length		0,000
LF2815	PL996	Wind	Y	0,429	0.000	Rela	From start	0,000
	Wy - Rüzgar	GCS	Uniform	0,429	1.000	Length		0,000
LF2816	PL998	Wind	Y	0,429	0.000	Rela	From start	0,000
	Wy - Rüzgar	GCS	Uniform	0,429	1.000	Length		0,000
LF2817	PL1000	Wind	Y	0,429	0.000	Rela	From start	0,000
	Wy - Rüzgar	GCS	Uniform	0,429	1.000	Length		0,000
LF2818	CP374	Wind	Y	0,054	0.000	Rela	From start	0,000
	Wy - Rüzgar	GCS	Uniform	0,054	1.000	Length		0,000
LF2819	CP375	Wind	Y	0,054	0.000	Rela	From start	0,000
	Wy - Rüzgar	GCS	Uniform	0,054	1.000	Length		0,000

Name	Member Load case	Type System	Dir Distribution	Value - P_1 [kN/m] Value - P_2 [kN/m]	Pos x_1 Pos x_2	Coor Loc	Orig	Ecc ey Ecc ez
LF2820	CP376	Wind	Y	0,054	0.000	Rela	From start	0,000
	Wy - Rüzgar	GCS	Uniform	0,054	1.000	Length		0,000
LF2821	CP377	Wind	Y	0,054	0.000	Rela	From start	0,000
	Wy - Rüzgar	GCS	Uniform	0,054	1.000	Length		0,000
LF2822	CP378	Wind	Y	0,054	0.000	Rela	From start	0,000
	Wy - Rüzgar	GCS	Uniform	0,054	1.000	Length		0,000
LF2823	CP379	Wind	Y	0,054	0.000	Rela	From start	0,000
	Wy - Rüzgar	GCS	Uniform	0,054	1.000	Length		0,000
LF2824	B3478	Wind	Y	0,069	0.000	Rela	From start	0,000
	Wy - Rüzgar	GCS	Uniform	0,069	1.000	Length		0,000
LF2825	B3478	Wind	X	0,069	0.000	Rela	From start	0,000
	Wx - Rüzgar	GCS	Uniform	0,069	1.000	Length		0,000
LF2826	B3479	Wind	X	0,069	0.000	Rela	From start	0,000
	Wx - Rüzgar	GCS	Uniform	0,069	1.000	Length		0,000
LF2827	B3480	Wind	Y	0,069	0.000	Rela	From start	0,000
	Wy - Rüzgar	GCS	Uniform	0,069	1.000	Length		0,000
LF2828	B3482	Wind	Y	0,069	0.000	Rela	From start	0,000
	Wy - Rüzgar	GCS	Uniform	0,069	1.000	Length		0,000
LF2829	B3484	Wind	Y	0,069	0.000	Rela	From start	0,000
	Wy - Rüzgar	GCS	Uniform	0,069	1.000	Length		0,000
LF2830	B3486	Wind	Y	0,069	0.000	Rela	From start	0,000
	Wy - Rüzgar	GCS	Uniform	0,069	1.000	Length		0,000
LF2831	B3488	Wind	Y	0,069	0.000	Rela	From start	0,000
	Wy - Rüzgar	GCS	Uniform	0,069	1.000	Length		0,000
LF2832	B3490	Wind	Y	0,069	0.000	Rela	From start	0,000
	Wy - Rüzgar	GCS	Uniform	0,069	1.000	Length		0,000
LF2833	B3492	Wind	Y	0,069	0.000	Rela	From start	0,000
	Wy - Rüzgar	GCS	Uniform	0,069	1.000	Length		0,000
LF2834	B3494	Wind	X	0,057	0.000	Rela	From start	0,000
	Wx - Rüzgar	GCS	Uniform	0,057	1.000	Length		0,000
LF2835	B3502	Wind	Y	0,069	0.000	Rela	From start	0,000
	Wy - Rüzgar	GCS	Uniform	0,069	1.000	Length		0,000
LF2836	B3505	Wind	Y	0,069	0.000	Rela	From start	0,000
	Wy - Rüzgar	GCS	Uniform	0,069	1.000	Length		0,000
LF2837	B3508	Wind	Y	0,069	0.000	Rela	From start	0,000
	Wy - Rüzgar	GCS	Uniform	0,069	1.000	Length		0,000
LF2838	B3511	Wind	X	0,069	0.000	Rela	From start	0,000
	Wx - Rüzgar	GCS	Uniform	0,069	1.000	Length		0,000
LF2839	B3522	Wind	Y	0,048	0.000	Rela	From start	0,000
	Wy - Rüzgar	GCS	Uniform	0,048	1.000	Length		0,000
LF2840	B3523	Wind	Y	0,048	0.000	Rela	From start	0,000
	Wy - Rüzgar	GCS	Uniform	0,048	1.000	Length		0,000
LF2841	B3524	Wind	Y	0,048	0.000	Rela	From start	0,000
	Wy - Rüzgar	GCS	Uniform	0,048	1.000	Length		0,000
LF2842	B3525	Wind	Y	0,048	0.000	Rela	From start	0,000
	Wy - Rüzgar	GCS	Uniform	0,048	1.000	Length		0,000
LF2843	B3526	Wind	Y	0,048	0.000	Rela	From start	0,000
	Wy - Rüzgar	GCS	Uniform	0,048	1.000	Length		0,000
LF2844	B3527	Wind	Y	0,048	0.000	Rela	From start	0,000
	Wy - Rüzgar	GCS	Uniform	0,048	1.000	Length		0,000
LF2845	B3528	Wind	Y	0,048	0.000	Rela	From start	0,000
	Wy - Rüzgar	GCS	Uniform	0,048	1.000	Length		0,000
LF2846	B3529	Wind	Y	0,048	0.000	Rela	From start	0,000
	Wy - Rüzgar	GCS	Uniform	0,048	1.000	Length		0,000
LF2847	B3530	Wind	Y	0,048	0.000	Rela	From start	0,000
	Wy - Rüzgar	GCS	Uniform	0,048	1.000	Length		0,000
LF2848	B3531	Wind	Y	0,048	0.000	Rela	From start	0,000
	Wy - Rüzgar	GCS	Uniform	0,048	1.000	Length		0,000
LF2849	B3532	Wind	Y	0,048	0.000	Rela	From start	0,000
	Wy - Rüzgar	GCS	Uniform	0,048	1.000	Length		0,000
LF2850	B3533	Wind	Y	0,048	0.000	Rela	From start	0,000
	Wy - Rüzgar	GCS	Uniform	0,048	1.000	Length		0,000
LF2851	B3534	Wind	Y	0,048	0.000	Rela	From start	0,000
	Wy - Rüzgar	GCS	Uniform	0,048	1.000	Length		0,000
LF2852	B3535	Wind	Y	0,048	0.000	Rela	From start	0,000
	Wy - Rüzgar	GCS	Uniform	0,048	1.000	Length		0,000
LF2853	B3536	Wind	Y	0,048	0.000	Rela	From start	0,000
	Wy - Rüzgar	GCS	Uniform	0,048	1.000	Length		0,000
LF2854	B3537	Wind	Y	0,048	0.000	Rela	From start	0,000
	Wy - Rüzgar	GCS	Uniform	0,048	1.000	Length		0,000
LF2855	B3538	Wind	Y	0,048	0.000	Rela	From start	0,000
	Wy - Rüzgar	GCS	Uniform	0,048	1.000	Length		0,000
LF2856	B3539	Wind	Y	0,048	0.000	Rela	From start	0,000
	Wy - Rüzgar	GCS	Uniform	0,048	1.000	Length		0,000

Name	Member Load case	Type System	Dir Distribution	Value - P_1 [kN/m] Value - P_2 [kN/m]	Pos x_1 Pos x_2	Coor Loc	Orig	Ecc ey Ecc ez
LF2857	B3540	Wind	Y	0,048	0.000	Rela	From start	0,000
	Wy - Rüzgar	GCS	Uniform	0,048	1.000	Length		0,000
LF2858	B3541	Wind	Y	0,048	0.000	Rela	From start	0,000
	Wy - Rüzgar	GCS	Uniform	0,048	1.000	Length		0,000
LF2859	PL1002	Wind	Y	0,429	0.000	Rela	From start	0,000
	Wy - Rüzgar	GCS	Uniform	0,429	1.000	Length		0,000
LF2860	PL1004	Wind	Y	0,429	0.000	Rela	From start	0,000
	Wy - Rüzgar	GCS	Uniform	0,429	1.000	Length		0,000
LF2861	PL1006	Wind	Y	0,429	0.000	Rela	From start	0,000
	Wy - Rüzgar	GCS	Uniform	0,429	1.000	Length		0,000
LF2862	PL1008	Wind	Y	0,429	0.000	Rela	From start	0,000
	Wy - Rüzgar	GCS	Uniform	0,429	1.000	Length		0,000
LF2863	PL1010	Wind	Y	0,429	0.000	Rela	From start	0,000
	Wy - Rüzgar	GCS	Uniform	0,429	1.000	Length		0,000
LF2864	PL1012	Wind	Y	0,429	0.000	Rela	From start	0,000
	Wy - Rüzgar	GCS	Uniform	0,429	1.000	Length		0,000
LF2865	PL1014	Wind	Y	0,429	0.000	Rela	From start	0,000
	Wy - Rüzgar	GCS	Uniform	0,429	1.000	Length		0,000
LF2866	PL1016	Wind	Y	0,429	0.000	Rela	From start	0,000
	Wy - Rüzgar	GCS	Uniform	0,429	1.000	Length		0,000
LF2867	PL1018	Wind	Y	0,429	0.000	Rela	From start	0,000
	Wy - Rüzgar	GCS	Uniform	0,429	1.000	Length		0,000
LF2868	PL1020	Wind	Y	0,429	0.000	Rela	From start	0,000
	Wy - Rüzgar	GCS	Uniform	0,429	1.000	Length		0,000
LF2869	CP380	Wind	Y	0,054	0.000	Rela	From start	0,000
	Wy - Rüzgar	GCS	Uniform	0,054	1.000	Length		0,000
LF2870	CP381	Wind	Y	0,054	0.000	Rela	From start	0,000
	Wy - Rüzgar	GCS	Uniform	0,054	1.000	Length		0,000
LF2871	CP382	Wind	Y	0,054	0.000	Rela	From start	0,000
	Wy - Rüzgar	GCS	Uniform	0,054	1.000	Length		0,000
LF2872	CP383	Wind	Y	0,054	0.000	Rela	From start	0,000
	Wy - Rüzgar	GCS	Uniform	0,054	1.000	Length		0,000
LF2873	CP384	Wind	Y	0,054	0.000	Rela	From start	0,000
	Wy - Rüzgar	GCS	Uniform	0,054	1.000	Length		0,000
LF2874	CP385	Wind	Y	0,054	0.000	Rela	From start	0,000
	Wy - Rüzgar	GCS	Uniform	0,054	1.000	Length		0,000

15. ANALİZ

Combination key

Name	Description of combinations
1	SW*1,35 +SL*1,50 +Wx_Çalışma*0,90
2	SW*1,35 +SL*1,50 +Wy_çalışma*0,90
3	SW*1,35 +SL*1,50
4	SW*1,00 +SL*1,00
5	SW*1,00 +SL*1,00 +Wx_Çalışma*1,00
6	SW*1,00 +Wy*1,00 +SL1*1,00
7	SW*1,00 +SL*1,00 +Wy_çalışma*1,00
8	SW*1,00 +Wx*1,00 +SL1*1,00
9	SW*1,35 +Wy*0,90 +SL1*1,50

15.1. Elemanlardaki iç kuvvetler

Linear calculation, Extreme : Global, System : Principal
Selection : All
Class : ULS1

Member	css	dx [mm]	Case	N [kN]	Vy [kN]	Vz [kN]	Mx [kNm]	My [kNm]	Mz [kNm]
C34	DİKME - CFCHS48.3X3	0,000	CO5/1	**-36,627**	-0,002	0,000	0,000	0,000	0,000
B491	ALT_PROFIL - RHS	0,000	CO4/2	**2,632**	-0,007	3,537	0,002	-0,476	0,002
B144	DİKME - CFCHS48.3X3	0,000	CO5/1	-2,209	**-2,535**	0,000	0,000	0,000	0,259
B468	DİKME - CFCHS48.3X3	110,000	CO4/2	-2,518	**2,587**	0,156	-0,008	0,025	-0,033
B275	ALT_PROFIL - RHS	700,000	CO4/2	2,381	0,003	**-3,738**	0,001	**-0,525**	0,001
B551	ALT_PROFIL - RHS	0,000	CO5/1	2,494	0,037	**3,612**	-0,002	-0,484	-0,008
B527	DİKME - CFCHS48.3X3	110,001	CO5/1	-5,451	0,015	1,218	**-0,049**	-0,026	0,013
B35	DİKME - CFCHS48.3X3	110,001	CO3/3	-5,472	0,015	-1,187	**0,048**	0,027	0,012
PL201	Platform - General cross-section	1249,990	CO3/3	-0,010	0,030	0,000	0,000	**1,128**	0,020
B132	DİKME - CFCHS48.3X3	0,000	CO4/2	-2,535	2,546	0,014	0,001	-0,001	**-0,323**
B72	DİKME - CFCHS48.3X3	0,000	CO5/1	-2,122	-2,519	-0,014	0,002	0,001	**0,263**

15.2. Deplasmanlar - SLS

Linear calculation, Extreme : Global
Selection : All
Class : All SLS

Node	Case	Ux [mm]	Uy [mm]	Uz [mm]
N1583	CO13/4	**-0,3**	0,1	-12,9
N1525	CO15/5	**0,4**	0,1	-12,9
N1291	CO12/6	0,0	**-0,4**	-11,8
N1244	CO12/6	0,0	**11,8**	-12,2
N1244	CO14/7	0,0	3,0	**-16,0**
N1301	CO11/8	0,0	0,0	**0,0**

15.3. Deplasmanlar NC-SLS

Nonlinear calculation, Extreme : Global
Selection : All
Class : NC SLS

Node	Case	Ux [mm]	Uy [mm]	Uz [mm]
N1583	NC13	**-0,4**	0,1	-12,9
N1525	NC15	**0,4**	0,1	-12,9
N1291	NC12	0,0	**-0,4**	-11,8
N1024	NC12	0,0	**16,0**	-0,6
N1244	NC14	0,0	3,2	**-16,0**
N1357	NC12	0,0	3,2	**0,0**

NEMETSCHEK
Scia

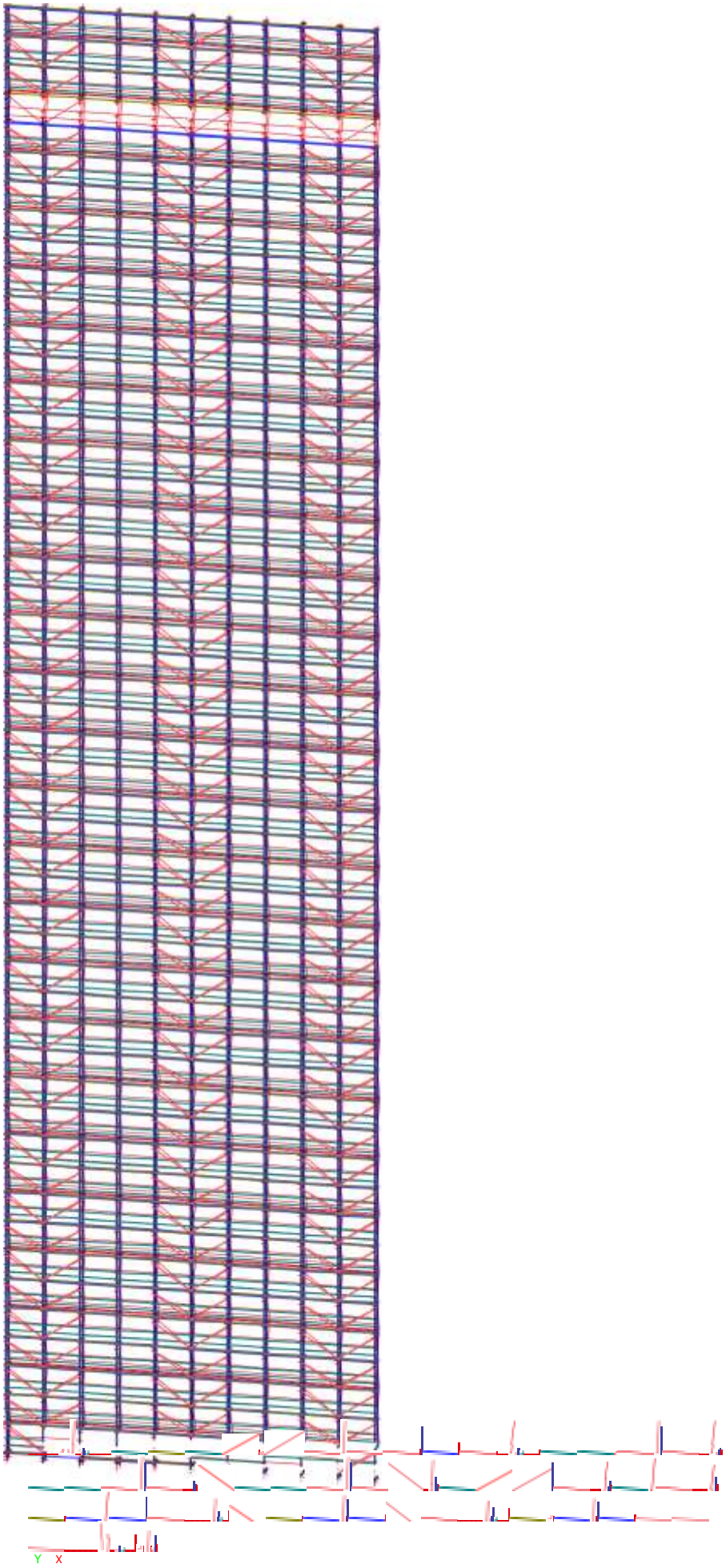
Y X

16. ÇELİK ELEMANLARIN TASARIMI

Nonlinear calculation, Extreme : Global
Selection : All
Class : NC ULS
Cross-section : DİKME - CFCHS48.3X3

Member B1312	**2,000 m**	**CFCHS48.3X3**	**S 235**	**NC8**	**0,57 -**

Partial safety factors	
Gamma M0 for resistance of cross-sections	1,00
Gamma M1 for resistance to instability	1,00
Gamma M2 for resistance of net sections	1,25

Material		
Yield strength fy	235,0	MPa
Ultimate strength fu	360,0	MPa
Fabrication	Rolled	

...::SECTION CHECK::...

The critical check is on position 0.110 m

Internal forces	Calculated	Unit
N,Ed	-20,179	kN
Vy,Ed	-0,855	kN
Vz,Ed	-0,002	kN
T,Ed	0,000	kNm
My,Ed	0,000	kNm
Mz,Ed	0,726	kNm

Scaffolding check for tubular members
According to EN 12811-1:2003, art. 10.3.3.2 and equation 9

Table of values		
Npl.d	100,345	kN
Vpl.d	36,882	kN
Mpl.d	1,337	kNm
Unity check N	0,20	
Unity check V	0,03	
Unity check M	0,54	
Unity check Interaction	0,57	
Unity check Max	0,57	-

The member satisfies the section check.

Nonlinear calculation, Extreme : Global
Selection : All
Class : NC ULS
Cross-section : YATAY - CHS (34,0; 2,5)

Member B1056	**2,500 m**	**CHS (34,0; 2,5)**	**S 235**	**NC8**	**0,08 -**

Partial safety factors	
Gamma M0 for resistance of cross-sections	1,00
Gamma M1 for resistance to instability	1,00
Gamma M2 for resistance of net sections	1,25

Material		
Yield strength fy	235,0	MPa
Ultimate strength fu	360,0	MPa
Fabrication	Rolled	

...::SECTION CHECK::...

The critical check is on position 1.250 m

Internal forces	Calculated	Unit
N,Ed	-0,252	kN
Vy,Ed	0,000	kN
Vz,Ed	0,000	kN
T,Ed	0,000	kNm
My,Ed	0,021	kNm
Mz,Ed	-0,039	kNm

Scaffolding check for tubular members
According to EN 12811-1 & DIN 4420 Teil 1 art. 5.4.7.4 and table 7

Table of values		
Npl.d	58,139	kN
Vpl.d	21,369	kN
Mpl.d	0,534	kNm
Unity check N	0,00	
Unity check V	0,00	
Unity check M	0,08	
Unity check Interaction	0,08	
Unity check Max	0,08	-

The member satisfies the section check.

Nonlinear calculation, Extreme : Global
Selection : All
Class : NC ULS
Cross-section : DIYAGONAL - CHS (38,0; 2,5)

Member CP178	**2,957 m**	**CHS (38,0; 2,5)**	**S 235**	**NC8**	**0,14 -**

Partial safety factors	
Gamma M0 for resistance of cross-sections	1,00
Gamma M1 for resistance to instability	1,00
Gamma M2 for resistance of net sections	1,25

Material		
Yield strength fy	235,0	MPa
Ultimate strength fu	360,0	MPa
Fabrication	Rolled	

...::SECTION CHECK::...

The critical check is on position 0.000 m

Internal forces	Calculated	Unit
N,Ed	0,219	kN
Vy,Ed	0,118	kN
Vz,Ed	0,035	kN
T,Ed	-0,006	kNm
My,Ed	0,000	kNm
Mz,Ed	-0,098	kNm

Scaffolding check for tubular members
According to EN 12811-1 & DIN 4420 Teil 1 art. 5.4.7.4 and table 7

Table of values		
Npl.d	65,522	kN
Vpl.d	24,083	kN
Mpl.d	0,682	kNm
Unity check N	0,00	
Unity check V	0,01	
Unity check M	0,14	
Unity check Interaction	0,14	
Unity check Max	0,14	-

The member satisfies the section check.

Nonlinear calculation, Extreme : Global
Selection : All
Class : NC ULS
Cross-section : ÜST_PROFIL - RHS (40,0; 50,0; 2,0; 0,1; 0,1)

Member B763	**0,700 m**	**RHS (40,0; 50,0; 2,0; 0,1; 0,1)**	**S 235**	**NC8**	**0,40 -**

Partial safety factors	
Gamma M0 for resistance of cross-sections	1,00
Gamma M1 for resistance to instability	1,00
Gamma M2 for resistance of net sections	1,25

Material		
Yield strength fy	235,0	MPa
Ultimate strength fu	360,0	MPa
Fabrication	Rolled	

...::SECTION CHECK::...

Classification for cross-section design
According to EN 1993-1-1 article 5.5.2
Classification of Internal Compression parts
According to EN 1993-1-1 Table 5.2 Sheet 1

Maximum width-to-thickness ratio	22,00
Class 1 Limit	33,00
Class 2 Limit	38,00
Class 3 Limit	42,00

=> Section classified as Class 1 for cross-section design

The critical check is on position 0.000 m

Internal forces	Calculated	Unit
N,Ed	-0,524	kN
Vy,Ed	0,000	kN
Vz,Ed	-1,314	kN
T,Ed	0,000	kNm
My,Ed	0,469	kNm
Mz,Ed	0,000	kNm

Compression check
According to EN 1993-1-1 article 6.2.4 and formula (6.9)

A	3,4400e-04	m^2
Nc,Rd	80,840	kN
Unity check	0,01	-

Bending moment check for My
According to EN 1993-1-1 article 6.2.5 and formula (6.12),(6.13)

Wpl,y	5,0960e-06	m^3
Mpl,y,Rd	1,198	kNm
Unity check	0,39	-

Bending moment check for Mz
According to EN 1993-1-1 article 6.2.5 and formula (6.12),(6.13)

Wpl,z	5,9560e-06	m^3
Mpl,z,Rd	1,400	kNm
Unity check	0,00	-

Shear check for Vz
According to EN 1993-1-1 article 6.2.6 and formula (6.17)

Eta	1,20	
Av	1,5289e-04	m^2
Vpl,z,Rd	20,744	kN
Unity check	0,06	-

Combined bending, axial force and shear force check
According to EN 1993-1-1 article 6.2.9.1 and formula (6.41)

MN,y,Rd	1,198	kNm
Alpha	1,66	
MN,z,Rd	1,400	kNm
Beta	1,66	

Unity check (6.41) = 0,21 + 0,00 = 0,21 -

Note: Since the shear forces are less than half the plastic shear resistances their effect on the moment resistances is neglected.

The member satisfies the section check.

...::STABILITY CHECK::...
Classification for member buckling design

Decisive position for stability classification: 0,000 m

Classification of Internal Compression parts

According to EN 1993-1-1 Table 5.2 Sheet 1

Maximum width-to-thickness ratio	22,00
Class 1 Limit	33,00
Class 2 Limit	38,00
Class 3 Limit	42,00

=> Section classified as Class 1 for member buckling design

Flexural Buckling check

According to EN 1993-1-1 article 6.3.1.1 and formula (6.46)

Buckling parameters	yy	zz	
Sway type	non-sway	sway	
System length L	0,700	0,700	m
Buckling factor k	0,63	1,79	
Buckling length Lcr	0,440	1,256	m
Critical Euler load Ncr	938,217	163,869	kN
Slenderness Lambda	27,57	65,96	
Relative slenderness Lambda,rel	0,29	0,70	
Limit slenderness Lambda,rel,0	0,20	0,20	

Note: The slenderness or compression force is such that Flexural Buckling effects may be ignored according to EN 1993-1-1 article 6.3.1.2(4).

Torsional(-Flexural) Buckling check

According to EN 1993-1-1 article 6.3.1.1 and formula (6.46)

Note: The cross-section concerns a RHS section which is not susceptible to Torsional(-Flexural) Buckling.

Lateral Torsional Buckling check

According to EN 1993-1-1 article 6.3.2.1

Note: The cross-section concerns an RHS section with 'h / b < 10 / Lambda,rel,z'.

This section is thus not susceptible to Lateral Torsional Buckling.

Bending and axial compression check

According to EN 1993-1-1 article 6.3.3 and formula (6.61),(6.62)

Bending and axial compression check parameters		
Interaction method	alternative method 1	
Cross-section area A	3,4400e-04	m^2
Cross-section plastic modulus Wpl,y	5,0960e-06	m^3
Cross-section plastic modulus Wpl,z	5,9560e-06	m^3
Design compression force N,Ed	0,524	kN
Design bending moment (maximum) My,Ed	0,469	kNm
Design bending moment (maximum) Mz,Ed	0,000	kNm
Characteristic compression resistance N,Rk	80,840	kN
Characteristic moment resistance My,Rk	1,198	kNm
Characteristic moment resistance Mz,Rk	1,400	kNm
Reduction factor Chi,y	1,00	
Reduction factor Chi,z	1,00	
Reduction factor Chi,LT	1,00	
Interaction factor k,yy	1,00	
Interaction factor k,yz	0,61	
Interaction factor k,zy	0,59	
Interaction factor k,zz	1,00	

Maximum moment My,Ed is derived from beam B763 position 0,000 m.

Maximum moment Mz,Ed is derived from beam B763 position 0,700 m.

Interaction method 1 parameters		
Critical Euler load N,cr,y	938,217	kN
Critical Euler load N,cr,z	163,869	kN
Elastic critical load N,cr,T	20500,555	kN
Cross-section plastic modulus Wpl,y	5,0960e-06	m^3
Cross-section elastic modulus Wel,y	4,3909e-06	m^3
Cross-section plastic modulus Wpl,z	5,9560e-06	m^3
Cross-section elastic modulus Wel,z	4,9863e-06	m^3
Second moment of area Iy	8,7818e-08	m^4
Second moment of area Iz	1,2466e-07	m^4
Torsional constant It	1,5520e-07	m^4
Method for equivalent moment factor C,my,0	Table A.2 Line 2 (General)	
Design bending moment (maximum) My,Ed	0,469	kNm
Maximum relative deflection delta,z	-0,2	mm
Equivalent moment factor C,my,0	1,00	
Method for equivalent moment factor C,mz,0	Table A.2 Line 3 (Point load)	
Equivalent moment factor C,mz,0	1,00	
Factor mu,y	1,00	
Factor mu,z	1,00	
Factor epsilon,y	70,16	

Interaction method 1 parameters		
Factor a,LT	0,00	
Critical moment for uniform bending Mcr,0	81,711	kNm
Relative slenderness Lambda,rel,0	0,12	
Limit relative slenderness Lambda,rel,0,lim	0,32	
Equivalent moment factor C,my	1,00	
Equivalent moment factor C,mz	1,00	
Equivalent moment factor C,mLT	1,00	
Factor b,LT	0,00	
Factor c,LT	0,00	
Factor d,LT	0,00	
Factor e,LT	0,00	
Factor w,y	1,16	
Factor w,z	1,19	
Factor n,pl	0,01	
Maximum relative slenderness Lambda,rel,max	0,70	
Factor C,yy	1,00	
Factor C,yz	1,00	
Factor C,zy	1,00	
Factor C,zz	1,00	

Unity check (6.61) = 0,01 + 0,39 + 0,00 = 0,40 -
Unity check (6.62) = 0,01 + 0,23 + 0,00 = 0,24 -

The member satisfies the stability check.

Nonlinear calculation, Extreme : Global
Selection : All
Class : NC ULS
Cross-section : Platform - General cross-section

EN 1993-1-1 Code Check
National annex: Standard EN

Member PL220	**2,500 m**	**General cross-section**	**S 235**	**NC4**	**0,36 -**

Partial safety factors	
Gamma M0 for resistance of cross-sections	1,00
Gamma M1 for resistance to instability	1,00
Gamma M2 for resistance of net sections	1,25

Material		
Yield strength fy	235,0	MPa
Ultimate strength fu	360,0	MPa
Fabrication	Rolled	

Warning: Strength reduction in function of the thickness is not supported for this type of cross-section.

...::SECTION CHECK::...

Classification for cross-section design
According to EN 1993-1-1 article 5.5.2
Warning: Classification is not supported for this type of cross-section.
The section is checked as elastic, class 3.

The critical check is on position 1.250 m

Axis definition :
- principal y- axis in this code check is referring to the principal z axis in Scia Engineer
- principal z- axis in this code check is referring to the principal y axis in Scia Engineer

Internal forces	Calculated	Unit
N,Ed	-0,269	kN
Vy,Ed	0,000	kN
Vz,Ed	0,033	kN
T,Ed	0,000	kNm
My,Ed	-0,159	kNm
Mz,Ed	-1,129	kNm

Compression check
According to EN 1993-1-1 article 6.2.4 and formula (6.9)

A	9,0086e-04	m^2
Nc,Rd	211,701	kN
Unity check	0,00	-

Bending moment check for My
According to EN 1993-1-1 article 6.2.5 and formula (6.12),(6.14)

Wel,y,min	8,5247e-05	m^3
Mel,y,Rd	20,033	kNm
Unity check	0,01	-

Bending moment check for Mz
According to EN 1993-1-1 article 6.2.5 and formula (6.12),(6.14)

Wel,z,min	1,3797e-05	m^3
Mel,z,Rd	3,242	kNm
Unity check	0,35	-

Shear check for Vy
According to EN 1993-1-1 article 6.2.6 and formula (6.19)

Tau,Vy,Ed	0,0	MPa
Tau,Rd	135,7	MPa
Unity check	0,00	-

Note: No shear area is given for this section/fabrication, therefore the plastic shear resistance cannot be determined. As a result the elastic shear resistance according to EN 1993-1-1 article 6.2.6(4) is verified.
Shear check for Vz
According to EN 1993-1-1 article 6.2.6 and formula (6.19)

Tau,Vz,Ed	0,1	MPa
Tau,Rd	135,7	MPa
Unity check	0,00	-

Note: No shear area is given for this section/fabrication, therefore the plastic shear resistance cannot be determined. As a result the elastic shear resistance according to EN 1993-1-1 article 6.2.6(4) is verified.

Torsion check
According to EN 1993-1-1 article 6.2.7 and formula (6.23)

Tau,t,Ed	0,7	MPa

Tau,Rd	135,7	MPa
Unity check	0,01	-

Note: The unity check for torsion is lower than the limit value of 0,05. Therefore torsion is considered as insignificant and is ignored in the combined checks.

Combined bending, axial force and shear force check
According to EN 1993-1-1 article 6.2.1(5) and formula (6.1)

Elastic verification		
Fibre	3	
Sigma,N,Ed	0,3	MPa
Sigma,My,Ed	1,6	MPa
Sigma,Mz,Ed	81,8	MPa
Sigma,tot,Ed	83,7	MPa
Tau,Vy,Ed	0,0	MPa
Tau,Vz,Ed	0,0	MPa
Tau,t,Ed	0,6	MPa
Tau,tot,Ed	0,6	MPa
Sigma,von Mises,Ed	83,7	MPa
Unity check	0,36	-

The member satisfies the section check.

...::STABILITY CHECK::...

Flexural Buckling check
According to EN 1993-1-1 article 6.3.1.1 and formula (6.46)

Buckling parameters	yy	zz	
Sway type	sway	non-sway	
System length L	2,500	2,500	m
Buckling factor k	3,66	1,00	
Buckling length Lcr	9,146	2,500	m
Critical Euler load Ncr	337,694	287,197	kN
Slenderness Lambda	74,36	80,63	
Relative slenderness Lambda,rel	0,79	0,86	
Limit slenderness Lambda,rel,0	0,20	0,20	

Note: The slenderness or compression force is such that Flexural Buckling effects may be ignored according to EN 1993-1-1 article 6.3.1.2(4).

Torsional(-Flexural) Buckling check
According to EN 1993-1-1 article 6.3.1.1 and formula (6.46)

Torsional buckling length Lcr	2,500	m
Elastic critical load Ncr,T	327,812	kN
Elastic critical load Ncr,TF	238,398	kN
Relative slenderness Lambda,rel,T	0,94	
Limit slenderness Lambda,rel,0	0,20	

Note: The slenderness or compression force is such that Torsional(-Flexural) Buckling effects may be ignored according to EN 1993-1-1 article 6.3.1.2(4).

Lateral Torsional Buckling check
According to EN 1993-1-1 article 6.3.2.1 & 6.3.2.2 and formula (6.54)

LTB parameters		
Method for LTB curve	General case	
Cross-section elastic modulus Wel,y	8,5247e-05	m^3
Elastic critical moment Mcr	46,278	kNm
Relative slenderness Lambda,rel,LT	0,66	
Limit slenderness Lambda,rel,LT,0	0,20	

Note: The slenderness or bending moment is such that Lateral Torsional Buckling effects may be ignored according to EN 1993-1-1 article 6.3.2.2(4).

Mcr parameters		
LTB length L	2,500	m
Influence of load position	no influence	
Correction factor k	1,00	
Correction factor kw	1,00	
LTB moment factor C1	1,09	
LTB moment factor C2	0,19	
LTB moment factor C3	1,00	
Shear center distance d,z	0,0	mm
Distance of load application z,g	0,0	mm
Mono-symmetry constant beta,y	0,0	mm
Mono-symmetry constant z,j	0,0	mm

Note: C parameters are determined according to ECCS 119 2006 / Galea 2002.

Bending and axial compression check
According to EN 1993-1-1 article 6.3.3 and formula (6.61),(6.62)

Bending and axial compression check parameters		
Interaction method	alternative method 1	
Cross-section area A	9,0086e-04	m^2
Cross-section elastic modulus Wel,y	8,5247e-05	m^3
Cross-section elastic modulus Wel,z	1,3797e-05	m^3
Design compression force N,Ed	0,269	kN
Design bending moment (maximum) My,Ed	-0,166	kNm
Design bending moment (maximum) Mz,Ed	-1,129	kNm
Characteristic compression resistance N,Rk	211,701	kN
Characteristic moment resistance My,Rk	20,033	kNm
Characteristic moment resistance Mz,Rk	3,242	kNm
Reduction factor Chi,y	1,00	
Reduction factor Chi,z	1,00	
Reduction factor Chi,LT	1,00	
Interaction factor k,yy	1,00	
Interaction factor k,yz	1,00	
Interaction factor k,zy	1,00	
Interaction factor k,zz	1,00	

Maximum moment My,Ed is derived from beam PL220 position 0,938 m.
Maximum moment Mz,Ed is derived from beam PL220 position 1,250 m.

Interaction method 1 parameters		
Critical Euler load N,cr,y	337,694	kN
Critical Euler load N,cr,z	287,197	kN
Elastic critical load N,cr,T	327,812	kN
Cross-section elastic modulus Wel,y	8,5247e-05	m^3
Second moment of area Iy	1,3629e-05	m^4
Second moment of area Iz	8,6600e-07	m^4
Torsional constant It	6,4080e-10	m^4
Method for equivalent moment factor C,my,0	Table A.2 Line 2 (General)	
Design bending moment (maximum) My,Ed	-0,166	kNm
Maximum relative deflection delta,z	0,0	mm
Equivalent moment factor C,my,0	1,00	
Method for equivalent moment factor C,mz,0	Table A.2 Line 4 (Line load)	
Equivalent moment factor C,mz,0	1,00	
Factor mu,y	1,00	
Factor mu,z	1,00	
Factor epsilon,y	6,51	
Factor a,LT	1,00	
Critical moment for uniform bending Mcr,0	42,372	kNm
Relative slenderness Lambda,rel,0	0,69	
Limit relative slenderness Lambda,rel,0,lim	0,21	
Equivalent moment factor C,my	1,00	
Equivalent moment factor C,mz	1,00	
Equivalent moment factor C,mLT	1,00	

Unity check (6.61) = 0,00 + 0,01 + 0,35 = 0,36 -
Unity check (6.62) = 0,00 + 0,01 + 0,35 = 0,36 -

The member satisfies the stability check.

Linear calculation, Extreme : Global
Selection : All
Class : ULS2
Cross-section : ALT_PROFIL - RHS (40,0; 20,0; 2,0; 0,1; 0,1)

EN 1993-1-1 Code Check
National annex: Standard EN

Member B275	**0,700 m**	**RHS (40,0; 20,0; 2,0; 0,1; 0,1)**	**S 235**	**CO1/9**	**0,53 -**

Partial safety factors	
Gamma M0 for resistance of cross-sections	1,00
Gamma M1 for resistance to instability	1,00
Gamma M2 for resistance of net sections	1,25

Material		
Yield strength fy	235,0	MPa
Ultimate strength fu	360,0	MPa
Fabrication	Rolled	

...::SECTION CHECK::...

Classification for cross-section design
According to EN 1993-1-1 article 5.5.2
Classification of Internal Compression parts
According to EN 1993-1-1 Table 5.2 Sheet 1

Maximum width-to-thickness ratio	17,00
Class 1 Limit	73,07
Class 2 Limit	84,23
Class 3 Limit	127,70

=> Section classified as Class 1 for cross-section design

The critical check is on position 0.700 m

Internal forces	Calculated	Unit
N,Ed	0,859	kN
Vy,Ed	0,018	kN
Vz,Ed	-2,262	kN
T,Ed	0,000	kNm
My,Ed	-0,353	kNm
Mz,Ed	0,003	kNm

Tension check
According to EN 1993-1-1 article 6.2.3 and formula (6.5)

A	2,2400e-04	m^2
Npl,Rd	52,640	kN
Nu,Rd	58,061	kN
Nt,Rd	52,640	kN
Unity check	0,02	-

Bending moment check for My
According to EN 1993-1-1 article 6.2.5 and formula (6.12),(6.13)

Wpl,y	2,8160e-06	m^3
Mpl,y,Rd	0,662	kNm
Unity check	0,53	-

Bending moment check for Mz
According to EN 1993-1-1 article 6.2.5 and formula (6.12),(6.13)

Wpl,z	1,6960e-06	m^3
Mpl,z,Rd	0,399	kNm
Unity check	0,01	-

Shear check for Vy
According to EN 1993-1-1 article 6.2.6 and formula (6.17)

Eta	1,20	
Av	7,4667e-05	m^2
Vpl,y,Rd	10,131	kN
Unity check	0,00	-

Shear check for Vz
According to EN 1993-1-1 article 6.2.6 and formula (6.17)

Eta	1,20	
Av	1,4933e-04	m^2
Vpl,z,Rd	20,261	kN
Unity check	0,11	-

Torsion check
According to EN 1993-1-1 article 6.2.7 and formula (6.23)

Tau,t,Ed	0,0	MPa

Tau,Rd	135,7	MPa
Unity check	0,00	-

Note: The unity check for torsion is lower than the limit value of 0,05. Therefore torsion is considered as insignificant and is ignored in the combined checks.

Combined bending, axial force and shear force check
According to EN 1993-1-1 article 6.2.9.1 and formula (6.41)

MN,y,Rd	0,662	kNm
Alpha	1,66	
MN,z,Rd	0,399	kNm
Beta	1,66	

Unity check (6.41) = 0,35 + 0,00 = 0,35 -

Note: Since the shear forces are less than half the plastic shear resistances their effect on the moment resistances is neglected.

The member satisfies the section check.

...::STABILITY CHECK::...
Classification for member buckling design
Decisive position for stability classification: 0,000 m
Classification of Internal Compression parts
According to EN 1993-1-1 Table 5.2 Sheet 1

Maximum width-to-thickness ratio	17,00
Class 1 Limit	80,27
Class 2 Limit	92,53
Class 3 Limit	153,31

=> Section classified as Class 1 for member buckling design

Lateral Torsional Buckling check
According to EN 1993-1-1 article 6.3.2.1
Note: The cross-section concerns an RHS section with 'h / b < 10 / Lambda,rel,z'.
This section is thus not susceptible to Lateral Torsional Buckling.

Bending and axial tension check
According to EN 1993-1-3 article 6.3

Design tension force N,Ed	0,859	kN
Design bending moment My,Ed	-0,353	kNm
Design bending moment Mz,Ed	0,003	kNm
Tension resistance Nt,Rd	52,640	kN
Bending resistance Mb,y,Rd	0,662	kNm
Bending resistance Mc,z,Rd,com	0,399	kNm

Unity check = 0,53 + 0,01 - 0,02 = 0,52 -

The member satisfies the stability check.

Nonlinear calculation, Extreme : Global
Selection : All
Class : NC ULS
Cross-section : TOPUKLUK - C (20,0; 2,0; 2,0; 150,0; 2,0; 20,0)

EN 1993-1-1 Code Check
National annex: Standard EN

Member C177	**2,500 m**	**C (20,0; 2,0; 2,0; 150,0; 2,0; 20,0)**	**S 235**	**NC4**	**0,31 -**

Partial safety factors	
Gamma M0 for resistance of cross-sections	1,00
Gamma M1 for resistance to instability	1,00
Gamma M2 for resistance of net sections	1,25

Material		
Yield strength fy	235,0	MPa
Ultimate strength fu	360,0	MPa
Fabrication	Rolled	

Warning: Strength reduction in function of the thickness is not supported for this type of cross-section.

...::SECTION CHECK::...

Classification for cross-section design
According to EN 1993-1-1 article 5.5.2
Warning: Classification is not supported for this type of cross-section.
The section is checked as elastic, class 3.

The critical check is on position 1.250 m

Internal forces	Calculated	Unit
N,Ed	-0,901	kN
Vy,Ed	-0,001	kN
Vz,Ed	0,000	kN
T,Ed	0,000	kNm
My,Ed	0,036	kNm
Mz,Ed	-0,001	kNm

Compression check
According to EN 1993-1-1 article 6.2.4 and formula (6.9)

A	4,4400e-04	m^2
Nc,Rd	104,340	kN
Unity check	0,01	-

Bending moment check for My
According to EN 1993-1-1 article 6.2.5 and formula (6.12),(6.14)

Wel,y,min	1,6715e-05	m^3
Mel,y,Rd	3,928	kNm
Unity check	0,01	-

Bending moment check for Mz
According to EN 1993-1-1 article 6.2.5 and formula (6.12),(6.14)

Wel,z,min	1,6212e-06	m^3
Mel,z,Rd	0,381	kNm
Unity check	0,00	-

Shear check for Vy
According to EN 1993-1-1 article 6.2.6 and formula (6.19)

Tau,Vy,Ed	0,0	MPa
Tau,Rd	135,7	MPa
Unity check	0,00	-

Note: No shear area is given for this section/fabrication, therefore the plastic shear resistance cannot be determined. As a result the elastic shear resistance according to EN 1993-1-1 article 6.2.6(4) is verified.

Torsion check
According to EN 1993-1-1 article 6.2.7 and formula (6.23)

Tau,t,Ed	0,0	MPa
Tau,Rd	135,7	MPa
Unity check	0,00	-

Note: The unity check for torsion is lower than the limit value of 0,05. Therefore torsion is considered as insignificant and is ignored in the combined checks.

Combined bending, axial force and shear force check
According to EN 1993-1-1 article 6.2.1(5) and formula (6.1)

Elastic verification		
Fibre	15	
Sigma,N,Ed	2,0	MPa
Sigma,My,Ed	2,2	MPa

Elastic verification		
Sigma,Mz,Ed	0,3	MPa
Sigma,tot,Ed	4,5	MPa
Tau,Vy,Ed	0,0	MPa
Tau,Vz,Ed	0,0	MPa
Tau,t,Ed	0,0	MPa
Tau,tot,Ed	0,0	MPa
Sigma,von Mises,Ed	4,5	MPa
Unity check	0,02	-

The member satisfies the section check.

...::STABILITY CHECK::...

Flexural Buckling check
According to EN 1993-1-1 article 6.3.1.1 and formula (6.46)

Buckling parameters	yy	zz	
Sway type	non-sway	sway	
System length L	2,500	2,500	m
Buckling factor k	1,00	1,39	
Buckling length Lcr	2,500	3,467	m
Critical Euler load Ncr	415,755	4,043	kN
Slenderness Lambda	47,05	477,11	
Relative slenderness Lambda,rel	0,50	5,08	
Limit slenderness Lambda,rel,0	0,20	0,20	
Buckling curve	d	d	
Imperfection Alpha	0,76	0,76	
Reduction factor Chi	0,78	0,03	
Buckling resistance Nb,Rd	81,244	3,519	kN

Flexural Buckling verification		
Cross-section area A	4,4400e-04	m^2
Buckling resistance Nb,Rd	3,519	kN
Unity check	0,26	-

Torsional(-Flexural) Buckling check
According to EN 1993-1-1 article 6.3.1.1 and formula (6.46)

Torsional buckling length Lcr	2,500	m
Elastic critical load Ncr,T	26,786	kN
Elastic critical load Ncr,TF	4,043	kN
Relative slenderness Lambda,rel,T	5,08	
Limit slenderness Lambda,rel,0	0,20	
Buckling curve	d	
Imperfection Alpha	0,76	
Reduction factor Chi	0,03	
Cross-section area A	4,4400e-04	m^2
Buckling resistance Nb,Rd	3,519	kN
Unity check	0,26	-

Lateral Torsional Buckling check
According to EN 1993-1-1 article 6.3.2.1 & 6.3.2.2 and formula (6.54)

LTB parameters		
Method for LTB curve	General case	
Cross-section elastic modulus Wel,y	1,6715e-05	m^3
Elastic critical moment Mcr	0,898	kNm
Relative slenderness Lambda,rel,LT	2,09	
Limit slenderness Lambda,rel,LT,0	0,20	
LTB curve	d	
Imperfection Alpha,LT	0,76	
Reduction factor Chi,LT	0,16	
Design buckling resistance Mb,Rd	0,645	kNm
Unity check	0,06	-

Mcr parameters		
LTB length L	2,500	m
Influence of load position	no influence	
Correction factor k	1,00	
Correction factor kw	1,00	
LTB moment factor C1	1,13	
LTB moment factor C2	0,45	
LTB moment factor C3	0,53	
Shear center distance d,z	0,0	mm
Distance of load application z,g	0,0	mm
Mono-symmetry constant beta,y	-0,1	mm
Mono-symmetry constant z,j	0,0	mm

Note: C parameters are determined according to ECCS 119 2006 / Galea 2002.

Bending and axial compression check
According to EN 1993-1-1 article 6.3.3 and formula (6.61),(6.62)

Bending and axial compression check parameters		
Interaction method	alternative method 1	
Cross-section area A	4,4400e-04	m^2
Cross-section elastic modulus Wel,y	1,6715e-05	m^3
Cross-section elastic modulus Wel,z	1,6212e-06	m^3
Design compression force N,Ed	0,901	kN
Design bending moment (maximum) My,Ed	0,036	kNm
Design bending moment (maximum) Mz,Ed	-0,002	kNm
Characteristic compression resistance N,Rk	104,340	kN
Characteristic moment resistance My,Rk	3,928	kNm
Characteristic moment resistance Mz,Rk	0,381	kNm
Reduction factor Chi,y	0,78	
Reduction factor Chi,z	0,03	
Reduction factor Chi,LT	0,16	
Interaction factor k,yy	1,16	
Interaction factor k,yz	1,18	
Interaction factor k,zy	0,91	
Interaction factor k,zz	0,92	

Maximum moment My,Ed is derived from beam C177 position 1,250 m.
Maximum moment Mz,Ed is derived from beam C177 position 2,500 m.

Interaction method 1 parameters		
Critical Euler load N,cr,y	415,755	kN
Critical Euler load N,cr,z	4,043	kN
Elastic critical load N,cr,T	26,786	kN
Cross-section elastic modulus Wel,y	1,6715e-05	m^3
Second moment of area Iy	1,2537e-06	m^4
Second moment of area Iz	2,3442e-08	m^4
Torsional constant It	5,1673e-10	m^4
Method for equivalent moment factor C,my,0	Table A.2 Line 4 (Line load)	
Equivalent moment factor C,my,0	1,00	
Method for equivalent moment factor C,mz,0	Table A.2 Line 2 (General)	
Design bending moment (maximum) Mz,Ed	-0,002	kNm
Maximum relative deflection delta,y	0,2	mm
Equivalent moment factor C,mz,0	0,92	
Factor mu,y	1,00	
Factor mu,z	0,78	
Factor epsilon,y	1,07	
Factor a,LT	1,00	
Critical moment for uniform bending Mcr,0	0,797	kNm
Relative slenderness Lambda,rel,0	2,22	
Limit relative slenderness Lambda,rel,0,lim	0,20	
Equivalent moment factor C,my	1,00	
Equivalent moment factor C,mz	0,92	
Equivalent moment factor C,mLT	1,15	

Unity check (6.61) = 0,01 + 0,06 + 0,01 = 0,08 -
Unity check (6.62) = 0,26 + 0,05 + 0,01 = 0,31 -

The member satisfies the stability check.

Nonlinear calculation, Extreme : Member
Selection : All
Class : NC ULS

Member	css	mat	Case	dx [mm]	un.check [-]	sec.check [-]	stab.check [-]
B1	DİKME - CFCHS48.3X3	S 235	NC3	1745,000	0,26	0,26	0,00
B2	DİKME - CFCHS48.3X3	S 235	NC8	2000,000	0,36	0,36	0,00
B3	DİKME - CFCHS48.3X3	S 235	NC8	110,000	0,29	0,29	0,00
B4	DİKME - CFCHS48.3X3	S 235	NC8	2000,000	0,28	0,28	0,00
B5	DİKME - CFCHS48.3X3	S 235	NC8	110,000	0,30	0,30	0,00
B6	DİKME - CFCHS48.3X3	S 235	NC8	2000,000	0,30	0,30	0,00
B7	DİKME - CFCHS48.3X3	S 235	NC8	110,000	0,31	0,31	0,00
B8	DIKME - CFCHS48.3X3	S 235	NC8	2000,000	0,31	0,31	0,00
B9	DİKME - CFCHS48.3X3	S 235	NC8	110,000	0,32	0,32	0,00
B10	DIKME - CFCHS48.3X3	S 235	NC8	2000,000	0,22	0,22	0,00
B11	DİKME - CFCHS48.3X3	S 235	NC8	110,000	0,29	0,29	0,00
B12	DİKME - CFCHS48.3X3	S 235	NC8	2000,000	0,19	0,19	0,00
B13	DİKME - CFCHS48.3X3	S 235	NC3	0,000	0,24	0,24	0,00
B14	DİKME - CFCHS48.3X3	S 235	NC8	110,000	0,31	0,31	0,00
B15	DİKME - CFCHS48.3X3	S 235	NC8	0,000	0,29	0,29	0,00
B16	DİKME - CFCHS48.3X3	S 235	NC3	0,000	0,24	0,24	0,00
B17	DİKME - CFCHS48.3X3	S 235	NC8	2000,000	0,26	0,26	0,00
B18	DIKME - CFCHS48.3X3	S 235	NC8	110,000	0,25	0,25	0,00
B19	DİKME - CFCHS48.3X3	S 235	NC8	2000,000	0,27	0,27	0,00
B20	DIKME - CFCHS48.3X3	S 235	NC8	110,000	0,25	0,25	0,00
B21	DİKME - CFCHS48.3X3	S 235	NC8	2000,000	0,28	0,28	0,00
B22	DİKME - CFCHS48.3X3	S 235	NC8	110,000	0,16	0,16	0,00
B23	DIKME - CFCHS48.3X3	S 235	NC8	2000,000	0,25	0,25	0,00
B24	DİKME - CFCHS48.3X3	S 235	NC8	110,000	0,16	0,16	0,00
B25	DIKME - CFCHS48.3X3	S 235	NC8	50,000	0,32	0,32	0,00
B26	DİKME - CFCHS48.3X3	S 235	NC8	2000,000	0,40	0,40	0,00
B27	DİKME - CFCHS48.3X3	S 235	NC8	110,000	0,42	0,42	0,00
B28	DİKME - CFCHS48.3X3	S 235	NC8	2000,000	0,32	0,32	0,00
B29	DİKME - CFCHS48.3X3	S 235	NC8	110,000	0,43	0,43	0,00
B30	DİKME - CFCHS48.3X3	S 235	NC8	2000,000	0,34	0,34	0,00
B31	DİKME - CFCHS48.3X3	S 235	NC8	110,000	0,44	0,44	0,00
B32	DİKME - CFCHS48.3X3	S 235	NC8	2000,000	0,35	0,35	0,00
B33	DIKME - CFCHS48.3X3	S 235	NC8	110,000	0,46	0,46	0,00
B34	DİKME - CFCHS48.3X3	S 235	NC8	2000,000	0,29	0,29	0,00
B35	DIKME - CFCHS48.3X3	S 235	NC8	110,000	0,38	0,38	0,00
B36	DİKME - CFCHS48.3X3	S 235	NC8	2000,000	0,25	0,25	0,00
B37	DİKME - CFCHS48.3X3	S 235	NC4	0,000	0,28	0,28	0,00
B38	DİKME - CFCHS48.3X3	S 235	NC8	110,000	0,37	0,37	0,00
B39	DIKME - CFCHS48.3X3	S 235	NC8	0,000	0,37	0,37	0,00
B40	DİKME - CFCHS48.3X3	S 235	NC8	110,000	0,28	0,28	0,00
B41	DIKME - CFCHS48.3X3	S 235	NC8	0,000	0,33	0,33	0,00
B42	DİKME - CFCHS48.3X3	S 235	NC8	110,000	0,30	0,30	0,00
B43	DİKME - CFCHS48.3X3	S 235	NC8	0,000	0,35	0,35	0,00
B44	DİKME - CFCHS48.3X3	S 235	NC8	110,000	0,31	0,31	0,00
B45	DİKME - CFCHS48.3X3	S 235	NC8	0,000	0,36	0,36	0,00
B46	DİKME - CFCHS48.3X3	S 235	NC8	110,000	0,24	0,24	0,00
B47	DİKME - CFCHS48.3X3	S 235	NC8	0,000	0,31	0,31	0,00
B48	DİKME - CFCHS48.3X3	S 235	NC8	110,000	0,23	0,23	0,00
B49	DİKME - CFCHS48.3X3	S 235	NC8	50,000	0,32	0,32	0,00
B50	DIKME - CFCHS48.3X3	S 235	NC8	2000,000	0,47	0,47	0,00
B51	DİKME - CFCHS48.3X3	S 235	NC8	110,000	0,40	0,40	0,00
B52	DİKME - CFCHS48.3X3	S 235	NC8	2000,000	0,38	0,38	0,00
B53	DİKME - CFCHS48.3X3	S 235	NC8	110,000	0,40	0,40	0,00
B54	DIKME - CFCHS48.3X3	S 235	NC8	2000,000	0,40	0,40	0,00
B55	DİKME - CFCHS48.3X3	S 235	NC8	110,000	0,42	0,42	0,00
B56	DİKME - CFCHS48.3X3	S 235	NC8	2000,000	0,41	0,41	0,00
B57	DİKME - CFCHS48.3X3	S 235	NC8	110,000	0,43	0,43	0,00
B58	DİKME - CFCHS48.3X3	S 235	NC8	2000,000	0,31	0,31	0,00
B59	DİKME - CFCHS48.3X3	S 235	NC8	110,000	0,36	0,36	0,00
B60	DIKME - CFCHS48.3X3	S 235	NC8	2000,000	0,27	0,27	0,00
B61	DİKME - CFCHS48.3X3	S 235	NC8	2000,000	0,30	0,30	0,00
B62	DIKME - CFCHS48.3X3	S 235	NC8	110,000	0,41	0,41	0,00
B63	DİKME - CFCHS48.3X3	S 235	NC8	0,000	0,40	0,40	0,00
B64	DIKME - CFCHS48.3X3	S 235	NC8	110,000	0,32	0,32	0,00
B65	DİKME - CFCHS48.3X3	S 235	NC8	0,000	0,35	0,35	0,00
B66	DIKME - CFCHS48.3X3	S 235	NC8	110,000	0,34	0,34	0,00
B67	DİKME - CFCHS48.3X3	S 235	NC8	0,000	0,37	0,37	0,00
B68	DİKME - CFCHS48.3X3	S 235	NC8	110,000	0,34	0,34	0,00
B69	DIKME - CFCHS48.3X3	S 235	NC8	0,000	0,38	0,38	0,00
B70	DİKME - CFCHS48.3X3	S 235	NC8	110,000	0,25	0,25	0,00
B71	DİKME - CFCHS48.3X3	S 235	NC8	0,000	0,32	0,32	0,00
B72	DİKME - CFCHS48.3X3	S 235	NC8	110,000	0,24	0,24	0,00
B73	DİKME - CFCHS48.3X3	S 235	NC8	50,000	0,35	0,35	0,00

Member	css	mat	Case	dx [mm]	un.check [-]	sec.check [-]	stab.check [-]
B74	DİKME - CFCHS48.3X3	S 235	NC8	2000,000	0,48	0,48	0,00
B75	DİKME - CFCHS48.3X3	S 235	NC8	110,000	0,42	0,42	0,00
B76	DİKME - CFCHS48.3X3	S 235	NC8	2000,000	0,38	0,38	0,00
B77	DİKME - CFCHS48.3X3	S 235	NC8	110,000	0,43	0,43	0,00
B78	DİKME - CFCHS48.3X3	S 235	NC8	2000,000	0,40	0,40	0,00
B79	DİKME - CFCHS48.3X3	S 235	NC8	110,000	0,44	0,44	0,00
B80	DİKME - CFCHS48.3X3	S 235	NC8	2000,000	0,41	0,41	0,00
B81	DİKME - CFCHS48.3X3	S 235	NC8	110,000	0,45	0,45	0,00
B82	DİKME - CFCHS48.3X3	S 235	NC8	2000,000	0,31	0,31	0,00
B83	DİKME - CFCHS48.3X3	S 235	NC8	110,000	0,37	0,37	0,00
B84	DİKME - CFCHS48.3X3	S 235	NC1	0,000	0,28	0,28	0,00
B85	DİKME - CFCHS48.3X3	S 235	NC8	2000,000	0,33	0,33	0,00
B86	DİKME - CFCHS48.3X3	S 235	NC8	110,000	0,44	0,44	0,00
B87	DİKME - CFCHS48.3X3	S 235	NC8	0,000	0,43	0,43	0,00
B88	DİKME - CFCHS48.3X3	S 235	NC8	110,000	0,34	0,34	0,00
B89	DİKME - CFCHS48.3X3	S 235	NC8	0,000	0,38	0,38	0,00
B90	DİKME - CFCHS48.3X3	S 235	NC8	110,000	0,36	0,36	0,00
B91	DİKME - CFCHS48.3X3	S 235	NC8	0,000	0,39	0,39	0,00
B92	DİKME - CFCHS48.3X3	S 235	NC8	110,000	0,37	0,37	0,00
B93	DİKME - CFCHS48.3X3	S 235	NC8	0,000	0,41	0,41	0,00
B94	DİKME - CFCHS48.3X3	S 235	NC8	110,000	0,26	0,26	0,00
B95	DİKME - CFCHS48.3X3	S 235	NC8	0,000	0,33	0,33	0,00
B96	DİKME - CFCHS48.3X3	S 235	NC8	110,000	0,25	0,25	0,00
B97	DİKME - CFCHS48.3X3	S 235	NC8	50,000	0,35	0,35	0,00
B98	DİKME - CFCHS48.3X3	S 235	NC8	2000,000	0,52	0,52	0,00
B99	DİKME - CFCHS48.3X3	S 235	NC8	110,000	0,44	0,44	0,00
B100	DİKME - CFCHS48.3X3	S 235	NC8	2000,000	0,42	0,42	0,00
B101	DİKME - CFCHS48.3X3	S 235	NC8	110,000	0,45	0,45	0,00
B102	DİKME - CFCHS48.3X3	S 235	NC8	2000,000	0,44	0,44	0,00
B103	DİKME - CFCHS48.3X3	S 235	NC8	110,000	0,46	0,46	0,00
B104	DİKME - CFCHS48.3X3	S 235	NC8	2000,000	0,45	0,45	0,00
B105	DİKME - CFCHS48.3X3	S 235	NC8	110,000	0,47	0,47	0,00
B106	DİKME - CFCHS48.3X3	S 235	NC8	2000,000	0,33	0,33	0,00
B107	DİKME - CFCHS48.3X3	S 235	NC8	110,000	0,39	0,39	0,00
B108	DİKME - CFCHS48.3X3	S 235	NC8	2000,000	0,28	0,28	0,00
B109	DİKME - CFCHS48.3X3	S 235	NC8	2000,000	0,34	0,34	0,00
B110	DİKME - CFCHS48.3X3	S 235	NC8	110,000	0,46	0,46	0,00
B111	DİKME - CFCHS48.3X3	S 235	NC8	0,000	0,44	0,44	0,00
B112	DİKME - CFCHS48.3X3	S 235	NC8	110,000	0,36	0,36	0,00
B113	DİKME - CFCHS48.3X3	S 235	NC8	0,000	0,39	0,39	0,00
B114	DİKME - CFCHS48.3X3	S 235	NC8	110,000	0,37	0,37	0,00
B115	DİKME - CFCHS48.3X3	S 235	NC8	0,000	0,40	0,40	0,00
B116	DİKME - CFCHS48.3X3	S 235	NC8	110,000	0,38	0,38	0,00
B117	DİKME - CFCHS48.3X3	S 235	NC8	0,000	0,41	0,41	0,00
B118	DİKME - CFCHS48.3X3	S 235	NC8	110,000	0,26	0,26	0,00
B119	DİKME - CFCHS48.3X3	S 235	NC8	0,000	0,34	0,34	0,00
B120	DİKME - CFCHS48.3X3	S 235	NC8	110,000	0,25	0,25	0,00
B121	DİKME - CFCHS48.3X3	S 235	NC8	50,000	0,40	0,40	0,00
B122	DİKME - CFCHS48.3X3	S 235	NC8	2000,000	0,50	0,50	0,00
B123	DİKME - CFCHS48.3X3	S 235	NC8	110,000	0,51	0,51	0,00
B124	DİKME - CFCHS48.3X3	S 235	NC8	2000,000	0,40	0,40	0,00
B125	DİKME - CFCHS48.3X3	S 235	NC8	110,000	0,53	0,53	0,00
B126	DİKME - CFCHS48.3X3	S 235	NC8	2000,000	0,42	0,42	0,00
B127	DİKME - CFCHS48.3X3	S 235	NC8	110,000	0,54	0,54	0,00
B128	DİKME - CFCHS48.3X3	S 235	NC8	2000,000	0,43	0,43	0,00
B129	DİKME - CFCHS48.3X3	S 235	NC8	110,000	0,56	0,56	0,00
B130	DİKME - CFCHS48.3X3	S 235	NC8	2000,000	0,32	0,32	0,00
B131	DİKME - CFCHS48.3X3	S 235	NC8	110,000	0,44	0,44	0,00
B132	DİKME - CFCHS48.3X3	S 235	NC1	0,000	0,28	0,28	0,00
B133	DİKME - CFCHS48.3X3	S 235	NC8	2000,000	0,35	0,35	0,00
B134	DİKME - CFCHS48.3X3	S 235	NC8	110,000	0,47	0,47	0,00
B135	DİKME - CFCHS48.3X3	S 235	NC8	0,000	0,45	0,45	0,00
B136	DİKME - CFCHS48.3X3	S 235	NC8	110,000	0,36	0,36	0,00
B137	DİKME - CFCHS48.3X3	S 235	NC8	0,000	0,40	0,40	0,00
B138	DİKME - CFCHS48.3X3	S 235	NC8	110,000	0,38	0,38	0,00
B139	DİKME - CFCHS48.3X3	S 235	NC8	0,000	0,42	0,42	0,00
B140	DİKME - CFCHS48.3X3	S 235	NC8	110,000	0,38	0,38	0,00
B141	DİKME - CFCHS48.3X3	S 235	NC8	0,000	0,43	0,43	0,00
B142	DİKME - CFCHS48.3X3	S 235	NC8	110,000	0,27	0,27	0,00
B143	DİKME - CFCHS48.3X3	S 235	NC8	0,000	0,35	0,35	0,00
B144	DİKME - CFCHS48.3X3	S 235	NC8	110,000	0,26	0,26	0,00
B145	DİKME - CFCHS48.3X3	S 235	NC8	50,000	0,35	0,35	0,00
B146	DİKME - CFCHS48.3X3	S 235	NC8	2000,000	0,52	0,52	0,00
B147	DİKME - CFCHS48.3X3	S 235	NC8	110,000	0,44	0,44	0,00
B148	DİKME - CFCHS48.3X3	S 235	NC8	2000,000	0,42	0,42	0,00
B149	DİKME - CFCHS48.3X3	S 235	NC8	110,000	0,45	0,45	0,00

Member	css	mat	Case	dx [mm]	un.check [-]	sec.check [-]	stab.check [-]
B150	DİKME - CFCHS48.3X3	S 235	NC8	2000,000	0,44	0,44	0,00
B151	DİKME - CFCHS48.3X3	S 235	NC8	110,000	0,46	0,46	0,00
B152	DİKME - CFCHS48.3X3	S 235	NC8	2000,000	0,45	0,45	0,00
B153	DİKME - CFCHS48.3X3	S 235	NC8	110,000	0,47	0,47	0,00
B154	DİKME - CFCHS48.3X3	S 235	NC8	2000,000	0,33	0,33	0,00
B155	DİKME - CFCHS48.3X3	S 235	NC8	110,000	0,39	0,39	0,00
B156	DİKME - CFCHS48.3X3	S 235	NC8	2000,000	0,28	0,28	0,00
B157	DİKME - CFCHS48.3X3	S 235	NC8	2000,000	0,34	0,34	0,00
B158	DİKME - CFCHS48.3X3	S 235	NC8	110,000	0,46	0,46	0,00
B159	DİKME - CFCHS48.3X3	S 235	NC8	0,000	0,44	0,44	0,00
B160	DİKME - CFCHS48.3X3	S 235	NC8	110,000	0,36	0,36	0,00
B161	DİKME - CFCHS48.3X3	S 235	NC8	0,000	0,39	0,39	0,00
B162	DİKME - CFCHS48.3X3	S 235	NC8	110,000	0,37	0,37	0,00
B163	DİKME - CFCHS48.3X3	S 235	NC8	0,000	0,40	0,40	0,00
B164	DİKME - CFCHS48.3X3	S 235	NC8	110,000	0,38	0,38	0,00
B165	DİKME - CFCHS48.3X3	S 235	NC8	0,000	0,41	0,41	0,00
B166	DİKME - CFCHS48.3X3	S 235	NC8	110,000	0,26	0,26	0,00
B167	DİKME - CFCHS48.3X3	S 235	NC8	0,000	0,34	0,34	0,00
B168	DİKME - CFCHS48.3X3	S 235	NC8	110,000	0,25	0,25	0,00
B169	DİKME - CFCHS48.3X3	S 235	NC8	50,000	0,35	0,35	0,00
B170	DİKME - CFCHS48.3X3	S 235	NC8	2000,000	0,48	0,48	0,00
B171	DİKME - CFCHS48.3X3	S 235	NC8	110,000	0,42	0,42	0,00
B172	DİKME - CFCHS48.3X3	S 235	NC8	2000,000	0,38	0,38	0,00
B173	DİKME - CFCHS48.3X3	S 235	NC8	110,000	0,43	0,43	0,00
B174	DİKME - CFCHS48.3X3	S 235	NC8	2000,000	0,40	0,40	0,00
B175	DİKME - CFCHS48.3X3	S 235	NC8	110,000	0,44	0,44	0,00
B176	DİKME - CFCHS48.3X3	S 235	NC8	2000,000	0,41	0,41	0,00
B177	DİKME - CFCHS48.3X3	S 235	NC8	110,000	0,45	0,45	0,00
B178	DİKME - CFCHS48.3X3	S 235	NC8	2000,000	0,31	0,31	0,00
B179	DİKME - CFCHS48.3X3	S 235	NC8	110,000	0,37	0,37	0,00
B180	DİKME - CFCHS48.3X3	S 235	NC1	0,000	0,28	0,28	0,00
B181	DİKME - CFCHS48.3X3	S 235	NC8	2000,000	0,33	0,33	0,00
B182	DİKME - CFCHS48.3X3	S 235	NC8	110,000	0,44	0,44	0,00
B183	DİKME - CFCHS48.3X3	S 235	NC8	0,000	0,43	0,43	0,00
B184	DİKME - CFCHS48.3X3	S 235	NC8	110,000	0,34	0,34	0,00
B185	DİKME - CFCHS48.3X3	S 235	NC8	0,000	0,38	0,38	0,00
B186	DİKME - CFCHS48.3X3	S 235	NC8	110,000	0,36	0,36	0,00
B187	DİKME - CFCHS48.3X3	S 235	NC8	0,000	0,39	0,39	0,00
B188	DİKME - CFCHS48.3X3	S 235	NC8	110,000	0,37	0,37	0,00
B189	DİKME - CFCHS48.3X3	S 235	NC8	0,000	0,41	0,41	0,00
B190	DİKME - CFCHS48.3X3	S 235	NC8	110,000	0,26	0,26	0,00
B191	DİKME - CFCHS48.3X3	S 235	NC8	0,000	0,33	0,33	0,00
B192	DİKME - CFCHS48.3X3	S 235	NC8	110,000	0,25	0,25	0,00
B193	ALT_PROFIL - RHS	S 235	NC8	200,000	0,14	0,11	0,14
B194	ALT_PROFIL - RHS	S 235	NC8	0,000	0,21	0,18	0,21
B195	ALT_PROFIL - RHS	S 235	NC8	200,000	0,16	0,08	0,16
B196	ALT_PROFIL - RHS	S 235	NC8	0,000	0,14	0,11	0,14
B197	ALT_PROFIL - RHS	S 235	NC8	200,000	0,16	0,08	0,16
B198	ALT_PROFIL - RHS	S 235	NC8	0,000	0,14	0,12	0,14
B199	ALT_PROFIL - RHS	S 235	NC8	200,000	0,17	0,08	0,17
B200	ALT_PROFIL - RHS	S 235	NC8	0,000	0,14	0,12	0,14
B201	ALT_PROFIL - RHS	S 235	NC8	200,000	0,17	0,08	0,17
B202	ALT_PROFIL - RHS	S 235	NC4	700,000	0,30	0,29	0,30
B203	ALT_PROFIL - RHS	S 235	NC4	700,000	0,45	0,45	0,45
B204	ALT_PROFIL - RHS	S 235	NC5	700,000	0,25	0,24	0,25
B205	ALT_PROFIL - RHS	S 235	NC8	500,000	0,14	0,08	0,14
B206	ALT_PROFIL - RHS	S 235	NC8	500,000	0,24	0,10	0,24
B207	ALT_PROFIL - RHS	S 235	NC8	200,000	0,21	0,11	0,21
B208	ALT_PROFIL - RHS	S 235	NC8	500,000	0,16	0,07	0,16
B209	ALT_PROFIL - RHS	S 235	NC8	200,000	0,21	0,11	0,21
B210	ALT_PROFIL - RHS	S 235	NC8	500,000	0,17	0,07	0,17
B211	ALT_PROFIL - RHS	S 235	NC8	200,000	0,21	0,11	0,21
B212	ALT_PROFIL - RHS	S 235	NC8	500,000	0,18	0,07	0,18
B213	ALT_PROFIL - RHS	S 235	NC8	200,000	0,21	0,12	0,21
B214	ALT_PROFIL - RHS	S 235	NC4	700,000	0,43	0,43	0,41
B215	ALT_PROFIL - RHS	S 235	NC4	700,000	0,76	0,76	0,72
B216	ALT_PROFIL - RHS	S 235	NC4	0,000	0,45	0,45	0,44
B217	ALT_PROFIL - RHS	S 235	NC8	200,000	0,12	0,08	0,12
B218	ALT_PROFIL - RHS	S 235	NC8	0,000	0,29	0,26	0,29
B219	ALT_PROFIL - RHS	S 235	NC8	200,000	0,19	0,11	0,19
B220	ALT_PROFIL - RHS	S 235	NC8	500,000	0,21	0,08	0,21
B221	ALT_PROFIL - RHS	S 235	NC8	200,000	0,20	0,11	0,20
B222	ALT_PROFIL - RHS	S 235	NC8	500,000	0,22	0,08	0,22
B223	ALT_PROFIL - RHS	S 235	NC8	200,000	0,20	0,12	0,20
B224	ALT_PROFIL - RHS	S 235	NC8	500,000	0,23	0,08	0,23
B225	ALT_PROFIL - RHS	S 235	NC8	200,000	0,21	0,12	0,21

Member	css	mat	Case	dx [mm]	un.check [-]	sec.check [-]	stab.check [-]
B226	ALT_PROFIL - RHS	S 235	NC4	700,000	0,44	0,44	0,43
B227	ALT_PROFIL - RHS	S 235	NC4	700,000	0,77	0,77	0,74
B228	ALT_PROFIL - RHS	S 235	NC4	0,000	0,45	0,45	0,44
B229	ALT_PROFIL - RHS	S 235	NC8	200,000	0,12	0,08	0,12
B230	ALT_PROFIL - RHS	S 235	NC8	700,000	0,29	0,13	0,29
B231	ALT_PROFIL - RHS	S 235	NC8	200,000	0,20	0,12	0,20
B232	ALT_PROFIL - RHS	S 235	NC8	500,000	0,20	0,08	0,20
B233	ALT_PROFIL - RHS	S 235	NC8	200,000	0,20	0,12	0,20
B234	ALT_PROFIL - RHS	S 235	NC8	500,000	0,21	0,09	0,21
B235	ALT_PROFIL - RHS	S 235	NC8	200,000	0,20	0,13	0,20
B236	ALT_PROFIL - RHS	S 235	NC8	500,000	0,22	0,09	0,22
B237	ALT_PROFIL - RHS	S 235	NC8	200,000	0,21	0,13	0,21
B238	ALT_PROFIL - RHS	S 235	NC4	700,000	0,46	0,46	0,44
B239	ALT_PROFIL - RHS	S 235	NC4	700,000	0,79	0,79	0,74
B240	ALT_PROFIL - RHS	S 235	NC4	0,000	0,45	0,45	0,42
B241	ALT_PROFIL - RHS	S 235	NC8	200,000	0,12	0,08	0,12
B242	ALT_PROFIL - RHS	S 235	NC8	0,000	0,32	0,28	0,32
B243	ALT_PROFIL - RHS	S 235	NC8	200,000	0,20	0,12	0,20
B244	ALT_PROFIL - RHS	S 235	NC8	0,000	0,22	0,19	0,22
B245	ALT_PROFIL - RHS	S 235	NC8	200,000	0,20	0,12	0,20
B246	ALT_PROFIL - RHS	S 235	NC8	0,000	0,23	0,21	0,23
B247	ALT_PROFIL - RHS	S 235	NC8	200,000	0,20	0,13	0,20
B248	ALT_PROFIL - RHS	S 235	NC8	0,000	0,24	0,21	0,24
B249	ALT_PROFIL - RHS	S 235	NC8	200,000	0,20	0,13	0,20
B250	ALT_PROFIL - RHS	S 235	NC4	700,000	0,46	0,46	0,44
B251	ALT_PROFIL - RHS	S 235	NC4	700,000	0,79	0,79	0,75
B252	ALT_PROFIL - RHS	S 235	NC4	0,000	0,44	0,44	0,42
B253	ALT_PROFIL - RHS	S 235	NC8	200,000	0,09	0,07	0,09
B254	ALT_PROFIL - RHS	S 235	NC8	599,990	0,27	0,11	0,27
B255	ALT_PROFIL - RHS	S 235	NC8	200,000	0,19	0,12	0,19
B256	ALT_PROFIL - RHS	S 235	NC8	500,000	0,17	0,07	0,17
B257	ALT_PROFIL - RHS	S 235	NC8	200,000	0,19	0,12	0,19
B258	ALT_PROFIL - RHS	S 235	NC8	500,000	0,19	0,08	0,19
B259	ALT_PROFIL - RHS	S 235	NC8	200,000	0,20	0,13	0,20
B260	ALT_PROFIL - RHS	S 235	NC8	500,000	0,19	0,08	0,19
B261	ALT_PROFIL - RHS	S 235	NC8	200,000	0,20	0,13	0,20
B262	ALT_PROFIL - RHS	S 235	NC4	700,000	0,46	0,46	0,44
B263	ALT_PROFIL - RHS	S 235	NC4	700,000	0,79	0,79	0,74
B264	ALT_PROFIL - RHS	S 235	NC4	0,000	0,44	0,44	0,42
B265	ALT_PROFIL - RHS	S 235	NC8	200,000	0,12	0,08	0,12
B266	ALT_PROFIL - RHS	S 235	NC8	0,000	0,32	0,28	0,32
B267	ALT_PROFIL - RHS	S 235	NC8	200,000	0,20	0,12	0,20
B268	ALT_PROFIL - RHS	S 235	NC8	500,000	0,22	0,08	0,22
B269	ALT_PROFIL - RHS	S 235	NC8	200,000	0,20	0,12	0,20
B270	ALT_PROFIL - RHS	S 235	NC8	0,000	0,23	0,21	0,23
B271	ALT_PROFIL - RHS	S 235	NC8	200,000	0,20	0,13	0,20
B272	ALT_PROFIL - RHS	S 235	NC8	0,000	0,24	0,21	0,24
B273	ALT_PROFIL - RHS	S 235	NC8	200,000	0,20	0,13	0,20
B274	ALT_PROFIL - RHS	S 235	NC4	700,000	0,46	0,46	0,45
B275	ALT_PROFIL - RHS	S 235	NC4	700,000	0,79	0,79	0,75
B276	ALT_PROFIL - RHS	S 235	NC4	0,000	0,44	0,44	0,42
B277	ALT_PROFIL - RHS	S 235	NC8	200,000	0,12	0,08	0,12
B278	ALT_PROFIL - RHS	S 235	NC8	700,000	0,29	0,13	0,29
B279	ALT_PROFIL - RHS	S 235	NC8	200,000	0,20	0,12	0,20
B280	ALT_PROFIL - RHS	S 235	NC8	500,000	0,20	0,08	0,20
B281	ALT_PROFIL - RHS	S 235	NC8	200,000	0,20	0,12	0,20
B282	ALT_PROFIL - RHS	S 235	NC8	500,000	0,21	0,09	0,21
B283	ALT_PROFIL - RHS	S 235	NC8	200,000	0,20	0,13	0,20
B284	ALT_PROFIL - RHS	S 235	NC8	500,000	0,22	0,09	0,22
B285	ALT_PROFIL - RHS	S 235	NC8	200,000	0,21	0,13	0,21
B286	ALT_PROFIL - RHS	S 235	NC4	700,000	0,46	0,46	0,44
B287	ALT_PROFIL - RHS	S 235	NC4	700,000	0,79	0,79	0,74
B288	ALT_PROFIL - RHS	S 235	NC4	0,000	0,45	0,45	0,42
B289	YATAY - CHS	S 235	NC8	1249,990	0,06	0,06	0,00
B290	YATAY - CHS	S 235	NC8	1249,990	0,06	0,06	0,00
B291	YATAY - CHS	S 235	NC8	1249,990	0,06	0,06	0,00
B292	YATAY - CHS	S 235	NC8	1249,990	0,07	0,07	0,00
B293	YATAY - CHS	S 235	NC8	1249,990	0,06	0,06	0,00
B294	YATAY - CHS	S 235	NC8	1249,990	0,06	0,06	0,00
B295	YATAY - CHS	S 235	NC8	1249,990	0,07	0,07	0,00
B296	YATAY - CHS	S 235	NC8	1249,990	0,06	0,06	0,00
B297	YATAY - CHS	S 235	NC8	1249,990	0,06	0,06	0,00
B298	YATAY - CHS	S 235	NC8	1249,990	0,07	0,07	0,00
B299	YATAY - CHS	S 235	NC8	1249,990	0,07	0,07	0,00
B300	YATAY - CHS	S 235	NC8	1249,990	0,06	0,06	0,00
B301	YATAY - CHS	S 235	NC8	1249,990	0,06	0,06	0,00

Member	css	mat	Case	dx [mm]	un.check [-]	sec.check [-]	stab.check [-]
B302	YATAY - CHS	S 235	NC8	1249,990	0,07	0,07	0,00
B457	DİKME - CFCHS48.3X3	S 235	NC8	50,000	0,32	0,32	0,00
B458	DİKME - CFCHS48.3X3	S 235	NC8	2000,000	0,47	0,47	0,00
B459	DİKME - CFCHS48.3X3	S 235	NC8	110,000	0,40	0,40	0,00
B460	DİKME - CFCHS48.3X3	S 235	NC8	2000,000	0,38	0,38	0,00
B461	DİKME - CFCHS48.3X3	S 235	NC8	110,000	0,40	0,40	0,00
B462	DİKME - CFCHS48.3X3	S 235	NC8	2000,000	0,40	0,40	0,00
B463	DİKME - CFCHS48.3X3	S 235	NC8	110,000	0,42	0,42	0,00
B464	DİKME - CFCHS48.3X3	S 235	NC8	2000,000	0,41	0,41	0,00
B465	DİKME - CFCHS48.3X3	S 235	NC8	110,000	0,43	0,43	0,00
B466	DİKME - CFCHS48.3X3	S 235	NC8	2000,000	0,31	0,31	0,00
B467	DİKME - CFCHS48.3X3	S 235	NC8	110,000	0,36	0,36	0,00
B468	DİKME - CFCHS48.3X3	S 235	NC8	2000,000	0,27	0,27	0,00
B469	DİKME - CFCHS48.3X3	S 235	NC8	2000,000	0,30	0,30	0,00
B470	DİKME - CFCHS48.3X3	S 235	NC8	110,000	0,41	0,41	0,00
B471	DİKME - CFCHS48.3X3	S 235	NC8	0,000	0,40	0,40	0,00
B472	DİKME - CFCHS48.3X3	S 235	NC8	110,000	0,32	0,32	0,00
B473	DİKME - CFCHS48.3X3	S 235	NC8	0,000	0,35	0,35	0,00
B474	DİKME - CFCHS48.3X3	S 235	NC8	110,000	0,34	0,34	0,00
B475	DİKME - CFCHS48.3X3	S 235	NC8	0,000	0,37	0,37	0,00
B476	DİKME - CFCHS48.3X3	S 235	NC8	110,000	0,34	0,34	0,00
B477	DİKME - CFCHS48.3X3	S 235	NC8	0,000	0,38	0,38	0,00
B478	DİKME - CFCHS48.3X3	S 235	NC8	110,000	0,25	0,25	0,00
B479	DİKME - CFCHS48.3X3	S 235	NC8	0,000	0,32	0,32	0,00
B480	DİKME - CFCHS48.3X3	S 235	NC8	110,000	0,24	0,24	0,00
B481	ALT_PROFIL - RHS	S 235	NC8	200,000	0,12	0,08	0,12
B482	ALT_PROFIL - RHS	S 235	NC8	0,000	0,29	0,26	0,29
B483	ALT_PROFIL - RHS	S 235	NC8	200,000	0,19	0,11	0,19
B484	ALT_PROFIL - RHS	S 235	NC8	500,000	0,21	0,08	0,21
B485	ALT_PROFIL - RHS	S 235	NC8	200,000	0,20	0,11	0,20
B486	ALT_PROFIL - RHS	S 235	NC8	500,000	0,22	0,08	0,22
B487	ALT_PROFIL - RHS	S 235	NC8	200,000	0,20	0,12	0,20
B488	ALT_PROFIL - RHS	S 235	NC8	500,000	0,23	0,08	0,23
B489	ALT_PROFIL - RHS	S 235	NC8	200,000	0,21	0,12	0,21
B490	ALT_PROFIL - RHS	S 235	NC4	700,000	0,44	0,44	0,43
B491	ALT_PROFIL - RHS	S 235	NC4	700,000	0,77	0,77	0,74
B492	ALT_PROFIL - RHS	S 235	NC4	0,000	0,45	0,45	0,44
B493	YATAY - CHS	S 235	NC8	1249,990	0,06	0,06	0,00
B494	YATAY - CHS	S 235	NC8	1249,990	0,07	0,07	0,00
B517	DİKME - CFCHS48.3X3	S 235	NC8	50,000	0,32	0,32	0,00
B518	DİKME - CFCHS48.3X3	S 235	NC8	2000,000	0,40	0,40	0,00
B519	DİKME - CFCHS48.3X3	S 235	NC8	110,000	0,42	0,42	0,00
B520	DİKME - CFCHS48.3X3	S 235	NC8	2000,000	0,32	0,32	0,00
B521	DİKME - CFCHS48.3X3	S 235	NC8	110,000	0,43	0,43	0,00
B522	DİKME - CFCHS48.3X3	S 235	NC8	2000,000	0,34	0,34	0,00
B523	DİKME - CFCHS48.3X3	S 235	NC8	110,000	0,44	0,44	0,00
B524	DİKME - CFCHS48.3X3	S 235	NC8	2000,000	0,35	0,35	0,00
B525	DİKME - CFCHS48.3X3	S 235	NC8	110,000	0,46	0,46	0,00
B526	DİKME - CFCHS48.3X3	S 235	NC8	2000,000	0,29	0,29	0,00
B527	DİKME - CFCHS48.3X3	S 235	NC8	110,000	0,38	0,38	0,00
B528	DİKME - CFCHS48.3X3	S 235	NC8	2000,000	0,25	0,25	0,00
B529	DİKME - CFCHS48.3X3	S 235	NC4	0,000	0,28	0,28	0,00
B530	DİKME - CFCHS48.3X3	S 235	NC8	110,000	0,37	0,37	0,00
B531	DİKME - CFCHS48.3X3	S 235	NC8	0,000	0,37	0,37	0,00
B532	DİKME - CFCHS48.3X3	S 235	NC8	110,000	0,28	0,28	0,00
B533	DİKME - CFCHS48.3X3	S 235	NC8	0,000	0,33	0,33	0,00
B534	DİKME - CFCHS48.3X3	S 235	NC8	110,000	0,30	0,30	0,00
B535	DİKME - CFCHS48.3X3	S 235	NC8	0,000	0,35	0,35	0,00
B536	DİKME - CFCHS48.3X3	S 235	NC8	110,000	0,31	0,31	0,00
B537	DİKME - CFCHS48.3X3	S 235	NC8	0,000	0,36	0,36	0,00
B538	DİKME - CFCHS48.3X3	S 235	NC8	110,000	0,24	0,24	0,00
B539	DİKME - CFCHS48.3X3	S 235	NC8	0,000	0,31	0,31	0,00
B540	DİKME - CFCHS48.3X3	S 235	NC8	110,000	0,23	0,23	0,00
B541	ALT_PROFIL - RHS	S 235	NC8	500,000	0,14	0,08	0,14
B542	ALT_PROFIL - RHS	S 235	NC8	500,000	0,24	0,10	0,24
B543	ALT_PROFIL - RHS	S 235	NC8	200,000	0,21	0,11	0,21
B544	ALT_PROFIL - RHS	S 235	NC8	500,000	0,16	0,07	0,16
B545	ALT_PROFIL - RHS	S 235	NC8	200,000	0,21	0,11	0,21
B546	ALT_PROFIL - RHS	S 235	NC8	500,000	0,17	0,07	0,17
B547	ALT_PROFIL - RHS	S 235	NC8	200,000	0,21	0,11	0,21
B548	ALT_PROFIL - RHS	S 235	NC8	500,000	0,18	0,07	0,18
B549	ALT_PROFIL - RHS	S 235	NC8	200,000	0,22	0,12	0,22
B550	ALT_PROFIL - RHS	S 235	NC4	700,000	0,43	0,43	0,41
B551	ALT_PROFIL - RHS	S 235	NC4	700,000	0,76	0,76	0,72
B552	ALT_PROFIL - RHS	S 235	NC4	0,000	0,45	0,45	0,44
B553	YATAY - CHS	S 235	NC8	1249,990	0,06	0,06	0,00

Member	css	mat	Case	dx [mm]	un.check [-]	sec.check [-]	stab.check [-]
B554	YATAY - CHS	S 235	NC8	1249,990	0,06	0,06	0,00
B577	DİKME - CFCHS48.3X3	S 235	NC5	1745,000	0,26	0,26	0,00
B578	DİKME - CFCHS48.3X3	S 235	NC8	2000,000	0,36	0,36	0,00
B579	DİKME - CFCHS48.3X3	S 235	NC8	110,000	0,29	0,29	0,00
B580	DİKME - CFCHS48.3X3	S 235	NC8	2000,000	0,28	0,28	0,00
B581	DİKME - CFCHS48.3X3	S 235	NC8	110,000	0,30	0,30	0,00
B582	DİKME - CFCHS48.3X3	S 235	NC8	2000,000	0,30	0,30	0,00
B583	DİKME - CFCHS48.3X3	S 235	NC8	110,000	0,31	0,31	0,00
B584	DİKME - CFCHS48.3X3	S 235	NC8	2000,000	0,30	0,30	0,00
B585	DİKME - CFCHS48.3X3	S 235	NC8	110,000	0,32	0,32	0,00
B586	DİKME - CFCHS48.3X3	S 235	NC8	2000,000	0,22	0,22	0,00
B587	DİKME - CFCHS48.3X3	S 235	NC8	110,000	0,29	0,29	0,00
B588	DİKME - CFCHS48.3X3	S 235	NC8	2000,000	0,19	0,19	0,00
B589	DİKME - CFCHS48.3X3	S 235	NC5	0,000	0,24	0,24	0,00
B590	DİKME - CFCHS48.3X3	S 235	NC8	110,000	0,31	0,31	0,00
B591	DİKME - CFCHS48.3X3	S 235	NC8	0,000	0,29	0,29	0,00
B592	DİKME - CFCHS48.3X3	S 235	NC5	0,000	0,24	0,24	0,00
B593	DİKME - CFCHS48.3X3	S 235	NC8	2000,000	0,26	0,26	0,00
B594	DİKME - CFCHS48.3X3	S 235	NC8	110,000	0,25	0,25	0,00
B595	DİKME - CFCHS48.3X3	S 235	NC8	2000,000	0,27	0,27	0,00
B596	DİKME - CFCHS48.3X3	S 235	NC8	110,000	0,25	0,25	0,00
B597	DİKME - CFCHS48.3X3	S 235	NC8	2000,000	0,28	0,28	0,00
B598	DİKME - CFCHS48.3X3	S 235	NC8	110,000	0,16	0,16	0,00
B599	DİKME - CFCHS48.3X3	S 235	NC8	2000,000	0,25	0,25	0,00
B600	DİKME - CFCHS48.3X3	S 235	NC8	110,000	0,16	0,16	0,00
B601	ALT_PROFIL - RHS	S 235	NC8	200,000	0,14	0,11	0,14
B602	ALT_PROFIL - RHS	S 235	NC8	0,000	0,21	0,18	0,21
B603	ALT_PROFIL - RHS	S 235	NC8	200,000	0,16	0,09	0,16
B604	ALT_PROFIL - RHS	S 235	NC8	0,000	0,14	0,11	0,14
B605	ALT_PROFIL - RHS	S 235	NC8	200,000	0,16	0,09	0,16
B606	ALT_PROFIL - RHS	S 235	NC8	0,000	0,14	0,12	0,14
B607	ALT_PROFIL - RHS	S 235	NC8	200,000	0,17	0,09	0,17
B608	ALT_PROFIL - RHS	S 235	NC8	0,000	0,14	0,12	0,14
B609	ALT_PROFIL - RHS	S 235	NC8	200,000	0,17	0,09	0,17
B610	ALT_PROFIL - RHS	S 235	NC4	700,000	0,29	0,29	0,28
B611	ALT_PROFIL - RHS	S 235	NC4	700,000	0,45	0,45	0,43
B612	ALT_PROFIL - RHS	S 235	NC3	700,000	0,25	0,24	0,25
B613	YATAY - CHS	S 235	NC8	1249,990	0,06	0,06	0,00
B614	YATAY - CHS	S 235	NC8	1249,990	0,06	0,06	0,00
B637	ÜST_PROFIL - RHS	S 235	NC8	700,000	0,14	0,13	0,14
B638	ÜST_PROFIL - RHS	S 235	NC8	0,000	0,17	0,16	0,17
B639	ÜST_PROFIL - RHS	S 235	NC8	700,000	0,18	0,17	0,18
B640	ÜST_PROFIL - RHS	S 235	NC8	700,000	0,19	0,18	0,19
B641	ÜST_PROFIL - RHS	S 235	NC8	700,000	0,20	0,19	0,20
B642	ÜST_PROFIL - RHS	S 235	NC8	0,000	0,21	0,21	0,21
B643	ÜST_PROFIL - RHS	S 235	NC8	700,000	0,20	0,19	0,20
B644	ÜST_PROFIL - RHS	S 235	NC8	700,000	0,19	0,18	0,19
B645	ÜST_PROFIL - RHS	S 235	NC8	700,000	0,18	0,17	0,18
B646	ÜST_PROFIL - RHS	S 235	NC8	0,000	0,17	0,16	0,17
B647	ÜST_PROFIL - RHS	S 235	NC8	700,000	0,14	0,13	0,14
B648	ÜST_PROFIL - RHS	S 235	NC8	700,000	0,12	0,03	0,12
B649	ÜST_PROFIL - RHS	S 235	NC8	0,000	0,09	0,07	0,09
B650	ÜST_PROFIL - RHS	S 235	NC8	700,000	0,09	0,05	0,09
B651	ÜST_PROFIL - RHS	S 235	NC8	700,000	0,06	0,05	0,06
B652	ÜST_PROFIL - RHS	S 235	NC8	700,000	0,10	0,05	0,10
B653	ÜST_PROFIL - RHS	S 235	NC8	0,000	0,10	0,09	0,10
B654	ÜST_PROFIL - RHS	S 235	NC8	700,000	0,09	0,05	0,09
B655	ÜST_PROFIL - RHS	S 235	NC8	700,000	0,06	0,05	0,06
B656	ÜST_PROFIL - RHS	S 235	NC8	700,000	0,09	0,05	0,09
B657	ÜST_PROFIL - RHS	S 235	NC8	0,000	0,09	0,07	0,09
B658	ÜST_PROFIL - RHS	S 235	NC8	700,000	0,10	0,03	0,10
B758	ÜST_PROFIL - RHS	S 235	NC8	0,000	0,26	0,25	0,26
B759	ÜST_PROFIL - RHS	S 235	NC8	0,000	0,33	0,32	0,33
B760	ÜST_PROFIL - RHS	S 235	NC8	0,000	0,34	0,33	0,34
B761	ÜST_PROFIL - RHS	S 235	NC8	0,000	0,36	0,36	0,36
B762	ÜST_PROFIL - RHS	S 235	NC8	0,000	0,37	0,37	0,37
B763	ÜST_PROFIL - RHS	S 235	NC8	0,000	0,40	0,39	0,40
B764	ÜST_PROFIL - RHS	S 235	NC8	0,000	0,38	0,37	0,38
B765	ÜST_PROFIL - RHS	S 235	NC8	0,000	0,36	0,36	0,36
B766	ÜST_PROFIL - RHS	S 235	NC8	0,000	0,34	0,33	0,34
B767	ÜST_PROFIL - RHS	S 235	NC8	0,000	0,33	0,32	0,33
B768	ÜST_PROFIL - RHS	S 235	NC8	0,000	0,26	0,25	0,26
B769	ÜST_PROFIL - RHS	S 235	NC8	700,000	0,06	0,06	0,06
B770	ÜST_PROFIL - RHS	S 235	NC8	700,000	0,08	0,07	0,08
B771	ÜST_PROFIL - RHS	S 235	NC8	700,000	0,09	0,08	0,09
B772	ÜST_PROFIL - RHS	S 235	NC8	700,000	0,09	0,09	0,09

Member	css	mat	Case	dx [mm]	un.check [-]	sec.check [-]	stab.check [-]
B773	ÜST_PROFIL - RHS	S 235	NC8	700,000	0,10	0,09	0,10
B774	ÜST_PROFIL - RHS	S 235	NC8	0,000	0,10	0,09	0,10
B775	ÜST_PROFIL - RHS	S 235	NC8	700,000	0,10	0,09	0,10
B776	ÜST_PROFIL - RHS	S 235	NC8	700,000	0,09	0,09	0,09
B777	ÜST_PROFIL - RHS	S 235	NC8	700,000	0,09	0,08	0,09
B778	ÜST_PROFIL - RHS	S 235	NC8	700,000	0,08	0,07	0,08
B779	ÜST_PROFIL - RHS	S 235	NC8	700,000	0,07	0,06	0,07
B780	ÜST_PROFIL - RHS	S 235	NC8	700,000	0,10	0,08	0,10
B781	ÜST_PROFIL - RHS	S 235	NC8	0,000	0,14	0,12	0,14
B782	ÜST_PROFIL - RHS	S 235	NC8	700,000	0,11	0,10	0,11
B783	ÜST_PROFIL - RHS	S 235	NC8	700,000	0,12	0,11	0,12
B784	ÜST_PROFIL - RHS	S 235	NC8	700,000	0,13	0,11	0,13
B785	ÜST_PROFIL - RHS	S 235	NC8	0,000	0,17	0,15	0,17
B786	ÜST_PROFIL - RHS	S 235	NC8	700,000	0,13	0,11	0,13
B787	ÜST_PROFIL - RHS	S 235	NC8	700,000	0,12	0,11	0,12
B788	ÜST_PROFIL - RHS	S 235	NC8	700,000	0,11	0,10	0,11
B789	ÜST_PROFIL - RHS	S 235	NC8	0,000	0,14	0,12	0,14
B790	ÜST_PROFIL - RHS	S 235	NC8	700,000	0,10	0,08	0,10
B791	ÜST_PROFIL - RHS	S 235	NC8	700,000	0,07	0,07	0,07
B792	ÜST_PROFIL - RHS	S 235	NC8	700,000	0,09	0,08	0,09
B793	ÜST_PROFIL - RHS	S 235	NC8	700,000	0,10	0,09	0,10
B794	ÜST_PROFIL - RHS	S 235	NC8	700,000	0,10	0,10	0,10
B795	ÜST_PROFIL - RHS	S 235	NC8	700,000	0,10	0,10	0,10
B796	ÜST_PROFIL - RHS	S 235	NC8	0,000	0,11	0,10	0,11
B797	ÜST_PROFIL - RHS	S 235	NC8	700,000	0,10	0,10	0,10
B798	ÜST_PROFIL - RHS	S 235	NC8	700,000	0,10	0,10	0,10
B799	ÜST_PROFIL - RHS	S 235	NC8	700,000	0,10	0,09	0,10
B800	ÜST_PROFIL - RHS	S 235	NC8	700,000	0,09	0,08	0,09
B801	ÜST_PROFIL - RHS	S 235	NC8	700,000	0,07	0,07	0,07
B802	ÜST_PROFIL - RHS	S 235	NC8	700,000	0,10	0,08	0,10
B803	ÜST_PROFIL - RHS	S 235	NC8	0,000	0,14	0,12	0,14
B804	ÜST_PROFIL - RHS	S 235	NC8	700,000	0,11	0,10	0,11
B805	ÜST_PROFIL - RHS	S 235	NC8	700,000	0,12	0,11	0,12
B806	ÜST_PROFIL - RHS	S 235	NC8	700,000	0,13	0,11	0,13
B807	ÜST_PROFIL - RHS	S 235	NC8	0,000	0,17	0,15	0,17
B808	ÜST_PROFIL - RHS	S 235	NC8	700,000	0,13	0,11	0,13
B809	ÜST_PROFIL - RHS	S 235	NC8	700,000	0,12	0,11	0,12
B810	ÜST_PROFIL - RHS	S 235	NC8	700,000	0,11	0,10	0,11
B811	ÜST_PROFIL - RHS	S 235	NC8	0,000	0,14	0,12	0,14
B812	ÜST_PROFIL - RHS	S 235	NC8	700,000	0,10	0,08	0,10
B813	ÜST_PROFIL - RHS	S 235	NC8	700,000	0,07	0,06	0,07
B814	ÜST_PROFIL - RHS	S 235	NC8	700,000	0,09	0,08	0,09
B815	ÜST_PROFIL - RHS	S 235	NC8	700,000	0,10	0,09	0,10
B816	ÜST_PROFIL - RHS	S 235	NC8	700,000	0,10	0,10	0,10
B817	ÜST_PROFIL - RHS	S 235	NC8	700,000	0,11	0,10	0,11
B818	ÜST_PROFIL - RHS	S 235	NC8	0,000	0,11	0,10	0,11
B819	ÜST_PROFIL - RHS	S 235	NC8	700,000	0,11	0,10	0,11
B820	ÜST_PROFIL - RHS	S 235	NC8	700,000	0,10	0,10	0,10
B821	ÜST_PROFIL - RHS	S 235	NC8	700,000	0,10	0,09	0,10
B822	ÜST_PROFIL - RHS	S 235	NC8	700,000	0,09	0,08	0,09
B823	ÜST_PROFIL - RHS	S 235	NC8	700,000	0,07	0,07	0,07
B824	ÜST_PROFIL - RHS	S 235	NC8	700,000	0,11	0,09	0,11
B825	ÜST_PROFIL - RHS	S 235	NC8	0,000	0,15	0,13	0,15
B826	ÜST_PROFIL - RHS	S 235	NC8	700,000	0,12	0,10	0,12
B827	ÜST_PROFIL - RHS	S 235	NC8	700,000	0,13	0,11	0,13
B828	ÜST_PROFIL - RHS	S 235	NC8	700,000	0,13	0,11	0,13
B829	ÜST_PROFIL - RHS	S 235	NC8	0,000	0,18	0,16	0,18
B830	ÜST_PROFIL - RHS	S 235	NC8	700,000	0,13	0,11	0,13
B831	ÜST_PROFIL - RHS	S 235	NC8	700,000	0,13	0,11	0,13
B832	ÜST_PROFIL - RHS	S 235	NC8	700,000	0,12	0,10	0,12
B833	ÜST_PROFIL - RHS	S 235	NC8	0,000	0,15	0,13	0,15
B834	ÜST_PROFIL - RHS	S 235	NC8	700,000	0,11	0,09	0,11
B835	ÜST_PROFIL - RHS	S 235	NC3	700,000	0,08	0,06	0,08
B836	ÜST_PROFIL - RHS	S 235	NC8	700,000	0,08	0,07	0,08
B837	ÜST_PROFIL - RHS	S 235	NC8	700,000	0,07	0,06	0,07
B838	ÜST_PROFIL - RHS	S 235	NC8	700,000	0,07	0,07	0,07
B839	ÜST_PROFIL - RHS	S 235	NC8	700,000	0,07	0,06	0,07
B840	ÜST_PROFIL - RHS	S 235	NC8	700,000	0,08	0,08	0,08
B841	ÜST_PROFIL - RHS	S 235	NC8	700,000	0,07	0,06	0,07
B842	ÜST_PROFIL - RHS	S 235	NC8	700,000	0,07	0,07	0,07
B843	ÜST_PROFIL - RHS	S 235	NC8	700,000	0,07	0,06	0,07
B844	ÜST_PROFIL - RHS	S 235	NC8	700,000	0,08	0,07	0,08
B845	ÜST_PROFIL - RHS	S 235	NC5	700,000	0,08	0,06	0,08
B846	ÜST_PROFIL - RHS	S 235	NC8	700,000	0,15	0,12	0,15
B847	ÜST_PROFIL - RHS	S 235	NC8	0,000	0,14	0,12	0,14
B848	ÜST_PROFIL - RHS	S 235	NC8	700,000	0,13	0,11	0,13

Member	css	mat	Case	dx [mm]	un.check [-]	sec.check [-]	stab.check [-]
B849	ÜST_PROFIL - RHS	S 235	NC8	700,000	0,14	0,12	0,14
B850	ÜST_PROFIL - RHS	S 235	NC8	700,000	0,15	0,13	0,15
B851	ÜST_PROFIL - RHS	S 235	NC8	0,000	0,17	0,15	0,17
B852	ÜST_PROFIL - RHS	S 235	NC8	700,000	0,15	0,13	0,15
B853	ÜST_PROFIL - RHS	S 235	NC8	700,000	0,14	0,12	0,14
B854	ÜST_PROFIL - RHS	S 235	NC8	700,000	0,13	0,11	0,13
B855	ÜST_PROFIL - RHS	S 235	NC8	0,000	0,14	0,12	0,14
B856	ÜST_PROFIL - RHS	S 235	NC8	700,000	0,15	0,12	0,15
B857	ÜST_PROFIL - RHS	S 235	NC5	700,000	0,10	0,07	0,10
B858	ÜST_PROFIL - RHS	S 235	NC4	0,000	0,08	0,03	0,08
B859	ÜST_PROFIL - RHS	S 235	NC8	700,000	0,06	0,05	0,06
B860	ÜST_PROFIL - RHS	S 235	NC8	700,000	0,06	0,05	0,06
B861	ÜST_PROFIL - RHS	S 235	NC5	700,000	0,07	0,04	0,07
B862	ÜST_PROFIL - RHS	S 235	NC3	700,000	0,08	0,03	0,08
B863	ÜST_PROFIL - RHS	S 235	NC3	700,000	0,07	0,04	0,07
B864	ÜST_PROFIL - RHS	S 235	NC8	700,000	0,06	0,05	0,06
B865	ÜST_PROFIL - RHS	S 235	NC8	700,000	0,06	0,05	0,06
B866	ÜST_PROFIL - RHS	S 235	NC4	0,000	0,08	0,03	0,08
B867	ÜST_PROFIL - RHS	S 235	NC5	700,000	0,10	0,07	0,10
PL1	Platform - General cross-section	S 235	NC8	1562,500	0,03	0,03	0,03
PL2	Platform - General cross-section	S 235	NC8	1406,250	0,04	0,04	0,04
B868	YATAY - CHS	S 235	NC8	1249,990	0,07	0,07	0,00
B869	YATAY - CHS	S 235	NC8	1249,990	0,07	0,07	0,00
B870	YATAY - CHS	S 235	NC8	1250,010	0,06	0,06	0,00
B871	YATAY - CHS	S 235	NC8	1249,990	0,06	0,06	0,00
B872	YATAY - CHS	S 235	NC8	1249,990	0,07	0,07	0,00
B873	YATAY - CHS	S 235	NC8	1249,990	0,07	0,07	0,00
B874	YATAY - CHS	S 235	NC8	1249,990	0,06	0,06	0,00
B875	YATAY - CHS	S 235	NC8	1249,990	0,06	0,06	0,00
B876	YATAY - CHS	S 235	NC8	1249,990	0,07	0,07	0,00
B877	YATAY - CHS	S 235	NC8	1249,990	0,07	0,07	0,00
B878	YATAY - CHS	S 235	NC8	1249,990	0,06	0,06	0,00
B879	YATAY - CHS	S 235	NC8	1249,990	0,06	0,06	0,00
B880	YATAY - CHS	S 235	NC8	1249,990	0,06	0,06	0,00
B881	YATAY - CHS	S 235	NC8	1249,990	0,06	0,06	0,00
B882	YATAY - CHS	S 235	NC8	1249,990	0,06	0,06	0,00
B883	YATAY - CHS	S 235	NC8	1249,990	0,06	0,06	0,00
B884	YATAY - CHS	S 235	NC8	1249,990	0,06	0,06	0,00
B885	YATAY - CHS	S 235	NC8	1249,990	0,06	0,06	0,00
B886	YATAY - CHS	S 235	NC8	1249,990	0,06	0,06	0,00
B887	YATAY - CHS	S 235	NC8	1249,990	0,06	0,06	0,00
B888	YATAY - CHS	S 235	NC8	1249,990	0,07	0,07	0,00
B889	YATAY - CHS	S 235	NC8	1249,990	0,07	0,07	0,00
B890	YATAY - CHS	S 235	NC8	1249,990	0,07	0,07	0,00
B891	YATAY - CHS	S 235	NC8	1249,990	0,07	0,07	0,00
B892	YATAY - CHS	S 235	NC8	1249,990	0,07	0,07	0,00
B893	YATAY - CHS	S 235	NC8	1249,990	0,07	0,07	0,00
B894	YATAY - CHS	S 235	NC8	1249,990	0,07	0,07	0,00
B895	YATAY - CHS	S 235	NC8	1249,990	0,07	0,07	0,00
B896	YATAY - CHS	S 235	NC8	1249,990	0,07	0,07	0,00
B897	YATAY - CHS	S 235	NC8	1249,990	0,07	0,07	0,00
B898	YATAY - CHS	S 235	NC8	1249,990	0,07	0,07	0,00
B899	YATAY - CHS	S 235	NC8	1249,990	0,07	0,07	0,00
B900	YATAY - CHS	S 235	NC8	1249,990	0,07	0,07	0,00
B901	YATAY - CHS	S 235	NC8	1249,990	0,07	0,07	0,00
B902	YATAY - CHS	S 235	NC8	1249,990	0,07	0,07	0,00
B903	YATAY - CHS	S 235	NC8	1249,990	0,07	0,07	0,00
B904	YATAY - CHS	S 235	NC8	1249,990	0,07	0,07	0,00
B905	YATAY - CHS	S 235	NC8	1249,990	0,07	0,07	0,00
B906	YATAY - CHS	S 235	NC8	1249,990	0,07	0,07	0,00
B907	YATAY - CHS	S 235	NC8	1249,990	0,07	0,07	0,00
B908	YATAY - CHS	S 235	NC8	1249,990	0,07	0,07	0,00
B909	YATAY - CHS	S 235	NC8	1249,990	0,07	0,07	0,00
B910	YATAY - CHS	S 235	NC8	1249,990	0,07	0,07	0,00
B911	YATAY - CHS	S 235	NC8	1249,990	0,07	0,07	0,00
B912	YATAY - CHS	S 235	NC8	1249,990	0,07	0,07	0,00
B913	YATAY - CHS	S 235	NC8	1249,990	0,07	0,07	0,00
B914	YATAY - CHS	S 235	NC8	1249,990	0,07	0,07	0,00
B915	YATAY - CHS	S 235	NC8	1249,990	0,07	0,07	0,00
B916	YATAY - CHS	S 235	NC8	1249,990	0,07	0,07	0,00
B917	YATAY - CHS	S 235	NC8	1249,990	0,07	0,07	0,00
B918	YATAY - CHS	S 235	NC8	1249,990	0,07	0,07	0,00
B919	YATAY - CHS	S 235	NC8	1249,990	0,07	0,07	0,00
B920	YATAY - CHS	S 235	NC8	1249,990	0,07	0,07	0,00
B921	YATAY - CHS	S 235	NC8	1249,990	0,07	0,07	0,00
B922	YATAY - CHS	S 235	NC8	1249,990	0,07	0,07	0,00

Member	css	mat	Case	dx [mm]	un.check [-]	sec.check [-]	stab.check [-]
B923	YATAY - CHS	S 235	NC8	1249,990	0,07	0,07	0,00
B924	YATAY - CHS	S 235	NC8	1249,990	0,07	0,07	0,00
B925	YATAY - CHS	S 235	NC8	1249,990	0,07	0,07	0,00
B926	YATAY - CHS	S 235	NC8	1249,990	0,07	0,07	0,00
B927	YATAY - CHS	S 235	NC8	1249,990	0,07	0,07	0,00
B928	YATAY - CHS	S 235	NC8	1249,990	0,07	0,07	0,00
B929	YATAY - CHS	S 235	NC8	1249,990	0,07	0,07	0,00
B930	YATAY - CHS	S 235	NC8	1249,990	0,07	0,07	0,00
B931	YATAY - CHS	S 235	NC8	1249,990	0,07	0,07	0,00
B932	YATAY - CHS	S 235	NC8	1249,990	0,07	0,07	0,00
B933	YATAY - CHS	S 235	NC8	1249,990	0,07	0,07	0,00
B934	YATAY - CHS	S 235	NC8	1249,990	0,07	0,07	0,00
B935	YATAY - CHS	S 235	NC8	1249,990	0,07	0,07	0,00
B936	YATAY - CHS	S 235	NC8	1249,990	0,07	0,07	0,00
B937	YATAY - CHS	S 235	NC8	1249,990	0,07	0,07	0,00
B938	YATAY - CHS	S 235	NC8	1249,990	0,07	0,07	0,00
B939	YATAY - CHS	S 235	NC8	1249,990	0,07	0,07	0,00
B940	YATAY - CHS	S 235	NC8	1249,990	0,07	0,07	0,00
B941	YATAY - CHS	S 235	NC8	1249,990	0,07	0,07	0,00
B942	YATAY - CHS	S 235	NC8	1249,990	0,07	0,07	0,00
B943	YATAY - CHS	S 235	NC8	1249,990	0,07	0,07	0,00
B944	YATAY - CHS	S 235	NC8	1249,990	0,07	0,07	0,00
B945	YATAY - CHS	S 235	NC8	1249,990	0,07	0,07	0,00
B946	YATAY - CHS	S 235	NC8	1249,990	0,07	0,07	0,00
B947	YATAY - CHS	S 235	NC8	1249,990	0,07	0,07	0,00
B948	YATAY - CHS	S 235	NC8	1249,990	0,07	0,07	0,00
B949	YATAY - CHS	S 235	NC8	1249,990	0,07	0,07	0,00
B950	YATAY - CHS	S 235	NC8	1249,990	0,07	0,07	0,00
B951	YATAY - CHS	S 235	NC8	1249,990	0,07	0,07	0,00
B952	YATAY - CHS	S 235	NC8	1249,990	0,07	0,07	0,00
B953	YATAY - CHS	S 235	NC8	1249,990	0,07	0,07	0,00
B954	YATAY - CHS	S 235	NC8	1249,990	0,07	0,07	0,00
B955	YATAY - CHS	S 235	NC8	1249,990	0,07	0,07	0,00
B956	YATAY - CHS	S 235	NC8	1249,990	0,07	0,07	0,00
B957	YATAY - CHS	S 235	NC8	1249,990	0,07	0,07	0,00
B958	YATAY - CHS	S 235	NC8	1249,990	0,07	0,07	0,00
B959	YATAY - CHS	S 235	NC8	1249,990	0,07	0,07	0,00
B960	YATAY - CHS	S 235	NC8	1249,990	0,07	0,07	0,00
B961	YATAY - CHS	S 235	NC8	1249,990	0,07	0,07	0,00
B962	YATAY - CHS	S 235	NC8	1249,990	0,07	0,07	0,00
B963	YATAY - CHS	S 235	NC8	1249,990	0,07	0,07	0,00
B964	YATAY - CHS	S 235	NC8	1249,990	0,07	0,07	0,00
B965	YATAY - CHS	S 235	NC8	1249,990	0,07	0,07	0,00
B966	YATAY - CHS	S 235	NC8	1249,990	0,07	0,07	0,00
B967	YATAY - CHS	S 235	NC8	1249,990	0,07	0,07	0,00
B968	YATAY - CHS	S 235	NC8	1249,990	0,07	0,07	0,00
B969	YATAY - CHS	S 235	NC8	1249,990	0,07	0,07	0,00
B970	YATAY - CHS	S 235	NC8	1249,990	0,07	0,07	0,00
B971	YATAY - CHS	S 235	NC8	1249,990	0,07	0,07	0,00
B972	YATAY - CHS	S 235	NC8	1249,990	0,07	0,07	0,00
B973	YATAY - CHS	S 235	NC8	1249,990	0,07	0,07	0,00
B974	YATAY - CHS	S 235	NC8	1249,990	0,07	0,07	0,00
B975	YATAY - CHS	S 235	NC8	1249,990	0,07	0,07	0,00
B976	YATAY - CHS	S 235	NC8	1249,990	0,07	0,07	0,00
B977	YATAY - CHS	S 235	NC8	1249,990	0,07	0,07	0,00
B978	YATAY - CHS	S 235	NC8	1249,990	0,07	0,07	0,00
B979	YATAY - CHS	S 235	NC8	1249,990	0,07	0,07	0,00
B980	YATAY - CHS	S 235	NC8	1249,990	0,07	0,07	0,00
B981	YATAY - CHS	S 235	NC8	1249,990	0,07	0,07	0,00
B982	YATAY - CHS	S 235	NC8	1249,990	0,07	0,07	0,00
B983	YATAY - CHS	S 235	NC8	1249,990	0,07	0,07	0,00
B984	YATAY - CHS	S 235	NC8	1249,990	0,07	0,07	0,00
B985	YATAY - CHS	S 235	NC8	1249,990	0,07	0,07	0,00
B986	YATAY - CHS	S 235	NC8	1249,990	0,07	0,07	0,00
B987	YATAY - CHS	S 235	NC8	1249,990	0,07	0,07	0,00
B988	YATAY - CHS	S 235	NC8	1249,990	0,07	0,07	0,00
B989	YATAY - CHS	S 235	NC8	1249,990	0,07	0,07	0,00
B990	YATAY - CHS	S 235	NC8	1249,990	0,07	0,07	0,00
B991	YATAY - CHS	S 235	NC8	1249,990	0,07	0,07	0,00
B992	YATAY - CHS	S 235	NC8	1249,990	0,07	0,07	0,00
B993	YATAY - CHS	S 235	NC8	1249,990	0,07	0,07	0,00
B994	YATAY - CHS	S 235	NC8	1249,990	0,07	0,07	0,00
B995	YATAY - CHS	S 235	NC8	1249,990	0,07	0,07	0,00
B996	YATAY - CHS	S 235	NC8	1249,990	0,07	0,07	0,00
B997	YATAY - CHS	S 235	NC8	1249,990	0,07	0,07	0,00
B998	YATAY - CHS	S 235	NC8	1250,010	0,07	0,07	0,00

Member	css	mat	Case	dx [mm]	un.check [-]	sec.check [-]	stab.check [-]
B999	YATAY - CHS	S 235	NC8	1249,990	0,07	0,07	0,00
B1000	YATAY - CHS	S 235	NC8	1249,990	0,07	0,07	0,00
B1001	YATAY - CHS	S 235	NC8	1249,990	0,07	0,07	0,00
B1002	YATAY - CHS	S 235	NC8	1249,990	0,07	0,07	0,00
B1003	YATAY - CHS	S 235	NC8	1249,990	0,07	0,07	0,00
B1004	YATAY - CHS	S 235	NC8	1249,990	0,07	0,07	0,00
B1005	YATAY - CHS	S 235	NC8	1249,990	0,07	0,07	0,00
B1006	YATAY - CHS	S 235	NC8	1249,990	0,07	0,07	0,00
B1007	YATAY - CHS	S 235	NC8	1249,990	0,07	0,07	0,00
B1008	YATAY - CHS	S 235	NC8	1249,990	0,08	0,08	0,00
B1009	YATAY - CHS	S 235	NC8	1249,990	0,07	0,07	0,00
B1010	YATAY - CHS	S 235	NC8	1249,990	0,08	0,08	0,00
B1011	YATAY - CHS	S 235	NC8	1249,990	0,07	0,07	0,00
B1012	YATAY - CHS	S 235	NC8	1249,990	0,08	0,08	0,00
B1013	YATAY - CHS	S 235	NC8	1249,990	0,07	0,07	0,00
B1014	YATAY - CHS	S 235	NC8	1249,990	0,08	0,08	0,00
B1015	YATAY - CHS	S 235	NC8	1249,990	0,07	0,07	0,00
B1016	YATAY - CHS	S 235	NC8	1249,990	0,08	0,08	0,00
B1017	YATAY - CHS	S 235	NC8	1249,990	0,07	0,07	0,00
B1018	YATAY - CHS	S 235	NC8	1249,990	0,08	0,08	0,00
B1019	YATAY - CHS	S 235	NC8	1249,990	0,07	0,07	0,00
B1020	YATAY - CHS	S 235	NC8	1249,990	0,08	0,08	0,00
B1021	YATAY - CHS	S 235	NC8	1249,990	0,07	0,07	0,00
B1022	YATAY - CHS	S 235	NC8	1249,990	0,08	0,08	0,00
B1023	YATAY - CHS	S 235	NC8	1249,990	0,07	0,07	0,00
B1024	YATAY - CHS	S 235	NC8	1249,990	0,08	0,08	0,00
B1025	YATAY - CHS	S 235	NC8	1249,990	0,07	0,07	0,00
B1026	YATAY - CHS	S 235	NC8	1249,990	0,08	0,08	0,00
B1027	YATAY - CHS	S 235	NC8	1249,990	0,07	0,07	0,00
B1028	YATAY - CHS	S 235	NC8	1249,990	0,08	0,08	0,00
B1029	YATAY - CHS	S 235	NC8	1249,990	0,08	0,08	0,00
B1030	YATAY - CHS	S 235	NC8	1249,990	0,08	0,08	0,00
B1031	YATAY - CHS	S 235	NC8	1249,990	0,08	0,08	0,00
B1032	YATAY - CHS	S 235	NC8	1249,990	0,08	0,08	0,00
B1033	YATAY - CHS	S 235	NC8	1249,990	0,08	0,08	0,00
B1034	YATAY - CHS	S 235	NC8	1249,990	0,08	0,08	0,00
B1035	YATAY - CHS	S 235	NC8	1249,990	0,08	0,08	0,00
B1036	YATAY - CHS	S 235	NC8	1249,990	0,08	0,08	0,00
B1037	YATAY - CHS	S 235	NC8	1249,990	0,08	0,08	0,00
B1038	YATAY - CHS	S 235	NC8	1249,990	0,08	0,08	0,00
B1039	YATAY - CHS	S 235	NC8	1249,990	0,08	0,08	0,00
B1040	YATAY - CHS	S 235	NC8	1249,990	0,08	0,08	0,00
B1041	YATAY - CHS	S 235	NC8	1249,990	0,08	0,08	0,00
B1042	YATAY - CHS	S 235	NC8	1249,990	0,08	0,08	0,00
B1043	YATAY - CHS	S 235	NC8	1249,990	0,08	0,08	0,00
B1044	YATAY - CHS	S 235	NC8	1249,990	0,08	0,08	0,00
B1045	YATAY - CHS	S 235	NC8	1249,990	0,08	0,08	0,00
B1046	YATAY - CHS	S 235	NC8	1250,010	0,08	0,08	0,00
B1047	YATAY - CHS	S 235	NC8	1249,990	0,08	0,08	0,00
B1048	YATAY - CHS	S 235	NC8	1249,990	0,08	0,08	0,00
B1049	YATAY - CHS	S 235	NC8	1249,990	0,08	0,08	0,00
B1050	YATAY - CHS	S 235	NC8	1249,990	0,08	0,08	0,00
B1051	YATAY - CHS	S 235	NC8	1249,990	0,08	0,08	0,00
B1052	YATAY - CHS	S 235	NC8	1249,990	0,08	0,08	0,00
B1053	YATAY - CHS	S 235	NC8	1249,990	0,08	0,08	0,00
B1054	YATAY - CHS	S 235	NC8	1249,990	0,08	0,08	0,00
B1055	YATAY - CHS	S 235	NC8	1249,990	0,08	0,08	0,00
B1056	YATAY - CHS	S 235	NC8	1249,990	0,08	0,08	0,00
B1057	YATAY - CHS	S 235	NC8	1249,990	0,08	0,08	0,00
B1058	YATAY - CHS	S 235	NC8	1249,990	0,08	0,08	0,00
B1059	YATAY - CHS	S 235	NC8	1249,990	0,08	0,08	0,00
B1060	YATAY - CHS	S 235	NC8	1249,990	0,08	0,08	0,00
B1061	YATAY - CHS	S 235	NC8	1249,990	0,08	0,08	0,00
B1062	YATAY - CHS	S 235	NC8	1249,990	0,08	0,08	0,00
B1063	YATAY - CHS	S 235	NC8	1249,990	0,08	0,08	0,00
B1064	YATAY - CHS	S 235	NC8	1249,990	0,08	0,08	0,00
B1065	YATAY - CHS	S 235	NC8	1249,990	0,08	0,08	0,00
B1066	YATAY - CHS	S 235	NC8	1249,990	0,08	0,08	0,00
B1067	YATAY - CHS	S 235	NC8	1249,990	0,08	0,08	0,00
B1068	YATAY - CHS	S 235	NC8	1249,990	0,08	0,08	0,00
B1069	YATAY - CHS	S 235	NC8	1249,990	0,08	0,08	0,00
B1070	YATAY - CHS	S 235	NC8	1249,990	0,08	0,08	0,00
B1071	YATAY - CHS	S 235	NC8	1249,990	0,08	0,08	0,00
B1072	YATAY - CHS	S 235	NC8	1249,990	0,08	0,08	0,00
B1073	YATAY - CHS	S 235	NC8	1249,990	0,08	0,08	0,00
B1074	YATAY - CHS	S 235	NC8	1249,990	0,08	0,08	0,00

Member	css	mat	Case	dx [mm]	un.check [-]	sec.check [-]	stab.check [-]
B1075	YATAY - CHS	S 235	NC8	1249,990	0,08	0,08	0,00
B1076	YATAY - CHS	S 235	NC8	1249,990	0,08	0,08	0,00
B1077	YATAY - CHS	S 235	NC8	1249,990	0,08	0,08	0,00
B1078	YATAY - CHS	S 235	NC8	1249,990	0,08	0,08	0,00
B1079	YATAY - CHS	S 235	NC8	1249,990	0,08	0,08	0,00
B1080	YATAY - CHS	S 235	NC8	1249,990	0,08	0,08	0,00
B1081	YATAY - CHS	S 235	NC8	1249,990	0,08	0,08	0,00
B1082	YATAY - CHS	S 235	NC8	1249,990	0,08	0,08	0,00
B1083	YATAY - CHS	S 235	NC8	1249,990	0,08	0,08	0,00
B1084	YATAY - CHS	S 235	NC8	1249,990	0,08	0,08	0,00
B1085	YATAY - CHS	S 235	NC8	1249,990	0,08	0,08	0,00
B1086	YATAY - CHS	S 235	NC8	1249,990	0,08	0,08	0,00
B1087	YATAY - CHS	S 235	NC8	1249,990	0,08	0,08	0,00
PL3	Platform - General cross-section	S 235	NC8	1249,990	0,03	0,03	0,03
PL4	Platform - General cross-section	S 235	NC8	1249,990	0,04	0,04	0,04
PL5	Platform - General cross-section	S 235	NC8	1249,990	0,03	0,03	0,03
PL6	Platform - General cross-section	S 235	NC8	2500,000	0,04	0,01	0,04
PL7	Platform - General cross-section	S 235	NC8	1250,010	0,03	0,03	0,03
PL8	Platform - General cross-section	S 235	NC8	2500,000	0,04	0,01	0,04
PL9	Platform - General cross-section	S 235	NC8	1250,010	0,03	0,03	0,03
PL10	Platform - General cross-section	S 235	NC8	2500,000	0,04	0,01	0,04
PL11	Platform - General cross-section	S 235	NC8	1249,990	0,03	0,03	0,03
PL12	Platform - General cross-section	S 235	NC8	1249,990	0,04	0,04	0,04
PL13	Platform - General cross-section	S 235	NC8	1249,990	0,03	0,03	0,03
PL14	Platform - General cross-section	S 235	NC8	1249,990	0,04	0,04	0,04
PL15	Platform - General cross-section	S 235	NC8	1250,010	0,03	0,03	0,03
PL16	Platform - General cross-section	S 235	NC8	1250,010	0,04	0,04	0,04
PL17	Platform - General cross-section	S 235	NC8	1250,010	0,03	0,03	0,03
PL18	Platform - General cross-section	S 235	NC8	1249,990	0,04	0,04	0,04
PL19	Platform - General cross-section	S 235	NC8	937,500	0,03	0,03	0,03
PL20	Platform - General cross-section	S 235	NC8	1093,750	0,04	0,04	0,04
PL21	Platform - General cross-section	S 235	NC8	2500,000	0,02	0,00	0,02
PL22	Platform - General cross-section	S 235	NC8	1249,990	0,03	0,03	0,03
PL23	Platform - General cross-section	S 235	NC8	1249,990	0,02	0,02	0,02
PL24	Platform - General cross-section	S 235	NC8	1250,010	0,03	0,03	0,03
PL25	Platform - General cross-section	S 235	NC8	1249,990	0,02	0,02	0,02
PL26	Platform - General cross-section	S 235	NC8	2500,000	0,03	0,01	0,03
PL27	Platform - General cross-section	S 235	NC8	2500,000	0,02	0,00	0,02
PL28	Platform - General cross-section	S 235	NC8	2500,000	0,03	0,01	0,03
PL29	Platform - General cross-section	S 235	NC8	2500,000	0,02	0,00	0,02
PL30	Platform - General cross-section	S 235	NC8	1249,990	0,03	0,03	0,03
PL31	Platform - General cross-section	S 235	NC8	1249,990	0,02	0,02	0,02
PL32	Platform - General cross-section	S 235	NC8	1250,010	0,03	0,03	0,03
PL33	Platform - General cross-section	S 235	NC8	1249,990	0,02	0,02	0,02
PL34	Platform - General cross-section	S 235	NC8	1249,990	0,03	0,03	0,03
PL35	Platform - General cross-section	S 235	NC8	1250,010	0,02	0,02	0,02
PL36	Platform - General cross-section	S 235	NC8	1250,010	0,03	0,03	0,03
PL37	Platform - General cross-section	S 235	NC8	2500,000	0,02	0,00	0,02
PL38	Platform - General cross-section	S 235	NC8	1249,990	0,03	0,03	0,03
PL39	Platform - General cross-section	S 235	NC8	1249,990	0,02	0,02	0,02
PL40	Platform - General cross-section	S 235	NC8	1406,250	0,03	0,03	0,03
PL41	Platform - General cross-section	S 235	NC8	1562,500	0,03	0,03	0,03
PL42	Platform - General cross-section	S 235	NC8	2500,000	0,04	0,01	0,04
PL43	Platform - General cross-section	S 235	NC8	1249,990	0,03	0,03	0,03
PL44	Platform - General cross-section	S 235	NC8	2500,000	0,04	0,01	0,04
PL45	Platform - General cross-section	S 235	NC8	1249,990	0,03	0,03	0,03
PL46	Platform - General cross-section	S 235	NC8	2500,000	0,04	0,01	0,04
PL47	Platform - General cross-section	S 235	NC8	1250,010	0,03	0,03	0,03
PL48	Platform - General cross-section	S 235	NC8	2500,000	0,03	0,01	0,03
PL49	Platform - General cross-section	S 235	NC8	1250,010	0,03	0,03	0,03
PL50	Platform - General cross-section	S 235	NC8	2500,000	0,04	0,01	0,04
PL51	Platform - General cross-section	S 235	NC8	1249,990	0,03	0,03	0,03
PL52	Platform - General cross-section	S 235	NC8	1249,990	0,04	0,03	0,04
PL53	Platform - General cross-section	S 235	NC8	1249,990	0,03	0,03	0,03
PL54	Platform - General cross-section	S 235	NC8	1249,990	0,03	0,03	0,03
PL55	Platform - General cross-section	S 235	NC8	1250,010	0,03	0,03	0,03
PL56	Platform - General cross-section	S 235	NC8	1250,010	0,04	0,04	0,04
PL57	Platform - General cross-section	S 235	NC8	1250,010	0,03	0,03	0,03
PL58	Platform - General cross-section	S 235	NC8	1250,010	0,04	0,04	0,04
PL59	Platform - General cross-section	S 235	NC8	937,500	0,03	0,03	0,03
PL60	Platform - General cross-section	S 235	NC8	1093,750	0,04	0,04	0,04
PL61	Platform - General cross-section	S 235	NC8	1250,010	0,02	0,02	0,02
PL62	Platform - General cross-section	S 235	NC8	1093,750	0,03	0,03	0,03
PL63	Platform - General cross-section	S 235	NC8	1249,990	0,02	0,02	0,02
PL64	Platform - General cross-section	S 235	NC8	1250,010	0,03	0,03	0,03
PL65	Platform - General cross-section	S 235	NC8	2500,000	0,02	0,00	0,02

Member	css	mat	Case	dx [mm]	un.check [-]	sec.check [-]	stab.check [-]
PL66	Platform - General cross-section	S 235	NC8	2500,000	0,03	0,01	0,03
PL67	Platform - General cross-section	S 235	NC8	1250,010	0,02	0,02	0,02
PL68	Platform - General cross-section	S 235	NC8	2500,000	0,03	0,01	0,03
PL69	Platform - General cross-section	S 235	NC8	2500,000	0,02	0,00	0,02
PL70	Platform - General cross-section	S 235	NC8	1249,990	0,03	0,03	0,03
PL71	Platform - General cross-section	S 235	NC8	1249,990	0,02	0,02	0,02
PL72	Platform - General cross-section	S 235	NC8	1250,010	0,03	0,03	0,03
PL73	Platform - General cross-section	S 235	NC8	1249,990	0,02	0,02	0,02
PL74	Platform - General cross-section	S 235	NC8	1249,990	0,03	0,03	0,03
PL75	Platform - General cross-section	S 235	NC8	2500,000	0,02	0,00	0,02
PL76	Platform - General cross-section	S 235	NC8	1250,010	0,03	0,03	0,03
PL77	Platform - General cross-section	S 235	NC8	2500,000	0,02	0,00	0,02
PL78	Platform - General cross-section	S 235	NC8	1249,990	0,03	0,03	0,03
PL79	Platform - General cross-section	S 235	NC8	1249,990	0,02	0,02	0,02
PL80	Platform - General cross-section	S 235	NC8	1406,250	0,03	0,03	0,03
PL81	Platform - General cross-section	S 235	NC8	1562,500	0,03	0,03	0,03
PL82	Platform - General cross-section	S 235	NC8	2500,000	0,04	0,01	0,04
PL83	Platform - General cross-section	S 235	NC8	1249,990	0,03	0,03	0,03
PL84	Platform - General cross-section	S 235	NC8	2500,000	0,04	0,01	0,04
PL85	Platform - General cross-section	S 235	NC8	1249,990	0,03	0,03	0,03
PL86	Platform - General cross-section	S 235	NC8	2500,000	0,04	0,01	0,04
PL87	Platform - General cross-section	S 235	NC8	1250,010	0,03	0,03	0,03
PL88	Platform - General cross-section	S 235	NC8	2500,000	0,04	0,01	0,04
PL89	Platform - General cross-section	S 235	NC8	1250,010	0,03	0,03	0,03
PL90	Platform - General cross-section	S 235	NC8	1562,500	0,04	0,03	0,04
PL91	Platform - General cross-section	S 235	NC8	1249,990	0,03	0,03	0,03
PL92	Platform - General cross-section	S 235	NC8	1249,990	0,04	0,04	0,04
PL93	Platform - General cross-section	S 235	NC8	1249,990	0,03	0,03	0,03
PL94	Platform - General cross-section	S 235	NC8	1249,990	0,04	0,04	0,04
PL95	Platform - General cross-section	S 235	NC8	1250,010	0,03	0,03	0,03
PL96	Platform - General cross-section	S 235	NC8	1250,010	0,04	0,04	0,04
PL97	Platform - General cross-section	S 235	NC8	1250,010	0,03	0,03	0,03
PL98	Platform - General cross-section	S 235	NC8	1250,010	0,04	0,04	0,04
PL99	Platform - General cross-section	S 235	NC8	937,500	0,03	0,03	0,03
PL100	Platform - General cross-section	S 235	NC8	1093,750	0,04	0,04	0,04
PL101	Platform - General cross-section	S 235	NC7	2500,000	0,02	0,00	0,02
PL102	Platform - General cross-section	S 235	NC8	1093,750	0,03	0,03	0,03
PL103	Platform - General cross-section	S 235	NC1	1249,990	0,02	0,02	0,02
PL104	Platform - General cross-section	S 235	NC8	1250,010	0,03	0,03	0,03
PL105	Platform - General cross-section	S 235	NC8	2500,000	0,02	0,00	0,02
PL106	Platform - General cross-section	S 235	NC8	2500,000	0,03	0,01	0,03
PL107	Platform - General cross-section	S 235	NC8	1250,010	0,02	0,02	0,02
PL108	Platform - General cross-section	S 235	NC8	2500,000	0,03	0,01	0,03
PL109	Platform - General cross-section	S 235	NC8	2500,000	0,02	0,00	0,02
PL110	Platform - General cross-section	S 235	NC8	1249,990	0,03	0,03	0,03
PL111	Platform - General cross-section	S 235	NC8	1249,990	0,02	0,02	0,02
PL112	Platform - General cross-section	S 235	NC8	1250,010	0,03	0,03	0,03
PL113	Platform - General cross-section	S 235	NC8	1249,990	0,02	0,02	0,02
PL114	Platform - General cross-section	S 235	NC8	1249,990	0,03	0,03	0,03
PL115	Platform - General cross-section	S 235	NC8	2500,000	0,02	0,00	0,02
PL116	Platform - General cross-section	S 235	NC8	1250,010	0,03	0,03	0,03
PL117	Platform - General cross-section	S 235	NC7	2500,000	0,02	0,00	0,02
PL118	Platform - General cross-section	S 235	NC8	1249,990	0,03	0,03	0,03
PL119	Platform - General cross-section	S 235	NC8	1249,990	0,02	0,02	0,02
PL120	Platform - General cross-section	S 235	NC8	1406,250	0,03	0,03	0,03
PL121	Platform - General cross-section	S 235	NC8	1562,500	0,03	0,03	0,03
PL122	Platform - General cross-section	S 235	NC8	2500,000	0,04	0,01	0,04
PL123	Platform - General cross-section	S 235	NC8	1249,990	0,03	0,03	0,03
PL124	Platform - General cross-section	S 235	NC8	2500,000	0,04	0,01	0,04
PL125	Platform - General cross-section	S 235	NC8	1249,990	0,03	0,03	0,03
PL126	Platform - General cross-section	S 235	NC8	2500,000	0,04	0,01	0,04
PL127	Platform - General cross-section	S 235	NC8	1250,010	0,03	0,03	0,03
PL128	Platform - General cross-section	S 235	NC8	2500,000	0,04	0,01	0,04
PL129	Platform - General cross-section	S 235	NC8	1250,010	0,03	0,03	0,03
PL130	Platform - General cross-section	S 235	NC8	1562,500	0,04	0,03	0,04
PL131	Platform - General cross-section	S 235	NC8	1249,990	0,03	0,03	0,03
PL132	Platform - General cross-section	S 235	NC8	1249,990	0,04	0,04	0,04
PL133	Platform - General cross-section	S 235	NC8	1249,990	0,03	0,03	0,03
PL134	Platform - General cross-section	S 235	NC8	1249,990	0,04	0,04	0,04
PL135	Platform - General cross-section	S 235	NC8	1250,010	0,03	0,03	0,03
PL136	Platform - General cross-section	S 235	NC8	1250,010	0,04	0,04	0,04
PL137	Platform - General cross-section	S 235	NC8	1250,010	0,04	0,03	0,04
PL138	Platform - General cross-section	S 235	NC8	1250,010	0,04	0,04	0,04
PL139	Platform - General cross-section	S 235	NC8	937,500	0,03	0,03	0,03
PL140	Platform - General cross-section	S 235	NC8	1093,750	0,04	0,04	0,04
PL141	Platform - General cross-section	S 235	NC7	2500,000	0,02	0,00	0,02

Member	css	mat	Case	dx [mm]	un.check [-]	sec.check [-]	stab.check [-]
PL142	Platform - General cross-section	S 235	NC8	1093,750	0,03	0,03	0,03
PL143	Platform - General cross-section	S 235	NC2	1249,990	0,02	0,02	0,02
PL144	Platform - General cross-section	S 235	NC8	1250,010	0,03	0,03	0,03
PL145	Platform - General cross-section	S 235	NC8	2500,000	0,02	0,00	0,02
PL146	Platform - General cross-section	S 235	NC8	2500,000	0,03	0,01	0,03
PL147	Platform - General cross-section	S 235	NC8	1250,010	0,02	0,02	0,02
PL148	Platform - General cross-section	S 235	NC8	2500,000	0,03	0,01	0,03
PL149	Platform - General cross-section	S 235	NC8	2500,000	0,02	0,00	0,02
PL150	Platform - General cross-section	S 235	NC8	1249,990	0,03	0,03	0,03
PL151	Platform - General cross-section	S 235	NC8	1249,990	0,02	0,02	0,02
PL152	Platform - General cross-section	S 235	NC8	1250,010	0,03	0,03	0,03
PL153	Platform - General cross-section	S 235	NC8	1249,990	0,02	0,02	0,02
PL154	Platform - General cross-section	S 235	NC8	1249,990	0,03	0,03	0,03
PL155	Platform - General cross-section	S 235	NC1	2500,000	0,02	0,00	0,02
PL156	Platform - General cross-section	S 235	NC8	1250,010	0,03	0,03	0,03
PL157	Platform - General cross-section	S 235	NC7	2500,000	0,02	0,00	0,02
PL158	Platform - General cross-section	S 235	NC8	1249,990	0,03	0,03	0,03
PL159	Platform - General cross-section	S 235	NC8	1249,990	0,02	0,02	0,02
PL160	Platform - General cross-section	S 235	NC8	1406,250	0,03	0,03	0,03
PL161	Platform - General cross-section	S 235	NC8	1562,500	0,03	0,03	0,03
PL162	Platform - General cross-section	S 235	NC8	2500,000	0,04	0,01	0,04
PL163	Platform - General cross-section	S 235	NC8	1249,990	0,04	0,04	0,04
PL164	Platform - General cross-section	S 235	NC8	2500,000	0,04	0,01	0,04
PL165	Platform - General cross-section	S 235	NC8	1249,990	0,03	0,03	0,03
PL166	Platform - General cross-section	S 235	NC8	2500,000	0,04	0,01	0,04
PL167	Platform - General cross-section	S 235	NC8	1249,990	0,03	0,03	0,03
PL168	Platform - General cross-section	S 235	NC8	2500,000	0,04	0,01	0,04
PL169	Platform - General cross-section	S 235	NC8	1250,010	0,03	0,03	0,03
PL170	Platform - General cross-section	S 235	NC8	1562,500	0,04	0,03	0,04
PL171	Platform - General cross-section	S 235	NC8	1249,990	0,03	0,03	0,03
PL172	Platform - General cross-section	S 235	NC8	1249,990	0,04	0,04	0,04
PL173	Platform - General cross-section	S 235	NC8	1249,990	0,03	0,03	0,03
PL174	Platform - General cross-section	S 235	NC8	1249,990	0,04	0,04	0,04
PL175	Platform - General cross-section	S 235	NC8	1250,010	0,03	0,03	0,03
PL176	Platform - General cross-section	S 235	NC8	1250,010	0,04	0,04	0,04
PL177	Platform - General cross-section	S 235	NC8	1250,010	0,04	0,04	0,04
PL178	Platform - General cross-section	S 235	NC8	1250,010	0,04	0,04	0,04
PL179	Platform - General cross-section	S 235	NC8	937,500	0,03	0,03	0,03
PL180	Platform - General cross-section	S 235	NC8	1093,750	0,04	0,04	0,04
PL181	Platform - General cross-section	S 235	NC5	1249,990	0,19	0,19	0,19
PL182	Platform - General cross-section	S 235	NC4	2500,000	0,19	0,03	0,19
PL183	Platform - General cross-section	S 235	NC5	2500,000	0,19	0,03	0,19
PL184	Platform - General cross-section	S 235	NC5	1249,990	0,19	0,19	0,19
PL185	Platform - General cross-section	S 235	NC5	2500,000	0,19	0,03	0,19
PL186	Platform - General cross-section	S 235	NC4	1406,250	0,19	0,18	0,19
PL187	Platform - General cross-section	S 235	NC5	2500,000	0,19	0,03	0,19
PL188	Platform - General cross-section	S 235	NC4	1406,250	0,19	0,18	0,19
PL189	Platform - General cross-section	S 235	NC3	2500,000	0,19	0,03	0,19
PL190	Platform - General cross-section	S 235	NC4	1249,990	0,19	0,19	0,19
PL191	Platform - General cross-section	S 235	NC5	1249,990	0,19	0,19	0,19
PL192	Platform - General cross-section	S 235	NC4	1249,990	0,19	0,19	0,19
PL193	Platform - General cross-section	S 235	NC3	1249,990	0,19	0,19	0,19
PL194	Platform - General cross-section	S 235	NC4	1249,990	0,19	0,19	0,19
PL195	Platform - General cross-section	S 235	NC4	1250,010	0,19	0,19	0,19
PL196	Platform - General cross-section	S 235	NC4	1249,990	0,19	0,19	0,19
PL197	Platform - General cross-section	S 235	NC4	1249,990	0,19	0,19	0,19
PL198	Platform - General cross-section	S 235	NC3	1250,010	0,19	0,19	0,19
PL199	Platform - General cross-section	S 235	NC4	1249,990	0,19	0,19	0,19
PL200	Platform - General cross-section	S 235	NC4	1250,010	0,19	0,19	0,19
PL201	Platform - General cross-section	S 235	NC5	2500,000	0,35	0,07	0,35
PL202	Platform - General cross-section	S 235	NC4	1250,010	0,36	0,35	0,36
PL203	Platform - General cross-section	S 235	NC5	2500,000	0,35	0,06	0,35
PL204	Platform - General cross-section	S 235	NC4	1249,990	0,36	0,35	0,36
PL205	Platform - General cross-section	S 235	NC4	1249,990	0,35	0,35	0,35
PL206	Platform - General cross-section	S 235	NC4	1249,990	0,35	0,35	0,35
PL207	Platform - General cross-section	S 235	NC4	1249,990	0,35	0,35	0,35
PL208	Platform - General cross-section	S 235	NC4	1249,990	0,35	0,35	0,35
PL209	Platform - General cross-section	S 235	NC5	1249,990	0,35	0,35	0,35
PL210	Platform - General cross-section	S 235	NC4	1249,990	0,35	0,35	0,35
PL211	Platform - General cross-section	S 235	NC5	1249,990	0,35	0,35	0,35
PL212	Platform - General cross-section	S 235	NC4	1249,990	0,35	0,35	0,35
PL213	Platform - General cross-section	S 235	NC4	1249,990	0,35	0,35	0,35
PL214	Platform - General cross-section	S 235	NC4	1249,990	0,35	0,35	0,35
PL215	Platform - General cross-section	S 235	NC4	1249,990	0,35	0,35	0,35
PL216	Platform - General cross-section	S 235	NC4	1249,990	0,35	0,35	0,35
PL217	Platform - General cross-section	S 235	NC5	1249,990	0,35	0,35	0,35

Member	css	mat	Case	dx [mm]	un.check [-]	sec.check [-]	stab.check [-]
PL218	Platform - General cross-section	S 235	NC4	1250,010	0,36	0,36	0,36
PL219	Platform - General cross-section	S 235	NC5	0,000	0,35	0,07	0,35
PL220	Platform - General cross-section	S 235	NC4	1249,990	0,36	0,36	0,36
PL221	Platform - General cross-section	S 235	NC5	1249,990	0,19	0,19	0,19
PL222	Platform - General cross-section	S 235	NC4	1406,250	0,19	0,19	0,19
PL223	Platform - General cross-section	S 235	NC5	2500,000	0,19	0,03	0,19
PL224	Platform - General cross-section	S 235	NC5	1249,990	0,19	0,19	0,19
PL225	Platform - General cross-section	S 235	NC5	2500,000	0,19	0,03	0,19
PL226	Platform - General cross-section	S 235	NC4	1406,250	0,19	0,18	0,19
PL227	Platform - General cross-section	S 235	NC5	2500,000	0,19	0,03	0,19
PL228	Platform - General cross-section	S 235	NC4	1249,990	0,19	0,19	0,19
PL229	Platform - General cross-section	S 235	NC3	2500,000	0,19	0,03	0,19
PL230	Platform - General cross-section	S 235	NC4	1249,990	0,19	0,19	0,19
PL231	Platform - General cross-section	S 235	NC5	1249,990	0,19	0,19	0,19
PL232	Platform - General cross-section	S 235	NC4	1249,990	0,19	0,19	0,19
PL233	Platform - General cross-section	S 235	NC3	1249,990	0,19	0,19	0,19
PL234	Platform - General cross-section	S 235	NC4	1249,990	0,19	0,19	0,19
PL235	Platform - General cross-section	S 235	NC4	1249,990	0,19	0,19	0,19
PL236	Platform - General cross-section	S 235	NC4	1249,990	0,19	0,19	0,19
PL237	Platform - General cross-section	S 235	NC3	1249,990	0,19	0,19	0,19
PL238	Platform - General cross-section	S 235	NC3	1250,010	0,19	0,19	0,19
PL239	Platform - General cross-section	S 235	NC4	1250,010	0,19	0,19	0,19
PL240	Platform - General cross-section	S 235	NC4	1250,010	0,19	0,19	0,19
CP2	DIYAGONAL - CHS	S 235	NC8	0,000	0,10	0,10	0,00
CP12	DIYAGONAL - CHS	S 235	NC8	2931,024	0,06	0,06	0,00
C1	DİKME - CFCHS48.3X3	S 235	NC8	110,000	0,10	0,10	0,00
C2	DİKME - CFCHS48.3X3	S 235	NC8	0,000	0,11	0,11	0,00
C3	DİKME - CFCHS48.3X3	S 235	NC8	110,000	0,14	0,14	0,00
C4	DİKME - CFCHS48.3X3	S 235	NC8	0,000	0,18	0,18	0,00
C5	DİKME - CFCHS48.3X3	S 235	NC8	110,000	0,15	0,15	0,00
C6	DİKME - CFCHS48.3X3	S 235	NC8	0,000	0,19	0,19	0,00
C7	DİKME - CFCHS48.3X3	S 235	NC8	110,000	0,15	0,15	0,00
C8	DİKME - CFCHS48.3X3	S 235	NC8	0,000	0,19	0,19	0,00
C9	DİKME - CFCHS48.3X3	S 235	NC8	110,000	0,16	0,16	0,00
C10	DİKME - CFCHS48.3X3	S 235	NC8	0,000	0,19	0,19	0,00
C11	DİKME - CFCHS48.3X3	S 235	NC8	110,000	0,16	0,16	0,00
C12	DİKME - CFCHS48.3X3	S 235	NC8	0,000	0,20	0,20	0,00
C13	DIKME - CFCHS48.3X3	S 235	NC8	110,000	0,16	0,16	0,00
C14	DİKME - CFCHS48.3X3	S 235	NC8	0,000	0,19	0,19	0,00
C15	DİKME - CFCHS48.3X3	S 235	NC8	110,000	0,15	0,15	0,00
C16	DİKME - CFCHS48.3X3	S 235	NC8	0,000	0,19	0,19	0,00
C17	DİKME - CFCHS48.3X3	S 235	NC8	110,000	0,15	0,15	0,00
C18	DİKME - CFCHS48.3X3	S 235	NC8	0,000	0,19	0,19	0,00
C19	DİKME - CFCHS48.3X3	S 235	NC8	110,000	0,14	0,14	0,00
C20	DİKME - CFCHS48.3X3	S 235	NC8	0,000	0,18	0,18	0,00
C21	DIKME - CFCHS48.3X3	S 235	NC8	110,000	0,10	0,10	0,00
C22	DİKME - CFCHS48.3X3	S 235	NC8	0,000	0,11	0,11	0,00
C23	DIKME - CFCHS48.3X3	S 235	NC3	0,000	0,24	0,24	0,00
C24	DİKME - CFCHS48.3X3	S 235	NC3	0,000	0,26	0,26	0,00
C25	DİKME - CFCHS48.3X3	S 235	NC4	0,000	0,28	0,28	0,00
C26	DİKME - CFCHS48.3X3	S 235	NC5	0,000	0,32	0,32	0,00
C27	DIKME - CFCHS48.3X3	S 235	NC5	0,000	0,27	0,27	0,00
C28	DİKME - CFCHS48.3X3	S 235	NC5	0,000	0,28	0,28	0,00
C29	DIKME - CFCHS48.3X3	S 235	NC4	0,000	0,29	0,29	0,00
C30	DİKME - CFCHS48.3X3	S 235	NC5	0,000	0,31	0,31	0,00
C31	DİKME - CFCHS48.3X3	S 235	NC3	0,000	0,30	0,30	0,00
C32	DİKME - CFCHS48.3X3	S 235	NC3	0,000	0,31	0,31	0,00
C33	DİKME - CFCHS48.3X3	S 235	NC4	0,000	0,31	0,31	0,00
C34	DİKME - CFCHS48.3X3	S 235	NC5	0,000	0,36	0,36	0,00
C35	DİKME - CFCHS48.3X3	S 235	NC5	0,000	0,30	0,30	0,00
C36	DIKME - CFCHS48.3X3	S 235	NC5	0,000	0,31	0,31	0,00
C37	DİKME - CFCHS48.3X3	S 235	NC4	0,000	0,29	0,29	0,00
C38	DİKME - CFCHS48.3X3	S 235	NC5	0,000	0,31	0,31	0,00
C39	DİKME - CFCHS48.3X3	S 235	NC4	0,000	0,27	0,27	0,00
C40	DİKME - CFCHS48.3X3	S 235	NC4	0,000	0,28	0,28	0,00
C41	DİKME - CFCHS48.3X3	S 235	NC4	0,000	0,28	0,28	0,00
C42	DIKME - CFCHS48.3X3	S 235	NC3	0,000	0,32	0,32	0,00
C43	DİKME - CFCHS48.3X3	S 235	NC5	0,000	0,24	0,24	0,00
C44	DIKME - CFCHS48.3X3	S 235	NC5	0,000	0,26	0,26	0,00
B1088	ALT_PROFIL - RHS	S 235	NC8	700,000	0,27	0,27	0,27
B1089	ALT_PROFIL - RHS	S 235	NC8	700,000	0,35	0,35	0,35
B1090	ALT_PROFIL - RHS	S 235	NC8	700,000	0,37	0,37	0,36
B1091	ALT_PROFIL - RHS	S 235	NC8	700,000	0,39	0,39	0,38
B1092	ALT_PROFIL - RHS	S 235	NC8	700,000	0,40	0,40	0,39
B1093	ALT_PROFIL - RHS	S 235	NC8	700,000	0,42	0,42	0,41
B1094	ALT_PROFIL - RHS	S 235	NC8	700,000	0,40	0,40	0,39

Member	css	mat	Case	dx [mm]	un.check [-]	sec.check [-]	stab.check [-]
B1095	ALT_PROFIL - RHS	S 235	NC8	700,000	0,39	0,39	0,38
B1096	ALT_PROFIL - RHS	S 235	NC8	700,000	0,37	0,37	0,36
B1097	ALT_PROFIL - RHS	S 235	NC8	700,000	0,35	0,35	0,35
B1098	ALT_PROFIL - RHS	S 235	NC8	700,000	0,27	0,27	0,27
PL241	Platform - General cross-section	S 235	NC8	1250,010	0,02	0,02	0,02
PL242	Platform - General cross-section	S 235	NC8	2500,000	0,03	0,01	0,03
PL243	Platform - General cross-section	S 235	NC8	1249,990	0,02	0,02	0,02
PL244	Platform - General cross-section	S 235	NC8	1249,990	0,03	0,03	0,03
PL245	Platform - General cross-section	S 235	NC7	1718,750	0,02	0,02	0,02
PL246	Platform - General cross-section	S 235	NC8	2500,000	0,02	0,00	0,02
PL247	Platform - General cross-section	S 235	NC7	1875,000	0,02	0,02	0,02
PL248	Platform - General cross-section	S 235	NC8	1875,000	0,02	0,02	0,02
PL249	Platform - General cross-section	S 235	NC8	1250,010	0,02	0,02	0,02
PL250	Platform - General cross-section	S 235	NC8	2500,000	0,03	0,01	0,03
PL251	Platform - General cross-section	S 235	NC8	1249,990	0,02	0,02	0,02
PL252	Platform - General cross-section	S 235	NC8	1249,990	0,03	0,03	0,03
PL253	Platform - General cross-section	S 235	NC7	1249,990	0,02	0,02	0,02
PL254	Platform - General cross-section	S 235	NC8	1249,990	0,02	0,02	0,02
PL255	Platform - General cross-section	S 235	NC8	1250,010	0,02	0,02	0,02
PL256	Platform - General cross-section	S 235	NC8	1250,010	0,02	0,02	0,02
PL257	Platform - General cross-section	S 235	NC8	1250,010	0,03	0,02	0,03
PL258	Platform - General cross-section	S 235	NC8	2343,750	0,03	0,01	0,03
PL259	Platform - General cross-section	S 235	NC8	1249,990	0,02	0,02	0,02
PL260	Platform - General cross-section	S 235	NC8	1093,750	0,03	0,02	0,03
C45	DİKME - CFCHS48.3X3	S 235	NC3	0,000	0,26	0,26	0,00
C46	DİKME - CFCHS48.3X3	S 235	NC3	0,000	0,24	0,24	0,00
C47	DİKME - CFCHS48.3X3	S 235	NC5	0,000	0,32	0,32	0,00
C48	DİKME - CFCHS48.3X3	S 235	NC4	0,000	0,28	0,28	0,00
C49	DİKME - CFCHS48.3X3	S 235	NC5	0,000	0,28	0,28	0,00
C50	DİKME - CFCHS48.3X3	S 235	NC5	0,000	0,27	0,27	0,00
C51	DİKME - CFCHS48.3X3	S 235	NC5	0,000	0,31	0,31	0,00
C52	DİKME - CFCHS48.3X3	S 235	NC4	0,000	0,29	0,29	0,00
C53	DİKME - CFCHS48.3X3	S 235	NC3	0,000	0,31	0,31	0,00
C54	DİKME - CFCHS48.3X3	S 235	NC3	0,000	0,30	0,30	0,00
C55	DİKME - CFCHS48.3X3	S 235	NC5	0,000	0,36	0,36	0,00
C56	DİKME - CFCHS48.3X3	S 235	NC4	0,000	0,31	0,31	0,00
C57	DİKME - CFCHS48.3X3	S 235	NC5	0,000	0,31	0,31	0,00
C58	DIKME - CFCHS48.3X3	S 235	NC5	0,000	0,30	0,30	0,00
C59	DİKME - CFCHS48.3X3	S 235	NC5	0,000	0,31	0,31	0,00
C60	DİKME - CFCHS48.3X3	S 235	NC4	0,000	0,29	0,29	0,00
C61	DİKME - CFCHS48.3X3	S 235	NC4	0,000	0,28	0,28	0,00
C62	DİKME - CFCHS48.3X3	S 235	NC4	0,000	0,27	0,27	0,00
C63	DİKME - CFCHS48.3X3	S 235	NC3	0,000	0,32	0,32	0,00
C64	DİKME - CFCHS48.3X3	S 235	NC4	0,000	0,28	0,28	0,00
C65	DİKME - CFCHS48.3X3	S 235	NC5	0,000	0,26	0,26	0,00
C66	DIKME - CFCHS48.3X3	S 235	NC5	0,000	0,24	0,24	0,00
CP50	DIYAGONAL - CHS	S 235	NC8	2931,024	0,08	0,08	0,00
C67	TOPUKLUK - C	S 235	NC8	1249,990	0,06	0,01	0,06
C68	TOPUKLUK - C	S 235	NC8	1249,990	0,06	0,01	0,06
C69	TOPUKLUK - C	S 235	NC8	1250,010	0,26	0,01	0,26
C70	TOPUKLUK - C	S 235	NC8	1250,010	0,06	0,01	0,06
C71	TOPUKLUK - C	S 235	NC8	1250,010	0,12	0,01	0,12
C72	TOPUKLUK - C	S 235	NC8	1249,990	0,06	0,01	0,06
C73	TOPUKLUK - C	S 235	NC8	1249,990	0,22	0,01	0,22
C74	TOPUKLUK - C	S 235	NC8	1249,990	0,10	0,01	0,10
C75	TOPUKLUK - C	S 235	NC8	1250,010	0,10	0,01	0,10
C76	TOPUKLUK - C	S 235	NC8	1250,010	0,06	0,01	0,06
C77	TOPUKLUK - C	S 235	NC7	1249,990	0,06	0,01	0,06
C78	TOPUKLUK - C	S 235	NC8	1249,990	0,06	0,01	0,06
C79	TOPUKLUK - C	S 235	NC8	1250,010	0,15	0,01	0,15
C80	TOPUKLUK - C	S 235	NC8	1250,010	0,17	0,01	0,17
C81	TOPUKLUK - C	S 235	NC8	1249,990	0,06	0,01	0,06
C82	TOPUKLUK - C	S 235	NC8	1250,010	0,06	0,01	0,06
C83	TOPUKLUK - C	S 235	NC8	1249,990	0,17	0,01	0,17
C84	TOPUKLUK - C	S 235	NC8	1249,990	0,15	0,01	0,15
C85	TOPUKLUK - C	S 235	NC8	1250,010	0,06	0,01	0,06
C86	TOPUKLUK - C	S 235	NC8	1250,010	0,06	0,01	0,06
C87	TOPUKLUK - C	S 235	NC7	1250,010	0,06	0,01	0,06
C88	TOPUKLUK - C	S 235	NC8	1249,990	0,06	0,01	0,06
C89	TOPUKLUK - C	S 235	NC8	1249,990	0,14	0,01	0,14
C90	TOPUKLUK - C	S 235	NC8	1250,010	0,14	0,01	0,14
C91	TOPUKLUK - C	S 235	NC8	1249,990	0,06	0,01	0,06
C92	TOPUKLUK - C	S 235	NC8	1250,010	0,06	0,01	0,06
C93	TOPUKLUK - C	S 235	NC8	1249,990	0,14	0,01	0,14
C94	TOPUKLUK - C	S 235	NC8	1250,010	0,14	0,01	0,14
C95	TOPUKLUK - C	S 235	NC8	1250,010	0,06	0,01	0,06

Member	css	mat	Case	dx [mm]	un.check [-]	sec.check [-]	stab.check [-]
C96	TOPUKLUK - C	S 235	NC7	1250,010	0,06	0,01	0,06
C97	TOPUKLUK - C	S 235	NC8	1250,010	0,07	0,01	0,07
C98	TOPUKLUK - C	S 235	NC8	1249,990	0,06	0,01	0,06
C99	TOPUKLUK - C	S 235	NC8	1250,010	0,07	0,01	0,07
C100	TOPUKLUK - C	S 235	NC8	1250,010	0,11	0,01	0,11
C101	TOPUKLUK - C	S 235	NC8	1250,010	0,06	0,01	0,06
C102	TOPUKLUK - C	S 235	NC8	1249,990	0,06	0,01	0,06
C103	TOPUKLUK - C	S 235	NC8	1249,990	0,11	0,01	0,11
C104	TOPUKLUK - C	S 235	NC8	1249,990	0,07	0,01	0,07
C105	TOPUKLUK - C	S 235	NC8	1250,010	0,06	0,01	0,06
C106	TOPUKLUK - C	S 235	NC8	1249,990	0,07	0,01	0,07
C107	TOPUKLUK - C	S 235	NC7	1249,990	0,06	0,01	0,06
C108	TOPUKLUK - C	S 235	NC8	1249,990	0,06	0,01	0,06
C109	TOPUKLUK - C	S 235	NC8	1250,010	0,12	0,01	0,12
C110	TOPUKLUK - C	S 235	NC8	1250,010	0,12	0,01	0,12
C111	TOPUKLUK - C	S 235	NC8	1249,990	0,06	0,01	0,06
C112	TOPUKLUK - C	S 235	NC8	1250,010	0,06	0,01	0,06
C113	TOPUKLUK - C	S 235	NC8	1249,990	0,12	0,01	0,12
C114	TOPUKLUK - C	S 235	NC8	1249,990	0,12	0,01	0,12
C115	TOPUKLUK - C	S 235	NC8	1250,010	0,06	0,01	0,06
C116	TOPUKLUK - C	S 235	NC7	1249,990	0,06	0,01	0,06
C117	TOPUKLUK - C	S 235	NC8	1250,010	0,13	0,01	0,13
C118	TOPUKLUK - C	S 235	NC8	1250,010	0,07	0,01	0,07
C119	TOPUKLUK - C	S 235	NC8	1250,010	0,07	0,01	0,07
C120	TOPUKLUK - C	S 235	NC8	1250,010	0,06	0,01	0,06
C121	TOPUKLUK - C	S 235	NC8	1250,010	0,06	0,01	0,06
C122	TOPUKLUK - C	S 235	NC8	1249,990	0,06	0,01	0,06
C123	TOPUKLUK - C	S 235	NC8	1249,990	0,06	0,01	0,06
C124	TOPUKLUK - C	S 235	NC8	1249,990	0,07	0,01	0,07
C125	TOPUKLUK - C	S 235	NC8	1249,990	0,07	0,01	0,07
C126	TOPUKLUK - C	S 235	NC8	1249,990	0,13	0,01	0,13
C127	TOPUKLUK - C	S 235	NC7	1249,990	0,06	0,01	0,06
C128	TOPUKLUK - C	S 235	NC8	1249,990	0,06	0,01	0,06
C129	TOPUKLUK - C	S 235	NC8	1249,990	0,12	0,01	0,12
C130	TOPUKLUK - C	S 235	NC8	1250,010	0,12	0,01	0,12
C131	TOPUKLUK - C	S 235	NC8	1249,990	0,06	0,01	0,06
C132	TOPUKLUK - C	S 235	NC8	1250,010	0,06	0,01	0,06
C133	TOPUKLUK - C	S 235	NC8	1249,990	0,12	0,01	0,12
C134	TOPUKLUK - C	S 235	NC8	1250,010	0,12	0,01	0,12
C135	TOPUKLUK - C	S 235	NC8	1250,010	0,06	0,01	0,06
C136	TOPUKLUK - C	S 235	NC7	1249,990	0,06	0,01	0,06
C137	TOPUKLUK - C	S 235	NC8	1250,010	0,16	0,01	0,16
C138	TOPUKLUK - C	S 235	NC8	1250,010	0,07	0,01	0,07
C139	TOPUKLUK - C	S 235	NC8	1250,010	0,07	0,01	0,07
C140	TOPUKLUK - C	S 235	NC8	1250,010	0,06	0,01	0,06
C141	TOPUKLUK - C	S 235	NC8	1250,010	0,12	0,01	0,12
C142	TOPUKLUK - C	S 235	NC8	1249,990	0,12	0,01	0,12
C143	TOPUKLUK - C	S 235	NC8	1249,990	0,06	0,01	0,06
C144	TOPUKLUK - C	S 235	NC8	1249,990	0,07	0,01	0,07
C145	TOPUKLUK - C	S 235	NC8	1249,990	0,07	0,01	0,07
C146	TOPUKLUK - C	S 235	NC8	1249,990	0,15	0,01	0,15
C147	TOPUKLUK - C	S 235	NC8	1249,990	0,06	0,01	0,06
C148	TOPUKLUK - C	S 235	NC8	1249,990	0,06	0,01	0,06
C149	TOPUKLUK - C	S 235	NC8	1249,990	0,12	0,01	0,12
C150	TOPUKLUK - C	S 235	NC8	1250,010	0,12	0,01	0,12
C151	TOPUKLUK - C	S 235	NC8	1249,990	0,06	0,01	0,06
C152	TOPUKLUK - C	S 235	NC8	1250,010	0,06	0,01	0,06
C153	TOPUKLUK - C	S 235	NC8	1249,990	0,11	0,01	0,11
C154	TOPUKLUK - C	S 235	NC8	1250,010	0,12	0,01	0,12
C155	TOPUKLUK - C	S 235	NC8	1250,010	0,06	0,01	0,06
C156	TOPUKLUK - C	S 235	NC8	1250,010	0,06	0,01	0,06
C157	TOPUKLUK - C	S 235	NC3	1250,010	0,28	0,02	0,28
C158	TOPUKLUK - C	S 235	NC8	1249,990	0,07	0,01	0,07
C159	TOPUKLUK - C	S 235	NC8	1249,990	0,06	0,01	0,06
C160	TOPUKLUK - C	S 235	NC8	1250,010	0,06	0,01	0,06
C161	TOPUKLUK - C	S 235	NC8	1249,990	0,12	0,01	0,12
C162	TOPUKLUK - C	S 235	NC8	1250,010	0,12	0,01	0,12
C163	TOPUKLUK - C	S 235	NC8	1249,990	0,06	0,01	0,06
C164	TOPUKLUK - C	S 235	NC8	1250,010	0,06	0,01	0,06
C165	TOPUKLUK - C	S 235	NC8	1250,010	0,07	0,01	0,07
C166	TOPUKLUK - C	S 235	NC5	1249,990	0,28	0,02	0,28
C167	TOPUKLUK - C	S 235	NC5	1250,010	0,29	0,02	0,29
C168	TOPUKLUK - C	S 235	NC8	1250,010	0,06	0,01	0,06
C169	TOPUKLUK - C	S 235	NC8	1249,990	0,06	0,01	0,06
C170	TOPUKLUK - C	S 235	NC8	1250,010	0,06	0,01	0,06
C171	TOPUKLUK - C	S 235	NC8	1249,990	0,06	0,01	0,06

Member	css	mat	Case	dx [mm]	un.check [-]	sec.check [-]	stab.check [-]
C172	TOPUKLUK - C	S 235	NC8	1250,010	0,06	0,01	0,06
C173	TOPUKLUK - C	S 235	NC8	1249,990	0,06	0,01	0,06
C174	TOPUKLUK - C	S 235	NC8	1250,010	0,06	0,01	0,06
C175	TOPUKLUK - C	S 235	NC8	1249,990	0,06	0,01	0,06
C176	TOPUKLUK - C	S 235	NC5	1249,990	0,27	0,02	0,27
C177	TOPUKLUK - C	S 235	NC4	1250,010	0,31	0,02	0,31
C178	TOPUKLUK - C	S 235	NC8	1249,990	0,11	0,01	0,11
C179	TOPUKLUK - C	S 235	NC8	1249,990	0,06	0,01	0,06
C180	TOPUKLUK - C	S 235	NC8	1250,010	0,06	0,01	0,06
C181	TOPUKLUK - C	S 235	NC8	1249,990	0,15	0,01	0,15
C182	TOPUKLUK - C	S 235	NC8	1250,010	0,15	0,01	0,15
C183	TOPUKLUK - C	S 235	NC8	1249,990	0,06	0,01	0,06
C184	TOPUKLUK - C	S 235	NC8	1250,010	0,06	0,01	0,06
C185	TOPUKLUK - C	S 235	NC8	1250,010	0,07	0,01	0,07
C186	TOPUKLUK - C	S 235	NC4	1249,990	0,27	0,02	0,27
C187	TOPUKLUK - C	S 235	NC5	1249,990	0,15	0,01	0,15
C188	TOPUKLUK - C	S 235	NC5	1250,010	0,13	0,01	0,13
C189	TOPUKLUK - C	S 235	NC4	1249,990	0,15	0,01	0,15
C190	TOPUKLUK - C	S 235	NC4	1250,010	0,14	0,01	0,14
C191	TOPUKLUK - C	S 235	NC5	1249,990	0,15	0,01	0,15
C192	TOPUKLUK - C	S 235	NC4	1250,010	0,15	0,01	0,15
C193	TOPUKLUK - C	S 235	NC4	1249,990	0,14	0,01	0,14
C194	TOPUKLUK - C	S 235	NC4	1250,010	0,15	0,01	0,15
C195	TOPUKLUK - C	S 235	NC4	1249,990	0,13	0,01	0,13
C196	TOPUKLUK - C	S 235	NC4	1250,010	0,15	0,01	0,15
B1099	ÜST_PROFIL - RHS	S 235	NC4	0,000	0,21	0,04	0,21
B1100	ÜST_PROFIL - RHS	S 235	NC8	0,000	0,17	0,16	0,17
B1101	ÜST_PROFIL - RHS	S 235	NC8	0,000	0,13	0,11	0,13
B1102	ÜST_PROFIL - RHS	S 235	NC8	0,000	0,18	0,17	0,18
B1103	ÜST_PROFIL - RHS	S 235	NC4	0,000	0,27	0,03	0,27
B1104	ÜST_PROFIL - RHS	S 235	NC8	0,000	0,18	0,18	0,18
B1105	ÜST_PROFIL - RHS	S 235	NC4	0,000	0,22	0,03	0,22
B1106	ÜST_PROFIL - RHS	S 235	NC8	0,000	0,18	0,17	0,18
B1107	ÜST_PROFIL - RHS	S 235	NC4	0,000	0,25	0,04	0,25
B1108	ÜST_PROFIL - RHS	S 235	NC8	0,000	0,17	0,16	0,17
B1109	ÜST_PROFIL - RHS	S 235	NC8	0,000	0,13	0,11	0,13
CP57	DIYAGONAL - CHS	S 235	NC8	0,000	0,10	0,10	0,00
CP61	DIYAGONAL - CHS	S 235	NC8	0,000	0,11	0,11	0,00
CP65	DIYAGONAL - CHS	S 235	NC8	0,000	0,11	0,11	0,00
CP69	DIYAGONAL - CHS	S 235	NC8	0,000	0,10	0,10	0,00
CP93	DIYAGONAL - CHS	S 235	NC8	0,000	0,10	0,10	0,00
CP94	DIYAGONAL - CHS	S 235	NC8	2957,431	0,08	0,08	0,00
CP95	DIYAGONAL - CHS	S 235	NC8	2957,431	0,09	0,09	0,00
CP96	DIYAGONAL - CHS	S 235	NC8	2957,431	0,09	0,09	0,00
CP97	DIYAGONAL - CHS	S 235	NC8	2957,431	0,07	0,07	0,00
CP98	DIYAGONAL - CHS	S 235	NC8	2957,431	0,07	0,07	0,00
CP99	DIYAGONAL - CHS	S 235	NC8	2957,431	0,09	0,09	0,00
CP100	DIYAGONAL - CHS	S 235	NC8	2957,431	0,08	0,08	0,00
CP101	DIYAGONAL - CHS	S 235	NC8	2957,431	0,08	0,08	0,00
CP102	DIYAGONAL - CHS	S 235	NC8	2957,431	0,08	0,08	0,00
CP103	DIYAGONAL - CHS	S 235	NC8	2957,431	0,08	0,08	0,00
CP104	DIYAGONAL - CHS	S 235	NC8	2957,431	0,07	0,07	0,00
CP105	DIYAGONAL - CHS	S 235	NC8	0,000	0,11	0,11	0,00
CP106	DIYAGONAL - CHS	S 235	NC8	0,000	0,12	0,12	0,00
CP107	DIYAGONAL - CHS	S 235	NC8	0,000	0,12	0,12	0,00
CP108	DIYAGONAL - CHS	S 235	NC8	0,000	0,13	0,13	0,00
CP109	DIYAGONAL - CHS	S 235	NC8	0,000	0,12	0,12	0,00
CP110	DIYAGONAL - CHS	S 235	NC8	2931,024	0,08	0,08	0,00
CP111	DIYAGONAL - CHS	S 235	NC8	2931,024	0,08	0,08	0,00
CP112	DIYAGONAL - CHS	S 235	NC8	0,000	0,12	0,12	0,00
CP113	DIYAGONAL - CHS	S 235	NC8	0,000	0,13	0,13	0,00
CP114	DIYAGONAL - CHS	S 235	NC8	0,000	0,13	0,13	0,00
CP115	DIYAGONAL - CHS	S 235	NC8	0,000	0,14	0,14	0,00
CP116	DIYAGONAL - CHS	S 235	NC8	0,000	0,12	0,12	0,00
CP117	DIYAGONAL - CHS	S 235	NC8	0,000	0,11	0,11	0,00
CP118	DIYAGONAL - CHS	S 235	NC8	2957,431	0,09	0,09	0,00
CP119	DIYAGONAL - CHS	S 235	NC8	2957,431	0,10	0,10	0,00
CP120	DIYAGONAL - CHS	S 235	NC8	2957,431	0,10	0,10	0,00
CP121	DIYAGONAL - CHS	S 235	NC8	2957,431	0,08	0,08	0,00
CP122	DIYAGONAL - CHS	S 235	NC8	2957,431	0,08	0,08	0,00
CP123	DIYAGONAL - CHS	S 235	NC8	2957,431	0,11	0,11	0,00
CP124	DIYAGONAL - CHS	S 235	NC8	2957,431	0,09	0,09	0,00
CP125	DIYAGONAL - CHS	S 235	NC8	2957,431	0,10	0,10	0,00
CP126	DIYAGONAL - CHS	S 235	NC8	2957,431	0,10	0,10	0,00
CP127	DIYAGONAL - CHS	S 235	NC8	2957,431	0,08	0,08	0,00
CP128	DIYAGONAL - CHS	S 235	NC8	2957,431	0,08	0,08	0,00

Member	css	mat	Case	dx [mm]	un.check [-]	sec.check [-]	stab.check [-]
CP129	DIYAGONAL - CHS	S 235	NC8	0,000	0,12	0,12	0,00
CP130	DIYAGONAL - CHS	S 235	NC8	0,000	0,13	0,13	0,00
CP131	DIYAGONAL - CHS	S 235	NC8	0,000	0,13	0,13	0,00
CP132	DIYAGONAL - CHS	S 235	NC8	0,000	0,14	0,14	0,00
CP133	DIYAGONAL - CHS	S 235	NC8	0,000	0,12	0,12	0,00
CP134	DIYAGONAL - CHS	S 235	NC8	2931,024	0,06	0,06	0,00
CP135	DIYAGONAL - CHS	S 235	NC8	2931,024	0,08	0,08	0,00
CP136	DIYAGONAL - CHS	S 235	NC8	0,000	0,11	0,11	0,00
CP137	DIYAGONAL - CHS	S 235	NC8	0,000	0,12	0,12	0,00
CP138	DIYAGONAL - CHS	S 235	NC8	0,000	0,12	0,12	0,00
CP139	DIYAGONAL - CHS	S 235	NC8	0,000	0,13	0,13	0,00
CP140	DIYAGONAL - CHS	S 235	NC8	0,000	0,12	0,12	0,00
CP141	DIYAGONAL - CHS	S 235	NC8	0,000	0,09	0,09	0,00
CP142	DIYAGONAL - CHS	S 235	NC8	2957,431	0,08	0,08	0,00
CP143	DIYAGONAL - CHS	S 235	NC8	2957,431	0,08	0,08	0,00
CP144	DIYAGONAL - CHS	S 235	NC8	2957,431	0,08	0,08	0,00
CP145	DIYAGONAL - CHS	S 235	NC8	2957,431	0,08	0,08	0,00
CP146	DIYAGONAL - CHS	S 235	NC8	2957,431	0,07	0,07	0,00
CP147	DIYAGONAL - CHS	S 235	NC8	2957,431	0,10	0,10	0,00
CP148	DIYAGONAL - CHS	S 235	NC8	2957,431	0,08	0,08	0,00
CP149	DIYAGONAL - CHS	S 235	NC8	2957,431	0,09	0,09	0,00
CP150	DIYAGONAL - CHS	S 235	NC8	2957,431	0,09	0,09	0,00
CP151	DIYAGONAL - CHS	S 235	NC8	2957,431	0,07	0,07	0,00
CP152	DIYAGONAL - CHS	S 235	NC8	2957,431	0,07	0,07	0,00
CP153	DIYAGONAL - CHS	S 235	NC8	0,000	0,10	0,10	0,00
CP154	DIYAGONAL - CHS	S 235	NC8	0,000	0,10	0,10	0,00
CP155	DIYAGONAL - CHS	S 235	NC8	0,000	0,11	0,11	0,00
CP156	DIYAGONAL - CHS	S 235	NC8	0,000	0,11	0,11	0,00
CP157	DIYAGONAL - CHS	S 235	NC8	0,000	0,10	0,10	0,00
B1110	DİKME - CFCHS48.3X3	S 235	NC8	2000,000	0,31	0,31	0,00
B1111	DİKME - CFCHS48.3X3	S 235	NC8	110,000	0,25	0,25	0,00
B1112	DİKME - CFCHS48.3X3	S 235	NC8	2000,000	0,36	0,36	0,00
B1113	DİKME - CFCHS48.3X3	S 235	NC8	110,000	0,32	0,32	0,00
B1114	DİKME - CFCHS48.3X3	S 235	NC8	2000,000	0,42	0,42	0,00
B1115	DİKME - CFCHS48.3X3	S 235	NC8	110,000	0,35	0,35	0,00
B1116	DİKME - CFCHS48.3X3	S 235	NC8	2000,000	0,42	0,42	0,00
B1117	DİKME - CFCHS48.3X3	S 235	NC8	110,000	0,38	0,38	0,00
B1118	DIKME - CFCHS48.3X3	S 235	NC8	2000,000	0,46	0,46	0,00
B1119	DİKME - CFCHS48.3X3	S 235	NC8	110,000	0,39	0,39	0,00
B1120	DİKME - CFCHS48.3X3	S 235	NC8	2000,000	0,44	0,44	0,00
B1121	DİKME - CFCHS48.3X3	S 235	NC8	110,000	0,39	0,39	0,00
B1122	DİKME - CFCHS48.3X3	S 235	NC8	2000,000	0,46	0,46	0,00
B1123	DİKME - CFCHS48.3X3	S 235	NC8	110,000	0,39	0,39	0,00
B1124	DİKME - CFCHS48.3X3	S 235	NC8	2000,000	0,42	0,42	0,00
B1125	DİKME - CFCHS48.3X3	S 235	NC8	110,000	0,38	0,38	0,00
B1126	ALT_PROFIL - RHS	S 235	NC8	0,000	0,14	0,12	0,14
B1127	ALT_PROFIL - RHS	S 235	NC8	500,000	0,19	0,07	0,19
B1128	ALT_PROFIL - RHS	S 235	NC8	500,000	0,23	0,09	0,23
B1129	ALT_PROFIL - RHS	S 235	NC8	500,000	0,22	0,09	0,22
B1130	ALT_PROFIL - RHS	S 235	NC8	0,000	0,24	0,21	0,24
B1131	ALT_PROFIL - RHS	S 235	NC8	500,000	0,20	0,08	0,20
B1132	ALT_PROFIL - RHS	S 235	NC8	500,000	0,24	0,09	0,24
B1133	ALT_PROFIL - RHS	S 235	NC8	500,000	0,22	0,09	0,22
B1134	DIKME - CFCHS48.3X3	S 235	NC8	2000,000	0,42	0,42	0,00
B1135	DİKME - CFCHS48.3X3	S 235	NC8	110,000	0,35	0,35	0,00
B1136	ALT_PROFIL - RHS	S 235	NC8	500,000	0,23	0,09	0,23
B1137	DİKME - CFCHS48.3X3	S 235	NC8	2000,000	0,36	0,36	0,00
B1138	DİKME - CFCHS48.3X3	S 235	NC8	110,000	0,32	0,32	0,00
B1139	ALT_PROFIL - RHS	S 235	NC8	500,000	0,19	0,07	0,19
B1140	DİKME - CFCHS48.3X3	S 235	NC8	2000,000	0,31	0,31	0,00
B1141	DIKME - CFCHS48.3X3	S 235	NC8	110,000	0,26	0,26	0,00
B1142	ALT_PROFIL - RHS	S 235	NC8	0,000	0,14	0,12	0,14
B1143	ÜST_PROFIL - RHS	S 235	NC8	700,000	0,07	0,06	0,07
B1144	ÜST_PROFIL - RHS	S 235	NC8	700,000	0,09	0,09	0,09
B1145	ÜST_PROFIL - RHS	S 235	NC8	700,000	0,10	0,10	0,10
B1146	ÜST_PROFIL - RHS	S 235	NC8	700,000	0,11	0,10	0,11
B1147	ÜST_PROFIL - RHS	S 235	NC8	700,000	0,11	0,10	0,11
B1148	ÜST_PROFIL - RHS	S 235	NC8	700,000	0,11	0,11	0,11
B1149	ÜST_PROFIL - RHS	S 235	NC8	700,000	0,11	0,10	0,11
B1150	ÜST_PROFIL - RHS	S 235	NC8	700,000	0,11	0,10	0,11
B1151	ÜST_PROFIL - RHS	S 235	NC8	700,000	0,10	0,10	0,10
B1152	ÜST_PROFIL - RHS	S 235	NC8	700,000	0,09	0,09	0,09
B1153	ÜST_PROFIL - RHS	S 235	NC8	700,000	0,07	0,07	0,07
B1154	YATAY - CHS	S 235	NC8	1249,990	0,08	0,08	0,00
B1155	YATAY - CHS	S 235	NC8	1249,990	0,08	0,08	0,00
B1156	YATAY - CHS	S 235	NC8	1249,990	0,08	0,08	0,00

Member	css	mat	Case	dx [mm]	un.check [-]	sec.check [-]	stab.check [-]
B1157	YATAY - CHS	S 235	NC8	1249,990	0,08	0,08	0,00
B1158	YATAY - CHS	S 235	NC8	1249,990	0,08	0,08	0,00
B1159	YATAY - CHS	S 235	NC8	1249,990	0,08	0,08	0,00
B1160	YATAY - CHS	S 235	NC8	1249,990	0,08	0,08	0,00
B1161	YATAY - CHS	S 235	NC8	1249,990	0,08	0,08	0,00
B1162	YATAY - CHS	S 235	NC8	1249,990	0,08	0,08	0,00
B1163	YATAY - CHS	S 235	NC8	1249,990	0,08	0,08	0,00
B1164	YATAY - CHS	S 235	NC8	1249,990	0,08	0,08	0,00
B1165	YATAY - CHS	S 235	NC8	1249,990	0,08	0,08	0,00
B1166	YATAY - CHS	S 235	NC8	1249,990	0,08	0,08	0,00
B1167	YATAY - CHS	S 235	NC8	1249,990	0,08	0,08	0,00
B1168	YATAY - CHS	S 235	NC8	1249,990	0,08	0,08	0,00
B1169	YATAY - CHS	S 235	NC8	1249,990	0,08	0,08	0,00
B1170	YATAY - CHS	S 235	NC8	1249,990	0,08	0,08	0,00
B1171	YATAY - CHS	S 235	NC8	1249,990	0,08	0,08	0,00
B1172	YATAY - CHS	S 235	NC8	1249,990	0,08	0,08	0,00
B1173	YATAY - CHS	S 235	NC8	1249,990	0,08	0,08	0,00
PL261	Platform - General cross-section	S 235	NC8	1250,010	0,02	0,02	0,02
PL262	Platform - General cross-section	S 235	NC8	1093,750	0,03	0,03	0,03
PL263	Platform - General cross-section	S 235	NC2	1249,990	0,02	0,02	0,02
PL264	Platform - General cross-section	S 235	NC8	1250,010	0,03	0,03	0,03
PL265	Platform - General cross-section	S 235	NC8	2500,000	0,02	0,00	0,02
PL266	Platform - General cross-section	S 235	NC8	2500,000	0,03	0,01	0,03
PL267	Platform - General cross-section	S 235	NC8	1250,010	0,02	0,02	0,02
PL268	Platform - General cross-section	S 235	NC8	2500,000	0,03	0,01	0,03
PL269	Platform - General cross-section	S 235	NC8	2500,000	0,02	0,00	0,02
PL270	Platform - General cross-section	S 235	NC8	1249,990	0,03	0,03	0,03
PL271	Platform - General cross-section	S 235	NC8	1249,990	0,02	0,02	0,02
PL272	Platform - General cross-section	S 235	NC8	1250,010	0,03	0,03	0,03
PL273	Platform - General cross-section	S 235	NC8	1249,990	0,02	0,02	0,02
PL274	Platform - General cross-section	S 235	NC8	1249,990	0,03	0,03	0,03
PL275	Platform - General cross-section	S 235	NC3	1250,010	0,02	0,02	0,02
PL276	Platform - General cross-section	S 235	NC8	1250,010	0,03	0,03	0,03
PL277	Platform - General cross-section	S 235	NC7	2500,000	0,02	0,00	0,02
PL278	Platform - General cross-section	S 235	NC8	1249,990	0,03	0,03	0,03
PL279	Platform - General cross-section	S 235	NC8	1249,990	0,02	0,02	0,02
PL280	Platform - General cross-section	S 235	NC8	1406,250	0,03	0,03	0,03
C197	TOPUKLUK - C	S 235	NC8	1250,010	0,18	0,01	0,18
C198	TOPUKLUK - C	S 235	NC8	1250,010	0,07	0,01	0,07
C199	TOPUKLUK - C	S 235	NC8	1250,010	0,07	0,01	0,07
C200	TOPUKLUK - C	S 235	NC8	1250,010	0,06	0,01	0,06
C201	TOPUKLUK - C	S 235	NC8	1250,010	0,13	0,01	0,13
C202	TOPUKLUK - C	S 235	NC8	1249,990	0,13	0,01	0,13
C203	TOPUKLUK - C	S 235	NC8	1249,990	0,06	0,01	0,06
C204	TOPUKLUK - C	S 235	NC8	1249,990	0,07	0,01	0,07
C205	TOPUKLUK - C	S 235	NC8	1249,990	0,07	0,01	0,07
C206	TOPUKLUK - C	S 235	NC8	1249,990	0,18	0,01	0,18
CP158	DIYAGONAL - CHS	S 235	NC8	2957,431	0,09	0,09	0,00
CP159	DIYAGONAL - CHS	S 235	NC8	2957,431	0,09	0,09	0,00
CP160	DIYAGONAL - CHS	S 235	NC8	2957,431	0,10	0,10	0,00
CP161	DIYAGONAL - CHS	S 235	NC8	2957,431	0,10	0,10	0,00
CP162	DIYAGONAL - CHS	S 235	NC8	2957,431	0,09	0,09	0,00
CP163	DIYAGONAL - CHS	S 235	NC8	2957,431	0,09	0,09	0,00
B1174	DİKME - CFCHS48.3X3	S 235	NC8	110,000	0,33	0,33	0,00
B1175	DİKME - CFCHS48.3X3	S 235	NC8	2000,000	0,29	0,29	0,00
B1176	DİKME - CFCHS48.3X3	S 235	NC8	110,000	0,47	0,47	0,00
B1177	DİKME - CFCHS48.3X3	S 235	NC8	0,000	0,37	0,37	0,00
B1178	DİKME - CFCHS48.3X3	S 235	NC8	110,000	0,44	0,44	0,00
B1179	DİKME - CFCHS48.3X3	S 235	NC8	0,000	0,39	0,39	0,00
B1180	DİKME - CFCHS48.3X3	S 235	NC8	110,000	0,46	0,46	0,00
B1181	DIKME - CFCHS48.3X3	S 235	NC8	0,000	0,42	0,42	0,00
B1182	DİKME - CFCHS48.3X3	S 235	NC8	110,000	0,48	0,48	0,00
B1183	DİKME - CFCHS48.3X3	S 235	NC8	0,000	0,42	0,42	0,00
B1184	DİKME - CFCHS48.3X3	S 235	NC8	110,000	0,57	0,57	0,00
B1185	DİKME - CFCHS48.3X3	S 235	NC8	0,000	0,44	0,44	0,00
B1186	DİKME - CFCHS48.3X3	S 235	NC8	110,000	0,48	0,48	0,00
B1187	DIKME - CFCHS48.3X3	S 235	NC8	0,000	0,42	0,42	0,00
B1188	DİKME - CFCHS48.3X3	S 235	NC8	110,000	0,46	0,46	0,00
B1189	DIKME - CFCHS48.3X3	S 235	NC8	0,000	0,42	0,42	0,00
B1190	ALT_PROFIL - RHS	S 235	NC8	200,000	0,18	0,09	0,18
B1191	ALT_PROFIL - RHS	S 235	NC8	200,000	0,22	0,12	0,22
B1192	ALT_PROFIL - RHS	S 235	NC8	200,000	0,21	0,13	0,21
B1193	ALT_PROFIL - RHS	S 235	NC8	200,000	0,21	0,13	0,21
B1194	ALT_PROFIL - RHS	S 235	NC8	200,000	0,21	0,14	0,21
B1195	ALT_PROFIL - RHS	S 235	NC8	200,000	0,20	0,13	0,20
B1196	ALT_PROFIL - RHS	S 235	NC8	200,000	0,21	0,14	0,21

Member	css	mat	Case	dx [mm]	un.check [-]	sec.check [-]	stab.check [-]
B1197	ALT_PROFIL - RHS	S 235	NC8	200,000	0,21	0,13	0,21
B1198	DİKME - CFCHS48.3X3	S 235	NC8	110,000	0,44	0,44	0,00
B1199	DİKME - CFCHS48.3X3	S 235	NC8	0,000	0,39	0,39	0,00
B1200	ALT_PROFIL - RHS	S 235	NC8	200,000	0,21	0,13	0,21
B1201	DİKME - CFCHS48.3X3	S 235	NC8	110,000	0,47	0,47	0,00
B1202	DİKME - CFCHS48.3X3	S 235	NC8	0,000	0,37	0,37	0,00
B1203	ALT_PROFIL - RHS	S 235	NC8	200,000	0,22	0,12	0,22
B1204	DİKME - CFCHS48.3X3	S 235	NC8	110,000	0,33	0,33	0,00
B1205	DİKME - CFCHS48.3X3	S 235	NC8	2000,000	0,29	0,29	0,00
B1206	ALT_PROFIL - RHS	S 235	NC8	200,000	0,18	0,09	0,18
B1207	ÜST_PROFIL - RHS	S 235	NC8	700,000	0,11	0,09	0,11
B1208	ÜST_PROFIL - RHS	S 235	NC8	0,000	0,15	0,13	0,15
B1209	ÜST_PROFIL - RHS	S 235	NC8	700,000	0,12	0,11	0,12
B1210	ÜST_PROFIL - RHS	S 235	NC8	700,000	0,13	0,12	0,13
B1211	ÜST_PROFIL - RHS	S 235	NC8	700,000	0,14	0,12	0,14
B1212	ÜST_PROFIL - RHS	S 235	NC8	0,000	0,18	0,16	0,18
B1213	ÜST_PROFIL - RHS	S 235	NC8	700,000	0,14	0,12	0,14
B1214	ÜST_PROFIL - RHS	S 235	NC8	700,000	0,13	0,12	0,13
B1215	ÜST_PROFIL - RHS	S 235	NC8	700,000	0,12	0,11	0,12
B1216	ÜST_PROFIL - RHS	S 235	NC8	0,000	0,15	0,13	0,15
B1217	ÜST_PROFIL - RHS	S 235	NC8	700,000	0,12	0,09	0,12
B1218	YATAY - CHS	S 235	NC8	1250,010	0,08	0,08	0,00
B1219	YATAY - CHS	S 235	NC8	1249,990	0,08	0,08	0,00
B1220	YATAY - CHS	S 235	NC8	1249,990	0,08	0,08	0,00
B1221	YATAY - CHS	S 235	NC8	1249,990	0,08	0,08	0,00
B1222	YATAY - CHS	S 235	NC8	1249,990	0,08	0,08	0,00
B1223	YATAY - CHS	S 235	NC8	1249,990	0,08	0,08	0,00
B1224	YATAY - CHS	S 235	NC8	1249,990	0,08	0,08	0,00
B1225	YATAY - CHS	S 235	NC8	1249,990	0,08	0,08	0,00
B1226	YATAY - CHS	S 235	NC8	1249,990	0,08	0,08	0,00
B1227	YATAY - CHS	S 235	NC8	1249,990	0,08	0,08	0,00
B1228	YATAY - CHS	S 235	NC8	1249,990	0,08	0,08	0,00
B1229	YATAY - CHS	S 235	NC8	1249,990	0,08	0,08	0,00
B1230	YATAY - CHS	S 235	NC8	1249,990	0,08	0,08	0,00
B1231	YATAY - CHS	S 235	NC8	1249,990	0,08	0,08	0,00
B1232	YATAY - CHS	S 235	NC8	1249,990	0,08	0,08	0,00
B1233	YATAY - CHS	S 235	NC8	1249,990	0,08	0,08	0,00
B1234	YATAY - CHS	S 235	NC8	1249,990	0,08	0,08	0,00
B1235	YATAY - CHS	S 235	NC8	1249,990	0,08	0,08	0,00
B1236	YATAY - CHS	S 235	NC8	1249,990	0,08	0,08	0,00
B1237	YATAY - CHS	S 235	NC8	1249,990	0,08	0,08	0,00
PL281	Platform - General cross-section	S 235	NC8	1562,500	0,03	0,03	0,03
PL282	Platform - General cross-section	S 235	NC8	2500,000	0,04	0,01	0,04
PL283	Platform - General cross-section	S 235	NC8	1249,990	0,04	0,04	0,04
PL284	Platform - General cross-section	S 235	NC8	2500,000	0,04	0,01	0,04
PL285	Platform - General cross-section	S 235	NC8	1249,990	0,03	0,03	0,03
PL286	Platform - General cross-section	S 235	NC8	2500,000	0,04	0,01	0,04
PL287	Platform - General cross-section	S 235	NC8	1249,990	0,03	0,03	0,03
PL288	Platform - General cross-section	S 235	NC8	2500,000	0,04	0,01	0,04
PL289	Platform - General cross-section	S 235	NC8	1250,010	0,03	0,03	0,03
PL290	Platform - General cross-section	S 235	NC8	1562,500	0,04	0,03	0,04
PL291	Platform - General cross-section	S 235	NC8	1249,990	0,03	0,03	0,03
PL292	Platform - General cross-section	S 235	NC8	1249,990	0,04	0,04	0,04
PL293	Platform - General cross-section	S 235	NC8	1250,010	0,03	0,03	0,03
PL294	Platform - General cross-section	S 235	NC8	1249,990	0,04	0,04	0,04
PL295	Platform - General cross-section	S 235	NC8	1250,010	0,03	0,03	0,03
PL296	Platform - General cross-section	S 235	NC8	1250,010	0,04	0,04	0,04
PL297	Platform - General cross-section	S 235	NC8	1250,010	0,04	0,04	0,04
PL298	Platform - General cross-section	S 235	NC8	1250,010	0,04	0,04	0,04
PL299	Platform - General cross-section	S 235	NC8	937,500	0,03	0,03	0,03
PL300	Platform - General cross-section	S 235	NC8	1093,750	0,04	0,04	0,04
C207	TOPUKLUK - C	S 235	NC7	1249,990	0,12	0,01	0,12
C208	TOPUKLUK - C	S 235	NC8	1249,990	0,06	0,01	0,06
C209	TOPUKLUK - C	S 235	NC8	1249,990	0,12	0,01	0,12
C210	TOPUKLUK - C	S 235	NC8	1250,010	0,12	0,01	0,12
C211	TOPUKLUK - C	S 235	NC8	1249,990	0,06	0,01	0,06
C212	TOPUKLUK - C	S 235	NC8	1250,010	0,06	0,01	0,06
C213	TOPUKLUK - C	S 235	NC8	1249,990	0,11	0,01	0,11
C214	TOPUKLUK - C	S 235	NC8	1250,010	0,11	0,01	0,11
C215	TOPUKLUK - C	S 235	NC8	1249,990	0,06	0,01	0,06
C216	TOPUKLUK - C	S 235	NC8	1250,010	0,07	0,01	0,07
CP164	DIYAGONAL - CHS	S 235	NC8	0,000	0,11	0,11	0,00
CP165	DIYAGONAL - CHS	S 235	NC8	0,000	0,13	0,13	0,00
CP166	DIYAGONAL - CHS	S 235	NC8	0,000	0,14	0,14	0,00
CP167	DIYAGONAL - CHS	S 235	NC8	0,000	0,14	0,14	0,00
CP168	DIYAGONAL - CHS	S 235	NC8	0,000	0,13	0,13	0,00

Member	css	mat	Case	dx [mm]	un.check [-]	sec.check [-]	stab.check [-]
CP169	DIYAGONAL - CHS	S 235	NC8	0,000	0,11	0,11	0,00
B1238	DİKME - CFCHS48.3X3	S 235	NC8	2000,000	0,32	0,32	0,00
B1239	DİKME - CFCHS48.3X3	S 235	NC8	110,000	0,26	0,26	0,00
B1240	DİKME - CFCHS48.3X3	S 235	NC8	2000,000	0,37	0,37	0,00
B1241	DİKME - CFCHS48.3X3	S 235	NC8	110,000	0,32	0,32	0,00
B1242	DİKME - CFCHS48.3X3	S 235	NC8	2000,000	0,43	0,43	0,00
B1243	DİKME - CFCHS48.3X3	S 235	NC8	110,000	0,36	0,36	0,00
B1244	DİKME - CFCHS48.3X3	S 235	NC8	2000,000	0,43	0,43	0,00
B1245	DİKME - CFCHS48.3X3	S 235	NC8	110,000	0,38	0,38	0,00
B1246	DİKME - CFCHS48.3X3	S 235	NC8	2000,000	0,47	0,47	0,00
B1247	DİKME - CFCHS48.3X3	S 235	NC8	110,000	0,40	0,40	0,00
B1248	DİKME - CFCHS48.3X3	S 235	NC8	2000,000	0,45	0,45	0,00
B1249	DİKME - CFCHS48.3X3	S 235	NC8	110,000	0,40	0,40	0,00
B1250	DİKME - CFCHS48.3X3	S 235	NC8	2000,000	0,47	0,47	0,00
B1251	DİKME - CFCHS48.3X3	S 235	NC8	110,000	0,40	0,40	0,00
B1252	DİKME - CFCHS48.3X3	S 235	NC8	2000,000	0,43	0,43	0,00
B1253	DİKME - CFCHS48.3X3	S 235	NC8	110,000	0,38	0,38	0,00
B1254	ALT_PROFIL - RHS	S 235	NC8	0,000	0,15	0,12	0,15
B1255	ALT_PROFIL - RHS	S 235	NC8	500,000	0,20	0,08	0,20
B1256	ALT_PROFIL - RHS	S 235	NC8	500,000	0,24	0,09	0,24
B1257	ALT_PROFIL - RHS	S 235	NC8	500,000	0,23	0,09	0,23
B1258	ALT_PROFIL - RHS	S 235	NC8	500,000	0,25	0,09	0,25
B1259	ALT_PROFIL - RHS	S 235	NC8	500,000	0,21	0,09	0,21
B1260	ALT_PROFIL - RHS	S 235	NC8	500,000	0,25	0,09	0,25
B1261	ALT_PROFIL - RHS	S 235	NC8	500,000	0,23	0,09	0,23
B1262	DİKME - CFCHS48.3X3	S 235	NC8	2000,000	0,43	0,43	0,00
B1263	DİKME - CFCHS48.3X3	S 235	NC8	110,000	0,36	0,36	0,00
B1264	ALT_PROFIL - RHS	S 235	NC8	500,000	0,24	0,09	0,24
B1265	DİKME - CFCHS48.3X3	S 235	NC8	2000,000	0,37	0,37	0,00
B1266	DİKME - CFCHS48.3X3	S 235	NC8	110,000	0,32	0,32	0,00
B1267	ALT_PROFIL - RHS	S 235	NC8	500,000	0,20	0,08	0,20
B1268	DİKME - CFCHS48.3X3	S 235	NC8	2000,000	0,32	0,32	0,00
B1269	DİKME - CFCHS48.3X3	S 235	NC8	110,000	0,26	0,26	0,00
B1270	ALT_PROFIL - RHS	S 235	NC8	0,000	0,15	0,12	0,15
B1271	ÜST_PROFIL - RHS	S 235	NC8	700,000	0,07	0,06	0,07
B1272	ÜST_PROFIL - RHS	S 235	NC8	700,000	0,10	0,09	0,10
B1273	ÜST_PROFIL - RHS	S 235	NC8	700,000	0,11	0,10	0,11
B1274	ÜST_PROFIL - RHS	S 235	NC8	700,000	0,11	0,10	0,11
B1275	ÜST_PROFIL - RHS	S 235	NC8	700,000	0,11	0,10	0,11
B1276	ÜST_PROFIL - RHS	S 235	NC8	700,000	0,12	0,11	0,12
B1277	ÜST_PROFIL - RHS	S 235	NC8	700,000	0,11	0,10	0,11
B1278	ÜST_PROFIL - RHS	S 235	NC8	700,000	0,11	0,10	0,11
B1279	ÜST_PROFIL - RHS	S 235	NC8	700,000	0,11	0,10	0,11
B1280	ÜST_PROFIL - RHS	S 235	NC8	700,000	0,10	0,09	0,10
B1281	ÜST_PROFIL - RHS	S 235	NC8	700,000	0,07	0,06	0,07
B1282	YATAY - CHS	S 235	NC8	1249,990	0,08	0,08	0,00
B1283	YATAY - CHS	S 235	NC8	1249,990	0,08	0,08	0,00
B1284	YATAY - CHS	S 235	NC8	1249,990	0,08	0,08	0,00
B1285	YATAY - CHS	S 235	NC8	1249,990	0,08	0,08	0,00
B1286	YATAY - CHS	S 235	NC8	1249,990	0,08	0,08	0,00
B1287	YATAY - CHS	S 235	NC8	1249,990	0,08	0,08	0,00
B1288	YATAY - CHS	S 235	NC8	1249,990	0,08	0,08	0,00
B1289	YATAY - CHS	S 235	NC8	1249,990	0,08	0,08	0,00
B1290	YATAY - CHS	S 235	NC8	1249,990	0,08	0,08	0,00
B1291	YATAY - CHS	S 235	NC8	1249,990	0,08	0,08	0,00
B1292	YATAY - CHS	S 235	NC8	1249,990	0,08	0,08	0,00
B1293	YATAY - CHS	S 235	NC8	1249,990	0,08	0,08	0,00
B1294	YATAY - CHS	S 235	NC8	1249,990	0,08	0,08	0,00
B1295	YATAY - CHS	S 235	NC8	1249,990	0,08	0,08	0,00
B1296	YATAY - CHS	S 235	NC8	1249,990	0,08	0,08	0,00
B1297	YATAY - CHS	S 235	NC8	1249,990	0,08	0,08	0,00
B1298	YATAY - CHS	S 235	NC8	1249,990	0,08	0,08	0,00
B1299	YATAY - CHS	S 235	NC8	1249,990	0,08	0,08	0,00
B1300	YATAY - CHS	S 235	NC8	1249,990	0,08	0,08	0,00
B1301	YATAY - CHS	S 235	NC8	1249,990	0,08	0,08	0,00
PL301	Platform - General cross-section	S 235	NC8	1250,010	0,02	0,02	0,02
PL302	Platform - General cross-section	S 235	NC8	1093,750	0,03	0,03	0,03
PL303	Platform - General cross-section	S 235	NC2	1249,990	0,02	0,02	0,02
PL304	Platform - General cross-section	S 235	NC8	1250,010	0,03	0,03	0,03
PL305	Platform - General cross-section	S 235	NC8	2500,000	0,02	0,00	0,02
PL306	Platform - General cross-section	S 235	NC8	2500,000	0,03	0,01	0,03
PL307	Platform - General cross-section	S 235	NC8	1250,010	0,02	0,02	0,02
PL308	Platform - General cross-section	S 235	NC8	2500,000	0,03	0,01	0,03
PL309	Platform - General cross-section	S 235	NC8	2500,000	0,02	0,00	0,02
PL310	Platform - General cross-section	S 235	NC1	2500,000	0,03	0,01	0,03
PL311	Platform - General cross-section	S 235	NC8	1249,990	0,02	0,02	0,02

Member	css	mat	Case	dx [mm]	un.check [-]	sec.check [-]	stab.check [-]
PL312	Platform - General cross-section	S 235	NC1	1250,010	0,03	0,03	0,03
PL313	Platform - General cross-section	S 235	NC8	1249,990	0,02	0,02	0,02
PL314	Platform - General cross-section	S 235	NC8	1249,990	0,03	0,03	0,03
PL315	Platform - General cross-section	S 235	NC3	1250,010	0,02	0,02	0,02
PL316	Platform - General cross-section	S 235	NC8	1250,010	0,03	0,03	0,03
PL317	Platform - General cross-section	S 235	NC7	2500,000	0,02	0,00	0,02
PL318	Platform - General cross-section	S 235	NC8	1249,990	0,03	0,03	0,03
PL319	Platform - General cross-section	S 235	NC8	1249,990	0,02	0,02	0,02
PL320	Platform - General cross-section	S 235	NC8	1406,250	0,03	0,03	0,03
C217	TOPUKLUK - C	S 235	NC8	1250,010	0,20	0,01	0,20
C218	TOPUKLUK - C	S 235	NC8	1250,010	0,07	0,01	0,07
C219	TOPUKLUK - C	S 235	NC8	1250,010	0,07	0,01	0,07
C220	TOPUKLUK - C	S 235	NC8	1249,990	0,06	0,01	0,06
C221	TOPUKLUK - C	S 235	NC8	1250,010	0,14	0,01	0,14
C222	TOPUKLUK - C	S 235	NC8	1249,990	0,13	0,01	0,13
C223	TOPUKLUK - C	S 235	NC8	1250,010	0,06	0,01	0,06
C224	TOPUKLUK - C	S 235	NC8	1249,990	0,07	0,01	0,07
C225	TOPUKLUK - C	S 235	NC8	1249,990	0,07	0,01	0,07
C226	TOPUKLUK - C	S 235	NC8	1249,990	0,19	0,01	0,19
CP170	DIYAGONAL - CHS	S 235	NC8	2957,431	0,09	0,09	0,00
CP171	DIYAGONAL - CHS	S 235	NC8	2957,431	0,09	0,09	0,00
CP172	DIYAGONAL - CHS	S 235	NC8	2957,431	0,10	0,10	0,00
CP173	DIYAGONAL - CHS	S 235	NC8	2957,431	0,10	0,10	0,00
CP174	DIYAGONAL - CHS	S 235	NC8	2957,431	0,09	0,09	0,00
CP175	DIYAGONAL - CHS	S 235	NC8	2957,431	0,09	0,09	0,00
B1302	DİKME - CFCHS48.3X3	S 235	NC8	110,000	0,33	0,33	0,00
B1303	DİKME - CFCHS48.3X3	S 235	NC8	2000,000	0,29	0,29	0,00
B1304	DİKME - CFCHS48.3X3	S 235	NC8	110,000	0,47	0,47	0,00
B1305	DİKME - CFCHS48.3X3	S 235	NC8	0,000	0,38	0,38	0,00
B1306	DİKME - CFCHS48.3X3	S 235	NC8	110,000	0,44	0,44	0,00
B1307	DİKME - CFCHS48.3X3	S 235	NC8	0,000	0,40	0,40	0,00
B1308	DİKME - CFCHS48.3X3	S 235	NC8	110,000	0,47	0,47	0,00
B1309	DİKME - CFCHS48.3X3	S 235	NC8	0,000	0,42	0,42	0,00
B1310	DİKME - CFCHS48.3X3	S 235	NC8	110,000	0,49	0,49	0,00
B1311	DİKME - CFCHS48.3X3	S 235	NC8	0,000	0,43	0,43	0,00
B1312	DİKME - CFCHS48.3X3	S 235	NC8	110,000	0,57	0,57	0,00
B1313	DİKME - CFCHS48.3X3	S 235	NC8	0,000	0,45	0,45	0,00
B1314	DIKME - CFCHS48.3X3	S 235	NC8	110,000	0,49	0,49	0,00
B1315	DİKME - CFCHS48.3X3	S 235	NC8	0,000	0,43	0,43	0,00
B1316	DİKME - CFCHS48.3X3	S 235	NC8	110,000	0,47	0,47	0,00
B1317	DİKME - CFCHS48.3X3	S 235	NC8	0,000	0,42	0,42	0,00
B1318	ALT_PROFIL - RHS	S 235	NC8	200,000	0,18	0,08	0,18
B1319	ALT_PROFIL - RHS	S 235	NC8	200,000	0,22	0,12	0,22
B1320	ALT_PROFIL - RHS	S 235	NC8	200,000	0,21	0,13	0,21
B1321	ALT_PROFIL - RHS	S 235	NC8	200,000	0,21	0,14	0,21
B1322	ALT_PROFIL - RHS	S 235	NC8	200,000	0,21	0,14	0,21
B1323	ALT_PROFIL - RHS	S 235	NC8	200,000	0,20	0,13	0,20
B1324	ALT_PROFIL - RHS	S 235	NC8	200,000	0,21	0,14	0,21
B1325	ALT_PROFIL - RHS	S 235	NC8	200,000	0,21	0,14	0,21
B1326	DİKME - CFCHS48.3X3	S 235	NC8	110,000	0,44	0,44	0,00
B1327	DİKME - CFCHS48.3X3	S 235	NC8	0,000	0,40	0,40	0,00
B1328	ALT_PROFIL - RHS	S 235	NC8	200,000	0,21	0,13	0,21
B1329	DİKME - CFCHS48.3X3	S 235	NC8	110,000	0,47	0,47	0,00
B1330	DIKME - CFCHS48.3X3	S 235	NC8	0,000	0,38	0,38	0,00
B1331	ALT_PROFIL - RHS	S 235	NC8	200,000	0,22	0,12	0,22
B1332	DİKME - CFCHS48.3X3	S 235	NC8	110,000	0,33	0,33	0,00
B1333	DİKME - CFCHS48.3X3	S 235	NC8	2000,000	0,29	0,29	0,00
B1334	ALT_PROFIL - RHS	S 235	NC8	200,000	0,18	0,09	0,18
B1335	ÜST_PROFIL - RHS	S 235	NC8	700,000	0,12	0,09	0,12
B1336	ÜST_PROFIL - RHS	S 235	NC8	0,000	0,15	0,13	0,15
B1337	ÜST_PROFIL - RHS	S 235	NC8	700,000	0,12	0,10	0,12
B1338	ÜST_PROFIL - RHS	S 235	NC8	700,000	0,13	0,11	0,13
B1339	ÜST_PROFIL - RHS	S 235	NC8	700,000	0,14	0,11	0,14
B1340	ÜST_PROFIL - RHS	S 235	NC8	0,000	0,18	0,16	0,18
B1341	ÜST_PROFIL - RHS	S 235	NC8	700,000	0,14	0,11	0,14
B1342	ÜST_PROFIL - RHS	S 235	NC8	700,000	0,13	0,11	0,13
B1343	ÜST_PROFIL - RHS	S 235	NC8	700,000	0,12	0,10	0,12
B1344	ÜST_PROFIL - RHS	S 235	NC8	0,000	0,15	0,13	0,15
B1345	ÜST_PROFIL - RHS	S 235	NC8	700,000	0,12	0,09	0,12
B1346	YATAY - CHS	S 235	NC8	1249,990	0,08	0,08	0,00
B1347	YATAY - CHS	S 235	NC8	1249,990	0,08	0,08	0,00
B1348	YATAY - CHS	S 235	NC8	1249,990	0,08	0,08	0,00
B1349	YATAY - CHS	S 235	NC8	1249,990	0,08	0,08	0,00
B1350	YATAY - CHS	S 235	NC8	1249,990	0,08	0,08	0,00
B1351	YATAY - CHS	S 235	NC8	1249,990	0,08	0,08	0,00
B1352	YATAY - CHS	S 235	NC8	1249,990	0,08	0,08	0,00

Member	css	mat	Case	dx [mm]	un.check [-]	sec.check [-]	stab.check [-]
B1353	YATAY - CHS	S 235	NC8	1249,990	0,08	0,08	0,00
B1354	YATAY - CHS	S 235	NC8	1249,990	0,08	0,08	0,00
B1355	YATAY - CHS	S 235	NC8	1249,990	0,08	0,08	0,00
B1356	YATAY - CHS	S 235	NC8	1249,990	0,08	0,08	0,00
B1357	YATAY - CHS	S 235	NC8	1249,990	0,08	0,08	0,00
B1358	YATAY - CHS	S 235	NC8	1249,990	0,08	0,08	0,00
B1359	YATAY - CHS	S 235	NC8	1249,990	0,08	0,08	0,00
B1360	YATAY - CHS	S 235	NC8	1249,990	0,08	0,08	0,00
B1361	YATAY - CHS	S 235	NC8	1249,990	0,08	0,08	0,00
B1362	YATAY - CHS	S 235	NC8	1249,990	0,08	0,08	0,00
B1363	YATAY - CHS	S 235	NC8	1249,990	0,08	0,08	0,00
B1364	YATAY - CHS	S 235	NC8	1249,990	0,08	0,08	0,00
B1365	YATAY - CHS	S 235	NC8	1250,010	0,08	0,08	0,00
PL321	Platform - General cross-section	S 235	NC8	1562,500	0,03	0,03	0,03
PL322	Platform - General cross-section	S 235	NC8	2500,000	0,04	0,01	0,04
PL323	Platform - General cross-section	S 235	NC8	1249,990	0,04	0,04	0,04
PL324	Platform - General cross-section	S 235	NC8	2500,000	0,04	0,01	0,04
PL325	Platform - General cross-section	S 235	NC8	1249,990	0,03	0,03	0,03
PL326	Platform - General cross-section	S 235	NC8	2500,000	0,04	0,01	0,04
PL327	Platform - General cross-section	S 235	NC8	1249,990	0,03	0,03	0,03
PL328	Platform - General cross-section	S 235	NC8	2500,000	0,04	0,01	0,04
PL329	Platform - General cross-section	S 235	NC8	1250,010	0,03	0,03	0,03
PL330	Platform - General cross-section	S 235	NC8	1562,500	0,04	0,03	0,04
PL331	Platform - General cross-section	S 235	NC8	1249,990	0,03	0,03	0,03
PL332	Platform - General cross-section	S 235	NC8	1249,990	0,04	0,04	0,04
PL333	Platform - General cross-section	S 235	NC8	1250,010	0,03	0,03	0,03
PL334	Platform - General cross-section	S 235	NC8	1250,010	0,04	0,04	0,04
PL335	Platform - General cross-section	S 235	NC8	1250,010	0,03	0,03	0,03
PL336	Platform - General cross-section	S 235	NC8	1250,010	0,04	0,04	0,04
PL337	Platform - General cross-section	S 235	NC8	1250,010	0,04	0,04	0,04
PL338	Platform - General cross-section	S 235	NC8	1250,010	0,04	0,04	0,04
PL339	Platform - General cross-section	S 235	NC8	937,500	0,03	0,03	0,03
PL340	Platform - General cross-section	S 235	NC8	1093,750	0,04	0,04	0,04
C227	TOPUKLUK - C	S 235	NC7	1249,990	0,13	0,01	0,13
C228	TOPUKLUK - C	S 235	NC8	1250,010	0,06	0,01	0,06
C229	TOPUKLUK - C	S 235	NC8	1249,990	0,12	0,01	0,12
C230	TOPUKLUK - C	S 235	NC8	1250,010	0,11	0,01	0,11
C231	TOPUKLUK - C	S 235	NC8	1249,990	0,06	0,01	0,06
C232	TOPUKLUK - C	S 235	NC8	1250,010	0,06	0,01	0,06
C233	TOPUKLUK - C	S 235	NC8	1249,990	0,11	0,01	0,11
C234	TOPUKLUK - C	S 235	NC8	1250,010	0,11	0,01	0,11
C235	TOPUKLUK - C	S 235	NC8	1249,990	0,06	0,01	0,06
C236	TOPUKLUK - C	S 235	NC7	1249,990	0,11	0,01	0,11
CP176	DIYAGONAL - CHS	S 235	NC8	0,000	0,12	0,12	0,00
CP177	DIYAGONAL - CHS	S 235	NC8	0,000	0,14	0,14	0,00
CP178	DIYAGONAL - CHS	S 235	NC8	0,000	0,14	0,14	0,00
CP179	DIYAGONAL - CHS	S 235	NC8	0,000	0,14	0,14	0,00
CP180	DIYAGONAL - CHS	S 235	NC8	0,000	0,14	0,14	0,00
CP181	DIYAGONAL - CHS	S 235	NC8	0,000	0,12	0,12	0,00
B1366	DİKME - CFCHS48.3X3	S 235	NC8	2000,000	0,32	0,32	0,00
B1367	DİKME - CFCHS48.3X3	S 235	NC8	110,000	0,26	0,26	0,00
B1368	DİKME - CFCHS48.3X3	S 235	NC8	2000,000	0,37	0,37	0,00
B1369	DİKME - CFCHS48.3X3	S 235	NC8	110,000	0,32	0,32	0,00
B1370	DİKME - CFCHS48.3X3	S 235	NC8	2000,000	0,43	0,43	0,00
B1371	DİKME - CFCHS48.3X3	S 235	NC8	110,000	0,36	0,36	0,00
B1372	DİKME - CFCHS48.3X3	S 235	NC8	2000,000	0,43	0,43	0,00
B1373	DİKME - CFCHS48.3X3	S 235	NC8	110,000	0,38	0,38	0,00
B1374	DİKME - CFCHS48.3X3	S 235	NC8	2000,000	0,47	0,47	0,00
B1375	DİKME - CFCHS48.3X3	S 235	NC8	110,000	0,39	0,39	0,00
B1376	DİKME - CFCHS48.3X3	S 235	NC8	2000,000	0,45	0,45	0,00
B1377	DİKME - CFCHS48.3X3	S 235	NC8	110,000	0,40	0,40	0,00
B1378	DİKME - CFCHS48.3X3	S 235	NC8	2000,000	0,47	0,47	0,00
B1379	DİKME - CFCHS48.3X3	S 235	NC8	110,000	0,39	0,39	0,00
B1380	DİKME - CFCHS48.3X3	S 235	NC8	2000,000	0,43	0,43	0,00
B1381	DİKME - CFCHS48.3X3	S 235	NC8	110,000	0,38	0,38	0,00
B1382	ALT_PROFIL - RHS	S 235	NC8	0,000	0,15	0,12	0,15
B1383	ALT_PROFIL - RHS	S 235	NC8	500,000	0,20	0,08	0,20
B1384	ALT_PROFIL - RHS	S 235	NC8	500,000	0,25	0,09	0,25
B1385	ALT_PROFIL - RHS	S 235	NC8	500,000	0,24	0,10	0,24
B1386	ALT_PROFIL - RHS	S 235	NC8	0,000	0,25	0,22	0,25
B1387	ALT_PROFIL - RHS	S 235	NC8	500,000	0,21	0,09	0,21
B1388	ALT_PROFIL - RHS	S 235	NC8	500,000	0,25	0,10	0,25
B1389	ALT_PROFIL - RHS	S 235	NC8	500,000	0,24	0,10	0,24
B1390	DİKME - CFCHS48.3X3	S 235	NC8	2000,000	0,43	0,43	0,00
B1391	DİKME - CFCHS48.3X3	S 235	NC8	110,000	0,36	0,36	0,00
B1392	ALT_PROFIL - RHS	S 235	NC8	500,000	0,24	0,09	0,24

Member	css	mat	Case	dx [mm]	un.check [-]	sec.check [-]	stab.check [-]
B1393	DİKME - CFCHS48.3X3	S 235	NC8	2000,000	0,37	0,37	0,00
B1394	DİKME - CFCHS48.3X3	S 235	NC8	110,000	0,32	0,32	0,00
B1395	ALT_PROFIL - RHS	S 235	NC8	500,000	0,20	0,08	0,20
B1396	DİKME - CFCHS48.3X3	S 235	NC8	2000,000	0,32	0,32	0,00
B1397	DİKME - CFCHS48.3X3	S 235	NC8	110,000	0,26	0,26	0,00
B1398	ALT_PROFIL - RHS	S 235	NC8	0,000	0,15	0,12	0,15
B1399	ÜST_PROFIL - RHS	S 235	NC8	700,000	0,07	0,06	0,07
B1400	ÜST_PROFIL - RHS	S 235	NC8	700,000	0,10	0,09	0,10
B1401	ÜST_PROFIL - RHS	S 235	NC8	700,000	0,11	0,10	0,11
B1402	ÜST_PROFIL - RHS	S 235	NC8	700,000	0,11	0,10	0,11
B1403	ÜST_PROFIL - RHS	S 235	NC8	700,000	0,11	0,10	0,11
B1404	ÜST_PROFIL - RHS	S 235	NC8	700,000	0,12	0,11	0,12
B1405	ÜST_PROFIL - RHS	S 235	NC8	700,000	0,11	0,10	0,11
B1406	ÜST_PROFIL - RHS	S 235	NC8	700,000	0,11	0,10	0,11
B1407	ÜST_PROFIL - RHS	S 235	NC8	700,000	0,11	0,10	0,11
B1408	ÜST_PROFIL - RHS	S 235	NC8	700,000	0,10	0,09	0,10
B1409	ÜST_PROFIL - RHS	S 235	NC8	700,000	0,07	0,06	0,07
B1410	YATAY - CHS	S 235	NC8	1249,990	0,08	0,08	0,00
B1411	YATAY - CHS	S 235	NC8	1249,990	0,08	0,08	0,00
B1412	YATAY - CHS	S 235	NC8	1249,990	0,08	0,08	0,00
B1413	YATAY - CHS	S 235	NC8	1249,990	0,08	0,08	0,00
B1414	YATAY - CHS	S 235	NC8	1249,990	0,08	0,08	0,00
B1415	YATAY - CHS	S 235	NC8	1249,990	0,08	0,08	0,00
B1416	YATAY - CHS	S 235	NC8	1249,990	0,08	0,08	0,00
B1417	YATAY - CHS	S 235	NC8	1249,990	0,08	0,08	0,00
B1418	YATAY - CHS	S 235	NC8	1249,990	0,08	0,08	0,00
B1419	YATAY - CHS	S 235	NC8	1249,990	0,08	0,08	0,00
B1420	YATAY - CHS	S 235	NC8	1249,990	0,08	0,08	0,00
B1421	YATAY - CHS	S 235	NC8	1249,990	0,08	0,08	0,00
B1422	YATAY - CHS	S 235	NC8	1249,990	0,08	0,08	0,00
B1423	YATAY - CHS	S 235	NC8	1249,990	0,08	0,08	0,00
B1424	YATAY - CHS	S 235	NC8	1249,990	0,08	0,08	0,00
B1425	YATAY - CHS	S 235	NC8	1249,990	0,08	0,08	0,00
B1426	YATAY - CHS	S 235	NC8	1249,990	0,08	0,08	0,00
B1427	YATAY - CHS	S 235	NC8	1249,990	0,08	0,08	0,00
B1428	YATAY - CHS	S 235	NC8	1249,990	0,08	0,08	0,00
B1429	YATAY - CHS	S 235	NC8	1249,990	0,08	0,08	0,00
PL341	Platform - General cross-section	S 235	NC8	1250,010	0,02	0,02	0,02
PL342	Platform - General cross-section	S 235	NC8	1093,750	0,03	0,03	0,03
PL343	Platform - General cross-section	S 235	NC7	1249,990	0,02	0,02	0,02
PL344	Platform - General cross-section	S 235	NC8	1250,010	0,03	0,03	0,03
PL345	Platform - General cross-section	S 235	NC8	1249,990	0,02	0,02	0,02
PL346	Platform - General cross-section	S 235	NC8	2500,000	0,03	0,01	0,03
PL347	Platform - General cross-section	S 235	NC8	1250,010	0,02	0,02	0,02
PL348	Platform - General cross-section	S 235	NC8	2500,000	0,03	0,01	0,03
PL349	Platform - General cross-section	S 235	NC8	2500,000	0,02	0,00	0,02
PL350	Platform - General cross-section	S 235	NC8	2500,000	0,04	0,01	0,04
PL351	Platform - General cross-section	S 235	NC10	1249,990	0,02	0,02	0,02
PL352	Platform - General cross-section	S 235	NC8	1250,010	0,04	0,03	0,04
PL353	Platform - General cross-section	S 235	NC8	1249,990	0,02	0,02	0,02
PL354	Platform - General cross-section	S 235	NC8	1249,990	0,03	0,03	0,03
PL355	Platform - General cross-section	S 235	NC3	1250,010	0,02	0,02	0,02
PL356	Platform - General cross-section	S 235	NC8	1250,010	0,03	0,03	0,03
PL357	Platform - General cross-section	S 235	NC7	2500,000	0,02	0,00	0,02
PL358	Platform - General cross-section	S 235	NC8	1249,990	0,03	0,03	0,03
PL359	Platform - General cross-section	S 235	NC8	1249,990	0,02	0,02	0,02
PL360	Platform - General cross-section	S 235	NC8	1406,250	0,03	0,03	0,03
C237	TOPUKLUK - C	S 235	NC8	1250,010	0,21	0,01	0,21
C238	TOPUKLUK - C	S 235	NC8	1250,010	0,07	0,01	0,07
C239	TOPUKLUK - C	S 235	NC8	1250,010	0,06	0,01	0,06
C240	TOPUKLUK - C	S 235	NC8	1249,990	0,06	0,01	0,06
C241	TOPUKLUK - C	S 235	NC8	1249,990	0,14	0,01	0,14
C242	TOPUKLUK - C	S 235	NC8	1249,990	0,14	0,01	0,14
C243	TOPUKLUK - C	S 235	NC8	1250,010	0,06	0,01	0,06
C244	TOPUKLUK - C	S 235	NC8	1249,990	0,07	0,01	0,07
C245	TOPUKLUK - C	S 235	NC8	1249,990	0,07	0,01	0,07
C246	TOPUKLUK - C	S 235	NC8	1249,990	0,20	0,01	0,20
CP182	DIYAGONAL - CHS	S 235	NC8	2957,431	0,09	0,09	0,00
CP183	DIYAGONAL - CHS	S 235	NC8	2957,431	0,09	0,09	0,00
CP184	DIYAGONAL - CHS	S 235	NC8	2957,431	0,10	0,10	0,00
CP185	DIYAGONAL - CHS	S 235	NC8	2957,431	0,10	0,10	0,00
CP186	DIYAGONAL - CHS	S 235	NC8	2957,431	0,09	0,09	0,00
CP187	DIYAGONAL - CHS	S 235	NC8	2957,431	0,09	0,09	0,00
B1430	DİKME - CFCHS48.3X3	S 235	NC8	110,000	0,33	0,33	0,00
B1431	DİKME - CFCHS48.3X3	S 235	NC8	2000,000	0,29	0,29	0,00
B1432	DİKME - CFCHS48.3X3	S 235	NC8	110,000	0,46	0,46	0,00

Member	css	mat	Case	dx [mm]	un.check [-]	sec.check [-]	stab.check [-]
B1433	DİKME - CFCHS48.3X3	S 235	NC8	0,000	0,37	0,37	0,00
B1434	DİKME - CFCHS48.3X3	S 235	NC8	110,000	0,43	0,43	0,00
B1435	DİKME - CFCHS48.3X3	S 235	NC8	0,000	0,40	0,40	0,00
B1436	DİKME - CFCHS48.3X3	S 235	NC8	110,000	0,46	0,46	0,00
B1437	DİKME - CFCHS48.3X3	S 235	NC8	0,000	0,42	0,42	0,00
B1438	DİKME - CFCHS48.3X3	S 235	NC8	110,000	0,48	0,48	0,00
B1439	DİKME - CFCHS48.3X3	S 235	NC8	0,000	0,43	0,43	0,00
B1440	DİKME - CFCHS48.3X3	S 235	NC8	110,000	0,56	0,56	0,00
B1441	DİKME - CFCHS48.3X3	S 235	NC8	0,000	0,44	0,44	0,00
B1442	DİKME - CFCHS48.3X3	S 235	NC8	110,000	0,48	0,48	0,00
B1443	DİKME - CFCHS48.3X3	S 235	NC8	0,000	0,43	0,43	0,00
B1444	DİKME - CFCHS48.3X3	S 235	NC8	110,000	0,46	0,46	0,00
B1445	DİKME - CFCHS48.3X3	S 235	NC8	0,000	0,42	0,42	0,00
B1446	ALT_PROFIL - RHS	S 235	NC8	200,000	0,18	0,08	0,18
B1447	ALT_PROFIL - RHS	S 235	NC8	200,000	0,21	0,12	0,21
B1448	ALT_PROFIL - RHS	S 235	NC8	200,000	0,21	0,13	0,21
B1449	ALT_PROFIL - RHS	S 235	NC8	200,000	0,21	0,13	0,21
B1450	ALT_PROFIL - RHS	S 235	NC8	200,000	0,21	0,14	0,21
B1451	ALT_PROFIL - RHS	S 235	NC8	200,000	0,20	0,13	0,20
B1452	ALT_PROFIL - RHS	S 235	NC8	200,000	0,21	0,14	0,21
B1453	ALT_PROFIL - RHS	S 235	NC8	200,000	0,21	0,13	0,21
B1454	DİKME - CFCHS48.3X3	S 235	NC8	110,000	0,43	0,43	0,00
B1455	DİKME - CFCHS48.3X3	S 235	NC8	0,000	0,40	0,40	0,00
B1456	ALT_PROFIL - RHS	S 235	NC8	200,000	0,21	0,13	0,21
B1457	DİKME - CFCHS48.3X3	S 235	NC8	110,000	0,46	0,46	0,00
B1458	DİKME - CFCHS48.3X3	S 235	NC8	0,000	0,37	0,37	0,00
B1459	ALT_PROFIL - RHS	S 235	NC8	200,000	0,21	0,12	0,21
B1460	DİKME - CFCHS48.3X3	S 235	NC8	110,000	0,33	0,33	0,00
B1461	DİKME - CFCHS48.3X3	S 235	NC8	2000,000	0,28	0,28	0,00
B1462	ALT_PROFIL - RHS	S 235	NC8	200,000	0,18	0,08	0,18
B1463	ÜST_PROFIL - RHS	S 235	NC8	700,000	0,12	0,09	0,12
B1464	ÜST_PROFIL - RHS	S 235	NC8	0,000	0,14	0,12	0,14
B1465	ÜST_PROFIL - RHS	S 235	NC8	700,000	0,12	0,10	0,12
B1466	ÜST_PROFIL - RHS	S 235	NC8	700,000	0,12	0,11	0,12
B1467	ÜST_PROFIL - RHS	S 235	NC8	700,000	0,13	0,11	0,13
B1468	ÜST_PROFIL - RHS	S 235	NC8	0,000	0,17	0,15	0,17
B1469	ÜST_PROFIL - RHS	S 235	NC8	700,000	0,13	0,11	0,13
B1470	ÜST_PROFIL - RHS	S 235	NC8	700,000	0,12	0,11	0,12
B1471	ÜST_PROFIL - RHS	S 235	NC8	700,000	0,12	0,10	0,12
B1472	ÜST_PROFIL - RHS	S 235	NC8	0,000	0,14	0,12	0,14
B1473	ÜST_PROFIL - RHS	S 235	NC8	700,000	0,12	0,09	0,12
B1474	YATAY - CHS	S 235	NC8	1249,990	0,08	0,08	0,00
B1475	YATAY - CHS	S 235	NC8	1249,990	0,08	0,08	0,00
B1476	YATAY - CHS	S 235	NC8	1249,990	0,08	0,08	0,00
B1477	YATAY - CHS	S 235	NC8	1249,990	0,08	0,08	0,00
B1478	YATAY - CHS	S 235	NC8	1249,990	0,08	0,08	0,00
B1479	YATAY - CHS	S 235	NC8	1249,990	0,08	0,08	0,00
B1480	YATAY - CHS	S 235	NC8	1249,990	0,08	0,08	0,00
B1481	YATAY - CHS	S 235	NC8	1249,990	0,08	0,08	0,00
B1482	YATAY - CHS	S 235	NC8	1249,990	0,08	0,08	0,00
B1483	YATAY - CHS	S 235	NC8	1249,990	0,08	0,08	0,00
B1484	YATAY - CHS	S 235	NC8	1249,990	0,08	0,08	0,00
B1485	YATAY - CHS	S 235	NC8	1249,990	0,08	0,08	0,00
B1486	YATAY - CHS	S 235	NC8	1249,990	0,08	0,08	0,00
B1487	YATAY - CHS	S 235	NC8	1249,990	0,08	0,08	0,00
B1488	YATAY - CHS	S 235	NC8	1249,990	0,08	0,08	0,00
B1489	YATAY - CHS	S 235	NC8	1249,990	0,08	0,08	0,00
B1490	YATAY - CHS	S 235	NC8	1249,990	0,08	0,08	0,00
B1491	YATAY - CHS	S 235	NC8	1249,990	0,08	0,08	0,00
B1492	YATAY - CHS	S 235	NC8	1249,990	0,08	0,08	0,00
B1493	YATAY - CHS	S 235	NC8	1249,990	0,08	0,08	0,00
PL361	Platform - General cross-section	S 235	NC8	1562,500	0,03	0,03	0,03
PL362	Platform - General cross-section	S 235	NC8	2500,000	0,04	0,01	0,04
PL363	Platform - General cross-section	S 235	NC8	1249,990	0,04	0,04	0,04
PL364	Platform - General cross-section	S 235	NC8	2500,000	0,04	0,01	0,04
PL365	Platform - General cross-section	S 235	NC8	1249,990	0,03	0,03	0,03
PL366	Platform - General cross-section	S 235	NC8	2500,000	0,04	0,01	0,04
PL367	Platform - General cross-section	S 235	NC8	1249,990	0,03	0,03	0,03
PL368	Platform - General cross-section	S 235	NC8	2500,000	0,04	0,01	0,04
PL369	Platform - General cross-section	S 235	NC8	1250,010	0,03	0,03	0,03
PL370	Platform - General cross-section	S 235	NC8	1562,500	0,04	0,03	0,04
PL371	Platform - General cross-section	S 235	NC8	1249,990	0,03	0,03	0,03
PL372	Platform - General cross-section	S 235	NC8	1249,990	0,04	0,04	0,04
PL373	Platform - General cross-section	S 235	NC8	1250,010	0,03	0,03	0,03
PL374	Platform - General cross-section	S 235	NC8	1250,010	0,04	0,04	0,04
PL375	Platform - General cross-section	S 235	NC8	1250,010	0,03	0,03	0,03

Member	css	mat	Case	dx [mm]	un.check [-]	sec.check [-]	stab.check [-]
PL376	Platform - General cross-section	S 235	NC8	1250,010	0,04	0,04	0,04
PL377	Platform - General cross-section	S 235	NC8	1250,010	0,04	0,04	0,04
PL378	Platform - General cross-section	S 235	NC8	1250,010	0,04	0,04	0,04
PL379	Platform - General cross-section	S 235	NC8	937,500	0,03	0,03	0,03
PL380	Platform - General cross-section	S 235	NC8	1249,990	0,04	0,04	0,04
C247	TOPUKLUK - C	S 235	NC7	1249,990	0,14	0,01	0,14
C248	TOPUKLUK - C	S 235	NC8	1250,010	0,06	0,01	0,06
C249	TOPUKLUK - C	S 235	NC8	1249,990	0,11	0,01	0,11
C250	TOPUKLUK - C	S 235	NC8	1250,010	0,11	0,01	0,11
C251	TOPUKLUK - C	S 235	NC8	1249,990	0,06	0,01	0,06
C252	TOPUKLUK - C	S 235	NC8	1250,010	0,06	0,01	0,06
C253	TOPUKLUK - C	S 235	NC8	1249,990	0,11	0,01	0,11
C254	TOPUKLUK - C	S 235	NC8	1250,010	0,11	0,01	0,11
C255	TOPUKLUK - C	S 235	NC8	1249,990	0,06	0,01	0,06
C256	TOPUKLUK - C	S 235	NC7	1249,990	0,12	0,01	0,12
CP188	DIYAGONAL - CHS	S 235	NC8	0,000	0,12	0,12	0,00
CP189	DIYAGONAL - CHS	S 235	NC8	0,000	0,13	0,13	0,00
CP190	DIYAGONAL - CHS	S 235	NC8	0,000	0,14	0,14	0,00
CP191	DIYAGONAL - CHS	S 235	NC8	0,000	0,14	0,14	0,00
CP192	DIYAGONAL - CHS	S 235	NC8	0,000	0,13	0,13	0,00
CP193	DIYAGONAL - CHS	S 235	NC8	0,000	0,12	0,12	0,00
B1494	DİKME - CFCHS48.3X3	S 235	NC8	2000,000	0,31	0,31	0,00
B1495	DİKME - CFCHS48.3X3	S 235	NC8	110,000	0,25	0,25	0,00
B1496	DİKME - CFCHS48.3X3	S 235	NC8	2000,000	0,37	0,37	0,00
B1497	DİKME - CFCHS48.3X3	S 235	NC8	110,000	0,32	0,32	0,00
B1498	DİKME - CFCHS48.3X3	S 235	NC8	2000,000	0,42	0,42	0,00
B1499	DİKME - CFCHS48.3X3	S 235	NC8	110,000	0,35	0,35	0,00
B1500	DİKME - CFCHS48.3X3	S 235	NC8	2000,000	0,42	0,42	0,00
B1501	DİKME - CFCHS48.3X3	S 235	NC8	110,000	0,37	0,37	0,00
B1502	DİKME - CFCHS48.3X3	S 235	NC8	2000,000	0,46	0,46	0,00
B1503	DİKME - CFCHS48.3X3	S 235	NC8	110,000	0,38	0,38	0,00
B1504	DİKME - CFCHS48.3X3	S 235	NC8	2000,000	0,44	0,44	0,00
B1505	DİKME - CFCHS48.3X3	S 235	NC8	110,000	0,39	0,39	0,00
B1506	DİKME - CFCHS48.3X3	S 235	NC8	2000,000	0,46	0,46	0,00
B1507	DİKME - CFCHS48.3X3	S 235	NC8	110,000	0,38	0,38	0,00
B1508	DİKME - CFCHS48.3X3	S 235	NC8	2000,000	0,42	0,42	0,00
B1509	DİKME - CFCHS48.3X3	S 235	NC8	110,000	0,37	0,37	0,00
B1510	ALT_PROFIL - RHS	S 235	NC8	0,000	0,14	0,12	0,14
B1511	ALT_PROFIL - RHS	S 235	NC8	500,000	0,20	0,08	0,20
B1512	ALT_PROFIL - RHS	S 235	NC8	500,000	0,24	0,09	0,24
B1513	ALT_PROFIL - RHS	S 235	NC8	500,000	0,23	0,09	0,23
B1514	ALT_PROFIL - RHS	S 235	NC8	500,000	0,25	0,09	0,25
B1515	ALT_PROFIL - RHS	S 235	NC8	500,000	0,21	0,09	0,21
B1516	ALT_PROFIL - RHS	S 235	NC8	500,000	0,25	0,09	0,25
B1517	ALT_PROFIL - RHS	S 235	NC8	500,000	0,23	0,09	0,23
B1518	DİKME - CFCHS48.3X3	S 235	NC8	2000,000	0,42	0,42	0,00
B1519	DİKME - CFCHS48.3X3	S 235	NC8	110,000	0,35	0,35	0,00
B1520	ALT_PROFIL - RHS	S 235	NC8	500,000	0,24	0,09	0,24
B1521	DİKME - CFCHS48.3X3	S 235	NC8	2000,000	0,37	0,37	0,00
B1522	DİKME - CFCHS48.3X3	S 235	NC8	110,000	0,32	0,32	0,00
B1523	ALT_PROFIL - RHS	S 235	NC8	500,000	0,20	0,08	0,20
B1524	DİKME - CFCHS48.3X3	S 235	NC8	2000,000	0,31	0,31	0,00
B1525	DİKME - CFCHS48.3X3	S 235	NC8	110,000	0,25	0,25	0,00
B1526	ALT_PROFIL - RHS	S 235	NC8	0,000	0,14	0,12	0,14
B1527	ÜST_PROFIL - RHS	S 235	NC8	700,000	0,07	0,06	0,07
B1528	ÜST_PROFIL - RHS	S 235	NC8	700,000	0,10	0,09	0,10
B1529	ÜST_PROFIL - RHS	S 235	NC8	700,000	0,10	0,10	0,10
B1530	ÜST_PROFIL - RHS	S 235	NC8	700,000	0,11	0,10	0,11
B1531	ÜST_PROFIL - RHS	S 235	NC8	700,000	0,11	0,10	0,11
B1532	ÜST_PROFIL - RHS	S 235	NC8	700,000	0,11	0,11	0,11
B1533	ÜST_PROFIL - RHS	S 235	NC8	700,000	0,11	0,10	0,11
B1534	ÜST_PROFIL - RHS	S 235	NC8	700,000	0,11	0,10	0,11
B1535	ÜST_PROFIL - RHS	S 235	NC8	700,000	0,10	0,10	0,10
B1536	ÜST_PROFIL - RHS	S 235	NC8	700,000	0,10	0,09	0,10
B1537	ÜST_PROFIL - RHS	S 235	NC8	700,000	0,07	0,06	0,07
B1538	YATAY - CHS	S 235	NC8	1249,990	0,08	0,08	0,00
B1539	YATAY - CHS	S 235	NC8	1249,990	0,08	0,08	0,00
B1540	YATAY - CHS	S 235	NC8	1249,990	0,08	0,08	0,00
B1541	YATAY - CHS	S 235	NC8	1249,990	0,08	0,08	0,00
B1542	YATAY - CHS	S 235	NC8	1249,990	0,08	0,08	0,00
B1543	YATAY - CHS	S 235	NC8	1249,990	0,08	0,08	0,00
B1544	YATAY - CHS	S 235	NC8	1249,990	0,08	0,08	0,00
B1545	YATAY - CHS	S 235	NC8	1249,990	0,08	0,08	0,00
B1546	YATAY - CHS	S 235	NC8	1249,990	0,08	0,08	0,00
B1547	YATAY - CHS	S 235	NC8	1249,990	0,08	0,08	0,00
B1548	YATAY - CHS	S 235	NC8	1249,990	0,08	0,08	0,00

Member	css	mat	Case	dx [mm]	un.check [-]	sec.check [-]	stab.check [-]
B1549	YATAY - CHS	S 235	NC8	1249,990	0,08	0,08	0,00
B1550	YATAY - CHS	S 235	NC8	1249,990	0,08	0,08	0,00
B1551	YATAY - CHS	S 235	NC8	1249,990	0,08	0,08	0,00
B1552	YATAY - CHS	S 235	NC8	1249,990	0,08	0,08	0,00
B1553	YATAY - CHS	S 235	NC8	1249,990	0,08	0,08	0,00
B1554	YATAY - CHS	S 235	NC8	1249,990	0,08	0,08	0,00
B1555	YATAY - CHS	S 235	NC8	1249,990	0,08	0,08	0,00
B1556	YATAY - CHS	S 235	NC8	1249,990	0,08	0,08	0,00
B1557	YATAY - CHS	S 235	NC8	1249,990	0,08	0,08	0,00
PL381	Platform - General cross-section	S 235	NC8	1250,010	0,02	0,02	0,02
PL382	Platform - General cross-section	S 235	NC8	1093,750	0,03	0,03	0,03
PL383	Platform - General cross-section	S 235	NC7	1249,990	0,02	0,02	0,02
PL384	Platform - General cross-section	S 235	NC8	1250,010	0,03	0,03	0,03
PL385	Platform - General cross-section	S 235	NC8	1249,990	0,02	0,02	0,02
PL386	Platform - General cross-section	S 235	NC8	2500,000	0,03	0,01	0,03
PL387	Platform - General cross-section	S 235	NC8	1250,010	0,02	0,02	0,02
PL388	Platform - General cross-section	S 235	NC8	2500,000	0,03	0,01	0,03
PL389	Platform - General cross-section	S 235	NC7	2500,000	0,02	0,00	0,02
PL390	Platform - General cross-section	S 235	NC8	2500,000	0,04	0,01	0,04
PL391	Platform - General cross-section	S 235	NC8	1249,990	0,02	0,02	0,02
PL392	Platform - General cross-section	S 235	NC8	1250,010	0,04	0,03	0,04
PL393	Platform - General cross-section	S 235	NC8	1249,990	0,02	0,02	0,02
PL394	Platform - General cross-section	S 235	NC8	1249,990	0,03	0,03	0,03
PL395	Platform - General cross-section	S 235	NC3	1250,010	0,02	0,02	0,02
PL396	Platform - General cross-section	S 235	NC8	1250,010	0,03	0,03	0,03
PL397	Platform - General cross-section	S 235	NC7	2500,000	0,02	0,00	0,02
PL398	Platform - General cross-section	S 235	NC8	1249,990	0,03	0,03	0,03
PL399	Platform - General cross-section	S 235	NC8	1249,990	0,02	0,02	0,02
PL400	Platform - General cross-section	S 235	NC8	1406,250	0,03	0,03	0,03
C257	TOPUKLUK - C	S 235	NC8	1250,010	0,22	0,01	0,22
C258	TOPUKLUK - C	S 235	NC8	1250,010	0,07	0,01	0,07
C259	TOPUKLUK - C	S 235	NC8	1250,010	0,06	0,01	0,06
C260	TOPUKLUK - C	S 235	NC8	1249,990	0,06	0,01	0,06
C261	TOPUKLUK - C	S 235	NC8	1249,990	0,14	0,01	0,14
C262	TOPUKLUK - C	S 235	NC8	1249,990	0,14	0,01	0,14
C263	TOPUKLUK - C	S 235	NC8	1250,010	0,06	0,01	0,06
C264	TOPUKLUK - C	S 235	NC8	1249,990	0,06	0,01	0,06
C265	TOPUKLUK - C	S 235	NC8	1249,990	0,07	0,01	0,07
C266	TOPUKLUK - C	S 235	NC8	1249,990	0,21	0,01	0,21
CP194	DIYAGONAL - CHS	S 235	NC8	2957,431	0,09	0,09	0,00
CP195	DIYAGONAL - CHS	S 235	NC8	2957,431	0,09	0,09	0,00
CP196	DIYAGONAL - CHS	S 235	NC8	2957,431	0,10	0,10	0,00
CP197	DIYAGONAL - CHS	S 235	NC8	2957,431	0,10	0,10	0,00
CP198	DIYAGONAL - CHS	S 235	NC8	2957,431	0,09	0,09	0,00
CP199	DIYAGONAL - CHS	S 235	NC8	2957,431	0,09	0,09	0,00
B1558	DİKME - CFCHS48.3X3	S 235	NC8	110,000	0,32	0,32	0,00
B1559	DİKME - CFCHS48.3X3	S 235	NC8	2000,000	0,28	0,28	0,00
B1560	DİKME - CFCHS48.3X3	S 235	NC8	110,000	0,45	0,45	0,00
B1561	DİKME - CFCHS48.3X3	S 235	NC8	0,000	0,37	0,37	0,00
B1562	DİKME - CFCHS48.3X3	S 235	NC8	110,000	0,43	0,43	0,00
B1563	DİKME - CFCHS48.3X3	S 235	NC8	0,000	0,39	0,39	0,00
B1564	DİKME - CFCHS48.3X3	S 235	NC8	110,000	0,45	0,45	0,00
B1565	DİKME - CFCHS48.3X3	S 235	NC8	0,000	0,41	0,41	0,00
B1566	DİKME - CFCHS48.3X3	S 235	NC8	110,000	0,47	0,47	0,00
B1567	DİKME - CFCHS48.3X3	S 235	NC8	0,000	0,42	0,42	0,00
B1568	DİKME - CFCHS48.3X3	S 235	NC8	110,000	0,55	0,55	0,00
B1569	DİKME - CFCHS48.3X3	S 235	NC8	0,000	0,43	0,43	0,00
B1570	DİKME - CFCHS48.3X3	S 235	NC8	110,000	0,47	0,47	0,00
B1571	DİKME - CFCHS48.3X3	S 235	NC8	0,000	0,42	0,42	0,00
B1572	DİKME - CFCHS48.3X3	S 235	NC8	110,000	0,45	0,45	0,00
B1573	DİKME - CFCHS48.3X3	S 235	NC8	0,000	0,41	0,41	0,00
B1574	ALT_PROFIL - RHS	S 235	NC8	200,000	0,18	0,08	0,18
B1575	ALT_PROFIL - RHS	S 235	NC8	200,000	0,21	0,12	0,21
B1576	ALT_PROFIL - RHS	S 235	NC8	200,000	0,21	0,13	0,21
B1577	ALT_PROFIL - RHS	S 235	NC8	200,000	0,20	0,13	0,20
B1578	ALT_PROFIL - RHS	S 235	NC8	700,000	0,20	0,20	0,20
B1579	ALT_PROFIL - RHS	S 235	NC8	200,000	0,20	0,13	0,20
B1580	ALT_PROFIL - RHS	S 235	NC8	200,000	0,21	0,14	0,21
B1581	ALT_PROFIL - RHS	S 235	NC8	200,000	0,21	0,13	0,21
B1582	DİKME - CFCHS48.3X3	S 235	NC8	110,000	0,43	0,43	0,00
B1583	DİKME - CFCHS48.3X3	S 235	NC8	0,000	0,39	0,39	0,00
B1584	ALT_PROFIL - RHS	S 235	NC8	200,000	0,21	0,13	0,21
B1585	DİKME - CFCHS48.3X3	S 235	NC8	110,000	0,45	0,45	0,00
B1586	DİKME - CFCHS48.3X3	S 235	NC8	0,000	0,37	0,37	0,00
B1587	ALT_PROFIL - RHS	S 235	NC8	200,000	0,21	0,12	0,21
B1588	DİKME - CFCHS48.3X3	S 235	NC8	110,000	0,32	0,32	0,00

Member	css	mat	Case	dx [mm]	un.check [-]	sec.check [-]	stab.check [-]
B1589	DİKME - CFCHS48.3X3	S 235	NC8	2000,000	0,28	0,28	0,00
B1590	ALT_PROFIL - RHS	S 235	NC8	200,000	0,18	0,08	0,18
B1591	ÜST_PROFIL - RHS	S 235	NC8	700,000	0,12	0,09	0,12
B1592	ÜST_PROFIL - RHS	S 235	NC8	0,000	0,14	0,12	0,14
B1593	ÜST_PROFIL - RHS	S 235	NC8	700,000	0,12	0,10	0,12
B1594	ÜST_PROFIL - RHS	S 235	NC8	700,000	0,12	0,11	0,12
B1595	ÜST_PROFIL - RHS	S 235	NC8	700,000	0,13	0,11	0,13
B1596	ÜST_PROFIL - RHS	S 235	NC8	0,000	0,17	0,15	0,17
B1597	ÜST_PROFIL - RHS	S 235	NC8	700,000	0,13	0,11	0,13
B1598	ÜST_PROFIL - RHS	S 235	NC8	700,000	0,12	0,11	0,12
B1599	ÜST_PROFIL - RHS	S 235	NC8	700,000	0,12	0,10	0,12
B1600	ÜST_PROFIL - RHS	S 235	NC8	0,000	0,14	0,12	0,14
B1601	ÜST_PROFIL - RHS	S 235	NC8	700,000	0,12	0,09	0,12
B1602	YATAY - CHS	S 235	NC8	1249,990	0,08	0,08	0,00
B1603	YATAY - CHS	S 235	NC8	1249,990	0,08	0,08	0,00
B1604	YATAY - CHS	S 235	NC8	1249,990	0,08	0,08	0,00
B1605	YATAY - CHS	S 235	NC8	1249,990	0,08	0,08	0,00
B1606	YATAY - CHS	S 235	NC8	1249,990	0,08	0,08	0,00
B1607	YATAY - CHS	S 235	NC8	1249,990	0,08	0,08	0,00
B1608	YATAY - CHS	S 235	NC8	1249,990	0,08	0,08	0,00
B1609	YATAY - CHS	S 235	NC8	1249,990	0,08	0,08	0,00
B1610	YATAY - CHS	S 235	NC8	1249,990	0,08	0,08	0,00
B1611	YATAY - CHS	S 235	NC8	1249,990	0,08	0,08	0,00
B1612	YATAY - CHS	S 235	NC8	1249,990	0,08	0,08	0,00
B1613	YATAY - CHS	S 235	NC8	1249,990	0,08	0,08	0,00
B1614	YATAY - CHS	S 235	NC8	1249,990	0,08	0,08	0,00
B1615	YATAY - CHS	S 235	NC8	1249,990	0,08	0,08	0,00
B1616	YATAY - CHS	S 235	NC8	1249,990	0,08	0,08	0,00
B1617	YATAY - CHS	S 235	NC8	1249,990	0,08	0,08	0,00
B1618	YATAY - CHS	S 235	NC8	1249,990	0,08	0,08	0,00
B1619	YATAY - CHS	S 235	NC8	1249,990	0,08	0,08	0,00
B1620	YATAY - CHS	S 235	NC8	1249,990	0,08	0,08	0,00
B1621	YATAY - CHS	S 235	NC8	1249,990	0,08	0,08	0,00
PL401	Platform - General cross-section	S 235	NC8	1562,500	0,03	0,03	0,03
PL402	Platform - General cross-section	S 235	NC8	2500,000	0,04	0,01	0,04
PL403	Platform - General cross-section	S 235	NC8	1249,990	0,04	0,04	0,04
PL404	Platform - General cross-section	S 235	NC8	2500,000	0,04	0,01	0,04
PL405	Platform - General cross-section	S 235	NC8	1249,990	0,03	0,03	0,03
PL406	Platform - General cross-section	S 235	NC8	2500,000	0,04	0,01	0,04
PL407	Platform - General cross-section	S 235	NC8	1249,990	0,03	0,03	0,03
PL408	Platform - General cross-section	S 235	NC8	2500,000	0,04	0,01	0,04
PL409	Platform - General cross-section	S 235	NC8	1250,010	0,03	0,03	0,03
PL410	Platform - General cross-section	S 235	NC8	1562,500	0,04	0,03	0,04
PL411	Platform - General cross-section	S 235	NC8	1249,990	0,03	0,03	0,03
PL412	Platform - General cross-section	S 235	NC8	1249,990	0,04	0,04	0,04
PL413	Platform - General cross-section	S 235	NC8	1250,010	0,03	0,03	0,03
PL414	Platform - General cross-section	S 235	NC8	1250,010	0,04	0,04	0,04
PL415	Platform - General cross-section	S 235	NC8	1250,010	0,03	0,03	0,03
PL416	Platform - General cross-section	S 235	NC8	1250,010	0,04	0,04	0,04
PL417	Platform - General cross-section	S 235	NC8	1250,010	0,04	0,04	0,04
PL418	Platform - General cross-section	S 235	NC8	1250,010	0,04	0,04	0,04
PL419	Platform - General cross-section	S 235	NC8	937,500	0,03	0,03	0,03
PL420	Platform - General cross-section	S 235	NC8	1249,990	0,04	0,04	0,04
C267	TOPUKLUK - C	S 235	NC7	1249,990	0,14	0,01	0,14
C268	TOPUKLUK - C	S 235	NC8	1250,010	0,06	0,01	0,06
C269	TOPUKLUK - C	S 235	NC8	1249,990	0,11	0,01	0,11
C270	TOPUKLUK - C	S 235	NC8	1250,010	0,11	0,01	0,11
C271	TOPUKLUK - C	S 235	NC8	1249,990	0,06	0,01	0,06
C272	TOPUKLUK - C	S 235	NC8	1250,010	0,06	0,01	0,06
C273	TOPUKLUK - C	S 235	NC8	1249,990	0,11	0,01	0,11
C274	TOPUKLUK - C	S 235	NC8	1250,010	0,11	0,01	0,11
C275	TOPUKLUK - C	S 235	NC8	1249,990	0,06	0,01	0,06
C276	TOPUKLUK - C	S 235	NC4	1249,990	0,13	0,01	0,13
CP200	DIYAGONAL - CHS	S 235	NC8	0,000	0,11	0,11	0,00
CP201	DIYAGONAL - CHS	S 235	NC8	0,000	0,13	0,13	0,00
CP202	DIYAGONAL - CHS	S 235	NC8	0,000	0,14	0,14	0,00
CP203	DIYAGONAL - CHS	S 235	NC8	0,000	0,14	0,14	0,00
CP204	DIYAGONAL - CHS	S 235	NC8	0,000	0,13	0,13	0,00
CP205	DIYAGONAL - CHS	S 235	NC8	0,000	0,11	0,11	0,00
B1622	DİKME - CFCHS48.3X3	S 235	NC8	2000,000	0,30	0,30	0,00
B1623	DİKME - CFCHS48.3X3	S 235	NC8	110,000	0,24	0,24	0,00
B1624	DİKME - CFCHS48.3X3	S 235	NC8	2000,000	0,36	0,36	0,00
B1625	DİKME - CFCHS48.3X3	S 235	NC8	110,000	0,31	0,31	0,00
B1626	DİKME - CFCHS48.3X3	S 235	NC8	2000,000	0,41	0,41	0,00
B1627	DİKME - CFCHS48.3X3	S 235	NC8	110,000	0,34	0,34	0,00
B1628	DİKME - CFCHS48.3X3	S 235	NC8	2000,000	0,41	0,41	0,00

Member	css	mat	Case	dx [mm]	un.check [-]	sec.check [-]	stab.check [-]
B1629	DİKME - CFCHS48.3X3	S 235	NC8	110,000	0,36	0,36	0,00
B1630	DİKME - CFCHS48.3X3	S 235	NC8	2000,000	0,45	0,45	0,00
B1631	DİKME - CFCHS48.3X3	S 235	NC8	110,000	0,37	0,37	0,00
B1632	DİKME - CFCHS48.3X3	S 235	NC8	2000,000	0,43	0,43	0,00
B1633	DİKME - CFCHS48.3X3	S 235	NC8	110,000	0,38	0,38	0,00
B1634	DİKME - CFCHS48.3X3	S 235	NC8	2000,000	0,45	0,45	0,00
B1635	DİKME - CFCHS48.3X3	S 235	NC8	110,000	0,37	0,37	0,00
B1636	DİKME - CFCHS48.3X3	S 235	NC8	2000,000	0,41	0,41	0,00
B1637	DİKME - CFCHS48.3X3	S 235	NC8	110,000	0,36	0,36	0,00
B1638	ALT_PROFIL - RHS	S 235	NC8	0,000	0,14	0,11	0,14
B1639	ALT_PROFIL - RHS	S 235	NC8	500,000	0,20	0,08	0,20
B1640	ALT_PROFIL - RHS	S 235	NC8	500,000	0,24	0,09	0,24
B1641	ALT_PROFIL - RHS	S 235	NC8	500,000	0,23	0,09	0,23
B1642	ALT_PROFIL - RHS	S 235	NC8	500,000	0,24	0,09	0,24
B1643	ALT_PROFIL - RHS	S 235	NC8	500,000	0,21	0,08	0,21
B1644	ALT_PROFIL - RHS	S 235	NC8	500,000	0,24	0,09	0,24
B1645	ALT_PROFIL - RHS	S 235	NC8	500,000	0,23	0,09	0,23
B1646	DİKME - CFCHS48.3X3	S 235	NC8	2000,000	0,41	0,41	0,00
B1647	DİKME - CFCHS48.3X3	S 235	NC8	110,000	0,34	0,34	0,00
B1648	ALT_PROFIL - RHS	S 235	NC8	500,000	0,24	0,09	0,24
B1649	DİKME - CFCHS48.3X3	S 235	NC8	2000,000	0,36	0,36	0,00
B1650	DİKME - CFCHS48.3X3	S 235	NC8	110,000	0,31	0,31	0,00
B1651	ALT_PROFIL - RHS	S 235	NC8	500,000	0,20	0,08	0,20
B1652	DİKME - CFCHS48.3X3	S 235	NC8	2000,000	0,30	0,30	0,00
B1653	DİKME - CFCHS48.3X3	S 235	NC8	110,000	0,24	0,24	0,00
B1654	ALT_PROFIL - RHS	S 235	NC8	0,000	0,14	0,12	0,14
B1655	ÜST_PROFIL - RHS	S 235	NC8	700,000	0,07	0,06	0,07
B1656	ÜST_PROFIL - RHS	S 235	NC8	700,000	0,10	0,09	0,10
B1657	ÜST_PROFIL - RHS	S 235	NC8	700,000	0,10	0,10	0,10
B1658	ÜST_PROFIL - RHS	S 235	NC8	700,000	0,11	0,10	0,11
B1659	ÜST_PROFIL - RHS	S 235	NC8	700,000	0,11	0,10	0,11
B1660	ÜST_PROFIL - RHS	S 235	NC8	700,000	0,11	0,11	0,11
B1661	ÜST_PROFIL - RHS	S 235	NC8	700,000	0,11	0,10	0,11
B1662	ÜST_PROFIL - RHS	S 235	NC8	700,000	0,11	0,10	0,11
B1663	ÜST_PROFIL - RHS	S 235	NC8	700,000	0,10	0,10	0,10
B1664	ÜST_PROFIL - RHS	S 235	NC8	700,000	0,10	0,09	0,10
B1665	ÜST_PROFIL - RHS	S 235	NC8	700,000	0,07	0,06	0,07
B1666	YATAY - CHS	S 235	NC8	1249,990	0,08	0,08	0,00
B1667	YATAY - CHS	S 235	NC8	1249,990	0,08	0,08	0,00
B1668	YATAY - CHS	S 235	NC8	1249,990	0,08	0,08	0,00
B1669	YATAY - CHS	S 235	NC8	1249,990	0,08	0,08	0,00
B1670	YATAY - CHS	S 235	NC8	1249,990	0,08	0,08	0,00
B1671	YATAY - CHS	S 235	NC8	1249,990	0,08	0,08	0,00
B1672	YATAY - CHS	S 235	NC8	1249,990	0,08	0,08	0,00
B1673	YATAY - CHS	S 235	NC8	1249,990	0,08	0,08	0,00
B1674	YATAY - CHS	S 235	NC8	1249,990	0,08	0,08	0,00
B1675	YATAY - CHS	S 235	NC8	1250,010	0,08	0,08	0,00
B1676	YATAY - CHS	S 235	NC8	1249,990	0,08	0,08	0,00
B1677	YATAY - CHS	S 235	NC8	1249,990	0,08	0,08	0,00
B1678	YATAY - CHS	S 235	NC8	1249,990	0,08	0,08	0,00
B1679	YATAY - CHS	S 235	NC8	1249,990	0,08	0,08	0,00
B1680	YATAY - CHS	S 235	NC8	1249,990	0,08	0,08	0,00
B1681	YATAY - CHS	S 235	NC8	1249,990	0,08	0,08	0,00
B1682	YATAY - CHS	S 235	NC8	1249,990	0,08	0,08	0,00
B1683	YATAY - CHS	S 235	NC8	1249,990	0,08	0,08	0,00
B1684	YATAY - CHS	S 235	NC8	1249,990	0,08	0,08	0,00
B1685	YATAY - CHS	S 235	NC8	1249,990	0,08	0,08	0,00
PL421	Platform - General cross-section	S 235	NC8	1250,010	0,02	0,02	0,02
PL422	Platform - General cross-section	S 235	NC8	1093,750	0,03	0,03	0,03
PL423	Platform - General cross-section	S 235	NC7	1250,010	0,02	0,02	0,02
PL424	Platform - General cross-section	S 235	NC8	1250,010	0,03	0,03	0,03
PL425	Platform - General cross-section	S 235	NC8	1249,990	0,02	0,02	0,02
PL426	Platform - General cross-section	S 235	NC8	2500,000	0,03	0,01	0,03
PL427	Platform - General cross-section	S 235	NC8	1250,010	0,02	0,02	0,02
PL428	Platform - General cross-section	S 235	NC8	2500,000	0,03	0,01	0,03
PL429	Platform - General cross-section	S 235	NC7	2500,000	0,02	0,00	0,02
PL430	Platform - General cross-section	S 235	NC8	2500,000	0,04	0,01	0,04
PL431	Platform - General cross-section	S 235	NC8	1249,990	0,02	0,02	0,02
PL432	Platform - General cross-section	S 235	NC8	1250,010	0,04	0,03	0,04
PL433	Platform - General cross-section	S 235	NC7	1249,990	0,02	0,02	0,02
PL434	Platform - General cross-section	S 235	NC8	1249,990	0,03	0,03	0,03
PL435	Platform - General cross-section	S 235	NC3	1250,010	0,02	0,02	0,02
PL436	Platform - General cross-section	S 235	NC8	1250,010	0,03	0,03	0,03
PL437	Platform - General cross-section	S 235	NC7	2500,000	0,02	0,00	0,02
PL438	Platform - General cross-section	S 235	NC8	1249,990	0,03	0,03	0,03
PL439	Platform - General cross-section	S 235	NC8	1249,990	0,02	0,02	0,02

Member	css	mat	Case	dx [mm]	un.check [-]	sec.check [-]	stab.check [-]
PL440	Platform - General cross-section	S 235	NC8	1406,250	0,03	0,03	0,03
C277	TOPUKLUK - C	S 235	NC8	1250,010	0,22	0,02	0,22
C278	TOPUKLUK - C	S 235	NC8	1249,990	0,07	0,01	0,07
C279	TOPUKLUK - C	S 235	NC8	1250,010	0,06	0,01	0,06
C280	TOPUKLUK - C	S 235	NC8	1249,990	0,06	0,01	0,06
C281	TOPUKLUK - C	S 235	NC8	1249,990	0,14	0,01	0,14
C282	TOPUKLUK - C	S 235	NC8	1250,010	0,14	0,01	0,14
C283	TOPUKLUK - C	S 235	NC8	1250,010	0,06	0,01	0,06
C284	TOPUKLUK - C	S 235	NC8	1249,990	0,06	0,01	0,06
C285	TOPUKLUK - C	S 235	NC8	1249,990	0,07	0,01	0,07
C286	TOPUKLUK - C	S 235	NC8	1249,990	0,22	0,01	0,22
CP206	DIYAGONAL - CHS	S 235	NC8	2957,431	0,09	0,09	0,00
CP207	DIYAGONAL - CHS	S 235	NC8	2957,431	0,09	0,09	0,00
CP208	DIYAGONAL - CHS	S 235	NC8	2957,431	0,10	0,10	0,00
CP209	DIYAGONAL - CHS	S 235	NC8	2957,431	0,10	0,10	0,00
CP210	DIYAGONAL - CHS	S 235	NC8	2957,431	0,09	0,09	0,00
CP211	DIYAGONAL - CHS	S 235	NC8	2957,431	0,09	0,09	0,00
B1686	DİKME - CFCHS48.3X3	S 235	NC8	110,000	0,32	0,32	0,00
B1687	DİKME - CFCHS48.3X3	S 235	NC8	2000,000	0,28	0,28	0,00
B1688	DİKME - CFCHS48.3X3	S 235	NC8	110,000	0,44	0,44	0,00
B1689	DIKME - CFCHS48.3X3	S 235	NC8	0,000	0,36	0,36	0,00
B1690	DİKME - CFCHS48.3X3	S 235	NC8	110,000	0,42	0,42	0,00
B1691	DIKME - CFCHS48.3X3	S 235	NC8	0,000	0,38	0,38	0,00
B1692	DİKME - CFCHS48.3X3	S 235	NC8	110,000	0,44	0,44	0,00
B1693	DİKME - CFCHS48.3X3	S 235	NC8	0,000	0,40	0,40	0,00
B1694	DİKME - CFCHS48.3X3	S 235	NC8	110,000	0,46	0,46	0,00
B1695	DİKME - CFCHS48.3X3	S 235	NC8	0,000	0,41	0,41	0,00
B1696	DİKME - CFCHS48.3X3	S 235	NC8	110,000	0,53	0,53	0,00
B1697	DİKME - CFCHS48.3X3	S 235	NC8	0,000	0,42	0,42	0,00
B1698	DİKME - CFCHS48.3X3	S 235	NC8	110,000	0,46	0,46	0,00
B1699	DİKME - CFCHS48.3X3	S 235	NC8	0,000	0,41	0,41	0,00
B1700	DİKME - CFCHS48.3X3	S 235	NC8	110,000	0,44	0,44	0,00
B1701	DIKME - CFCHS48.3X3	S 235	NC8	0,000	0,40	0,40	0,00
B1702	ALT_PROFIL - RHS	S 235	NC8	200,000	0,18	0,08	0,18
B1703	ALT_PROFIL - RHS	S 235	NC8	200,000	0,21	0,12	0,21
B1704	ALT_PROFIL - RHS	S 235	NC8	200,000	0,20	0,13	0,20
B1705	ALT_PROFIL - RHS	S 235	NC8	200,000	0,20	0,13	0,20
B1706	ALT_PROFIL - RHS	S 235	NC8	700,000	0,20	0,19	0,20
B1707	ALT_PROFIL - RHS	S 235	NC8	200,000	0,19	0,13	0,19
B1708	ALT_PROFIL - RHS	S 235	NC8	700,000	0,20	0,19	0,20
B1709	ALT_PROFIL - RHS	S 235	NC8	200,000	0,20	0,13	0,20
B1710	DİKME - CFCHS48.3X3	S 235	NC8	110,000	0,42	0,42	0,00
B1711	DİKME - CFCHS48.3X3	S 235	NC8	0,000	0,38	0,38	0,00
B1712	ALT_PROFIL - RHS	S 235	NC8	200,000	0,21	0,13	0,21
B1713	DİKME - CFCHS48.3X3	S 235	NC8	110,000	0,44	0,44	0,00
B1714	DIKME - CFCHS48.3X3	S 235	NC8	0,000	0,36	0,36	0,00
B1715	ALT_PROFIL - RHS	S 235	NC8	200,000	0,21	0,12	0,21
B1716	DIKME - CFCHS48.3X3	S 235	NC8	110,000	0,32	0,32	0,00
B1717	DİKME - CFCHS48.3X3	S 235	NC8	2000,000	0,28	0,28	0,00
B1718	ALT_PROFIL - RHS	S 235	NC8	200,000	0,18	0,08	0,18
B1719	ÜST_PROFIL - RHS	S 235	NC8	700,000	0,12	0,09	0,12
B1720	ÜST_PROFIL - RHS	S 235	NC8	0,000	0,13	0,11	0,13
B1721	ÜST_PROFIL - RHS	S 235	NC8	700,000	0,11	0,10	0,11
B1722	ÜST_PROFIL - RHS	S 235	NC8	700,000	0,12	0,10	0,12
B1723	ÜST_PROFIL - RHS	S 235	NC8	700,000	0,13	0,11	0,13
B1724	ÜST_PROFIL - RHS	S 235	NC8	0,000	0,17	0,15	0,17
B1725	ÜST_PROFIL - RHS	S 235	NC8	700,000	0,13	0,11	0,13
B1726	ÜST_PROFIL - RHS	S 235	NC8	700,000	0,12	0,10	0,12
B1727	ÜST_PROFIL - RHS	S 235	NC8	700,000	0,11	0,10	0,11
B1728	ÜST_PROFIL - RHS	S 235	NC8	0,000	0,13	0,11	0,13
B1729	ÜST_PROFIL - RHS	S 235	NC8	700,000	0,12	0,09	0,12
B1730	YATAY - CHS	S 235	NC8	1249,990	0,08	0,08	0,00
B1731	YATAY - CHS	S 235	NC8	1249,990	0,08	0,08	0,00
B1732	YATAY - CHS	S 235	NC8	1249,990	0,08	0,08	0,00
B1733	YATAY - CHS	S 235	NC8	1249,990	0,08	0,08	0,00
B1734	YATAY - CHS	S 235	NC8	1249,990	0,08	0,08	0,00
B1735	YATAY - CHS	S 235	NC8	1249,990	0,08	0,08	0,00
B1736	YATAY - CHS	S 235	NC8	1249,990	0,08	0,08	0,00
B1737	YATAY - CHS	S 235	NC8	1249,990	0,08	0,08	0,00
B1738	YATAY - CHS	S 235	NC8	1249,990	0,08	0,08	0,00
B1739	YATAY - CHS	S 235	NC8	1249,990	0,08	0,08	0,00
B1740	YATAY - CHS	S 235	NC8	1249,990	0,08	0,08	0,00
B1741	YATAY - CHS	S 235	NC8	1249,990	0,08	0,08	0,00
B1742	YATAY - CHS	S 235	NC8	1249,990	0,08	0,08	0,00
B1743	YATAY - CHS	S 235	NC8	1249,990	0,08	0,08	0,00
B1744	YATAY - CHS	S 235	NC8	1249,990	0,08	0,08	0,00

Member	css	mat	Case	dx [mm]	un.check [-]	sec.check [-]	stab.check [-]
B1745	YATAY - CHS	S 235	NC8	1249,990	0,08	0,08	0,00
B1746	YATAY - CHS	S 235	NC8	1249,990	0,08	0,08	0,00
B1747	YATAY - CHS	S 235	NC8	1249,990	0,08	0,08	0,00
B1748	YATAY - CHS	S 235	NC8	1249,990	0,08	0,08	0,00
B1749	YATAY - CHS	S 235	NC8	1249,990	0,08	0,08	0,00
PL441	Platform - General cross-section	S 235	NC8	1562,500	0,03	0,03	0,03
PL442	Platform - General cross-section	S 235	NC8	2500,000	0,04	0,01	0,04
PL443	Platform - General cross-section	S 235	NC8	1249,990	0,04	0,04	0,04
PL444	Platform - General cross-section	S 235	NC8	2500,000	0,04	0,01	0,04
PL445	Platform - General cross-section	S 235	NC8	1249,990	0,03	0,03	0,03
PL446	Platform - General cross-section	S 235	NC8	2500,000	0,04	0,01	0,04
PL447	Platform - General cross-section	S 235	NC8	1249,990	0,03	0,03	0,03
PL448	Platform - General cross-section	S 235	NC8	2500,000	0,04	0,01	0,04
PL449	Platform - General cross-section	S 235	NC8	1250,010	0,03	0,03	0,03
PL450	Platform - General cross-section	S 235	NC8	1562,500	0,04	0,03	0,04
PL451	Platform - General cross-section	S 235	NC8	1249,990	0,03	0,03	0,03
PL452	Platform - General cross-section	S 235	NC8	1249,990	0,04	0,04	0,04
PL453	Platform - General cross-section	S 235	NC8	1250,010	0,03	0,03	0,03
PL454	Platform - General cross-section	S 235	NC8	1250,010	0,04	0,04	0,04
PL455	Platform - General cross-section	S 235	NC8	1250,010	0,03	0,03	0,03
PL456	Platform - General cross-section	S 235	NC8	1250,010	0,04	0,04	0,04
PL457	Platform - General cross-section	S 235	NC8	1250,010	0,04	0,04	0,04
PL458	Platform - General cross-section	S 235	NC8	1250,010	0,04	0,04	0,04
PL459	Platform - General cross-section	S 235	NC8	937,500	0,03	0,03	0,03
PL460	Platform - General cross-section	S 235	NC8	1249,990	0,04	0,04	0,04
C287	TOPUKLUK - C	S 235	NC7	1249,990	0,15	0,01	0,15
C288	TOPUKLUK - C	S 235	NC8	1250,010	0,06	0,01	0,06
C289	TOPUKLUK - C	S 235	NC8	1249,990	0,11	0,01	0,11
C290	TOPUKLUK - C	S 235	NC8	1250,010	0,06	0,01	0,06
C291	TOPUKLUK - C	S 235	NC8	1249,990	0,06	0,01	0,06
C292	TOPUKLUK - C	S 235	NC8	1250,010	0,06	0,01	0,06
C293	TOPUKLUK - C	S 235	NC8	1249,990	0,06	0,01	0,06
C294	TOPUKLUK - C	S 235	NC8	1250,010	0,10	0,01	0,10
C295	TOPUKLUK - C	S 235	NC8	1249,990	0,06	0,01	0,06
C296	TOPUKLUK - C	S 235	NC4	1249,990	0,13	0,01	0,13
CP212	DIYAGONAL - CHS	S 235	NC8	0,000	0,11	0,11	0,00
CP213	DIYAGONAL - CHS	S 235	NC8	0,000	0,13	0,13	0,00
CP214	DIYAGONAL - CHS	S 235	NC8	0,000	0,14	0,14	0,00
CP215	DIYAGONAL - CHS	S 235	NC8	0,000	0,14	0,14	0,00
CP216	DIYAGONAL - CHS	S 235	NC8	0,000	0,13	0,13	0,00
CP217	DIYAGONAL - CHS	S 235	NC8	0,000	0,11	0,11	0,00
B1750	DİKME - CFCHS48.3X3	S 235	NC8	2000,000	0,30	0,30	0,00
B1751	DİKME - CFCHS48.3X3	S 235	NC8	110,000	0,24	0,24	0,00
B1752	DİKME - CFCHS48.3X3	S 235	NC8	2000,000	0,35	0,35	0,00
B1753	DİKME - CFCHS48.3X3	S 235	NC8	110,000	0,31	0,31	0,00
B1754	DIKME - CFCHS48.3X3	S 235	NC8	2000,000	0,40	0,40	0,00
B1755	DİKME - CFCHS48.3X3	S 235	NC8	110,000	0,33	0,33	0,00
B1756	DIKME - CFCHS48.3X3	S 235	NC8	2000,000	0,40	0,40	0,00
B1757	DİKME - CFCHS48.3X3	S 235	NC8	110,000	0,35	0,35	0,00
B1758	DİKME - CFCHS48.3X3	S 235	NC8	2000,000	0,44	0,44	0,00
B1759	DİKME - CFCHS48.3X3	S 235	NC8	110,000	0,36	0,36	0,00
B1760	DIKME - CFCHS48.3X3	S 235	NC8	2000,000	0,42	0,42	0,00
B1761	DİKME - CFCHS48.3X3	S 235	NC8	110,000	0,37	0,37	0,00
B1762	DIKME - CFCHS48.3X3	S 235	NC8	2000,000	0,44	0,44	0,00
B1763	DİKME - CFCHS48.3X3	S 235	NC8	110,000	0,36	0,36	0,00
B1764	DİKME - CFCHS48.3X3	S 235	NC8	2000,000	0,40	0,40	0,00
B1765	DİKME - CFCHS48.3X3	S 235	NC8	110,000	0,35	0,35	0,00
B1766	ALT_PROFIL - RHS	S 235	NC8	0,000	0,13	0,11	0,13
B1767	ALT_PROFIL - RHS	S 235	NC8	500,000	0,20	0,08	0,20
B1768	ALT_PROFIL - RHS	S 235	NC8	500,000	0,24	0,09	0,24
B1769	ALT_PROFIL - RHS	S 235	NC8	500,000	0,23	0,09	0,23
B1770	ALT_PROFIL - RHS	S 235	NC8	500,000	0,24	0,09	0,24
B1771	ALT_PROFIL - RHS	S 235	NC8	500,000	0,21	0,08	0,21
B1772	ALT_PROFIL - RHS	S 235	NC8	500,000	0,24	0,09	0,24
B1773	ALT_PROFIL - RHS	S 235	NC8	500,000	0,23	0,09	0,23
B1774	DİKME - CFCHS48.3X3	S 235	NC8	2000,000	0,40	0,40	0,00
B1775	DIKME - CFCHS48.3X3	S 235	NC8	110,000	0,33	0,33	0,00
B1776	ALT_PROFIL - RHS	S 235	NC8	500,000	0,24	0,09	0,24
B1777	DIKME - CFCHS48.3X3	S 235	NC8	2000,000	0,36	0,36	0,00
B1778	DİKME - CFCHS48.3X3	S 235	NC8	110,000	0,31	0,31	0,00
B1779	ALT_PROFIL - RHS	S 235	NC8	500,000	0,20	0,08	0,20
B1780	DİKME - CFCHS48.3X3	S 235	NC8	2000,000	0,29	0,29	0,00
B1781	DİKME - CFCHS48.3X3	S 235	NC8	110,000	0,24	0,24	0,00
B1782	ALT_PROFIL - RHS	S 235	NC8	0,000	0,13	0,11	0,13
B1783	UST_PROFIL - RHS	S 235	NC8	700,000	0,06	0,05	0,06
B1784	ÜST_PROFIL - RHS	S 235	NC8	700,000	0,10	0,09	0,10

Member	css	mat	Case	dx [mm]	un.check [-]	sec.check [-]	stab.check [-]
B1785	ÜST_PROFIL - RHS	S 235	NC8	700,000	0,10	0,09	0,10
B1786	ÜST_PROFIL - RHS	S 235	NC8	700,000	0,10	0,10	0,10
B1787	ÜST_PROFIL - RHS	S 235	NC8	700,000	0,10	0,10	0,10
B1788	ÜST_PROFIL - RHS	S 235	NC8	700,000	0,11	0,11	0,11
B1789	ÜST_PROFIL - RHS	S 235	NC8	700,000	0,10	0,10	0,10
B1790	ÜST_PROFIL - RHS	S 235	NC8	700,000	0,10	0,10	0,10
B1791	ÜST_PROFIL - RHS	S 235	NC8	700,000	0,10	0,09	0,10
B1792	ÜST_PROFIL - RHS	S 235	NC8	700,000	0,10	0,09	0,10
B1793	ÜST_PROFIL - RHS	S 235	NC8	700,000	0,06	0,05	0,06
B1794	YATAY - CHS	S 235	NC8	1249,990	0,08	0,08	0,00
B1795	YATAY - CHS	S 235	NC8	1249,990	0,08	0,08	0,00
B1796	YATAY - CHS	S 235	NC8	1249,990	0,08	0,08	0,00
B1797	YATAY - CHS	S 235	NC8	1249,990	0,08	0,08	0,00
B1798	YATAY - CHS	S 235	NC8	1249,990	0,08	0,08	0,00
B1799	YATAY - CHS	S 235	NC8	1249,990	0,08	0,08	0,00
B1800	YATAY - CHS	S 235	NC8	1249,990	0,08	0,08	0,00
B1801	YATAY - CHS	S 235	NC8	1249,990	0,08	0,08	0,00
B1802	YATAY - CHS	S 235	NC8	1249,990	0,08	0,08	0,00
B1803	YATAY - CHS	S 235	NC8	1249,990	0,08	0,08	0,00
B1804	YATAY - CHS	S 235	NC8	1249,990	0,08	0,08	0,00
B1805	YATAY - CHS	S 235	NC8	1249,990	0,08	0,08	0,00
B1806	YATAY - CHS	S 235	NC8	1249,990	0,08	0,08	0,00
B1807	YATAY - CHS	S 235	NC8	1249,990	0,08	0,08	0,00
B1808	YATAY - CHS	S 235	NC8	1249,990	0,08	0,08	0,00
B1809	YATAY - CHS	S 235	NC8	1249,990	0,08	0,08	0,00
B1810	YATAY - CHS	S 235	NC8	1249,990	0,08	0,08	0,00
B1811	YATAY - CHS	S 235	NC8	1249,990	0,08	0,08	0,00
B1812	YATAY - CHS	S 235	NC8	1249,990	0,08	0,08	0,00
B1813	YATAY - CHS	S 235	NC8	1249,990	0,08	0,08	0,00
PL461	Platform - General cross-section	S 235	NC8	1250,010	0,02	0,02	0,02
PL462	Platform - General cross-section	S 235	NC8	1093,750	0,03	0,03	0,03
PL463	Platform - General cross-section	S 235	NC7	1249,990	0,02	0,02	0,02
PL464	Platform - General cross-section	S 235	NC8	1250,010	0,03	0,03	0,03
PL465	Platform - General cross-section	S 235	NC8	1249,990	0,02	0,02	0,02
PL466	Platform - General cross-section	S 235	NC8	2500,000	0,03	0,01	0,03
PL467	Platform - General cross-section	S 235	NC8	1250,010	0,02	0,02	0,02
PL468	Platform - General cross-section	S 235	NC8	2500,000	0,03	0,01	0,03
PL469	Platform - General cross-section	S 235	NC7	2500,000	0,02	0,00	0,02
PL470	Platform - General cross-section	S 235	NC8	2500,000	0,04	0,01	0,04
PL471	Platform - General cross-section	S 235	NC8	1249,990	0,02	0,02	0,02
PL472	Platform - General cross-section	S 235	NC8	1250,010	0,04	0,03	0,04
PL473	Platform - General cross-section	S 235	NC7	1249,990	0,02	0,02	0,02
PL474	Platform - General cross-section	S 235	NC8	1249,990	0,03	0,03	0,03
PL475	Platform - General cross-section	S 235	NC3	1250,010	0,02	0,02	0,02
PL476	Platform - General cross-section	S 235	NC8	1250,010	0,03	0,03	0,03
PL477	Platform - General cross-section	S 235	NC7	2500,000	0,02	0,00	0,02
PL478	Platform - General cross-section	S 235	NC1	2500,000	0,03	0,01	0,03
PL479	Platform - General cross-section	S 235	NC7	1250,010	0,02	0,02	0,02
PL480	Platform - General cross-section	S 235	NC8	1406,250	0,03	0,03	0,03
C297	TOPUKLUK - C	S 235	NC8	1250,010	0,23	0,02	0,23
C298	TOPUKLUK - C	S 235	NC8	1249,990	0,07	0,01	0,07
C299	TOPUKLUK - C	S 235	NC8	1249,990	0,06	0,01	0,06
C300	TOPUKLUK - C	S 235	NC8	1249,990	0,06	0,01	0,06
C301	TOPUKLUK - C	S 235	NC8	1249,990	0,14	0,01	0,14
C302	TOPUKLUK - C	S 235	NC8	1250,010	0,14	0,01	0,14
C303	TOPUKLUK - C	S 235	NC8	1250,010	0,06	0,01	0,06
C304	TOPUKLUK - C	S 235	NC8	1249,990	0,06	0,01	0,06
C305	TOPUKLUK - C	S 235	NC8	1250,010	0,07	0,01	0,07
C306	TOPUKLUK - C	S 235	NC8	1249,990	0,22	0,02	0,22
CP218	DIYAGONAL - CHS	S 235	NC8	2957,431	0,09	0,09	0,00
CP219	DIYAGONAL - CHS	S 235	NC8	2957,431	0,09	0,09	0,00
CP220	DIYAGONAL - CHS	S 235	NC8	2957,431	0,10	0,10	0,00
CP221	DIYAGONAL - CHS	S 235	NC8	2957,431	0,10	0,10	0,00
CP222	DIYAGONAL - CHS	S 235	NC8	2957,431	0,09	0,09	0,00
CP223	DIYAGONAL - CHS	S 235	NC8	2957,431	0,09	0,09	0,00
B1814	DİKME - CFCHS48.3X3	S 235	NC8	110,000	0,32	0,32	0,00
B1815	DIKME - CFCHS48.3X3	S 235	NC8	2000,000	0,27	0,27	0,00
B1816	DİKME - CFCHS48.3X3	S 235	NC8	110,000	0,43	0,43	0,00
B1817	DIKME - CFCHS48.3X3	S 235	NC8	0,000	0,35	0,35	0,00
B1818	DİKME - CFCHS48.3X3	S 235	NC8	110,000	0,41	0,41	0,00
B1819	DİKME - CFCHS48.3X3	S 235	NC8	0,000	0,38	0,38	0,00
B1820	DİKME - CFCHS48.3X3	S 235	NC8	110,000	0,43	0,43	0,00
B1821	DİKME - CFCHS48.3X3	S 235	NC8	0,000	0,40	0,40	0,00
B1822	DİKME - CFCHS48.3X3	S 235	NC8	110,000	0,45	0,45	0,00
B1823	DIKME - CFCHS48.3X3	S 235	NC8	0,000	0,40	0,40	0,00
B1824	DİKME - CFCHS48.3X3	S 235	NC8	110,000	0,52	0,52	0,00

Member	css	mat	Case	dx [mm]	un.check [-]	sec.check [-]	stab.check [-]
B1825	DİKME - CFCHS48.3X3	S 235	NC8	0,000	0,42	0,42	0,00
B1826	DİKME - CFCHS48.3X3	S 235	NC8	110,000	0,45	0,45	0,00
B1827	DİKME - CFCHS48.3X3	S 235	NC8	0,000	0,40	0,40	0,00
B1828	DİKME - CFCHS48.3X3	S 235	NC8	110,000	0,43	0,43	0,00
B1829	DİKME - CFCHS48.3X3	S 235	NC8	0,000	0,40	0,40	0,00
B1830	ALT_PROFIL - RHS	S 235	NC8	200,000	0,18	0,08	0,18
B1831	ALT_PROFIL - RHS	S 235	NC8	200,000	0,20	0,11	0,20
B1832	ALT_PROFIL - RHS	S 235	NC8	200,000	0,20	0,12	0,20
B1833	ALT_PROFIL - RHS	S 235	NC8	200,000	0,20	0,13	0,20
B1834	ALT_PROFIL - RHS	S 235	NC8	700,000	0,20	0,19	0,20
B1835	ALT_PROFIL - RHS	S 235	NC8	200,000	0,19	0,13	0,19
B1836	ALT_PROFIL - RHS	S 235	NC8	700,000	0,20	0,19	0,20
B1837	ALT_PROFIL - RHS	S 235	NC8	200,000	0,20	0,13	0,20
B1838	DİKME - CFCHS48.3X3	S 235	NC8	110,000	0,41	0,41	0,00
B1839	DİKME - CFCHS48.3X3	S 235	NC8	0,000	0,38	0,38	0,00
B1840	ALT_PROFIL - RHS	S 235	NC8	200,000	0,20	0,12	0,20
B1841	DİKME - CFCHS48.3X3	S 235	NC8	110,000	0,43	0,43	0,00
B1842	DİKME - CFCHS48.3X3	S 235	NC8	0,000	0,35	0,35	0,00
B1843	ALT_PROFIL - RHS	S 235	NC8	200,000	0,20	0,11	0,20
B1844	DİKME - CFCHS48.3X3	S 235	NC8	110,000	0,32	0,32	0,00
B1845	DİKME - CFCHS48.3X3	S 235	NC8	2000,000	0,27	0,27	0,00
B1846	ALT_PROFIL - RHS	S 235	NC8	200,000	0,18	0,08	0,18
B1847	ÜST_PROFIL - RHS	S 235	NC8	700,000	0,12	0,09	0,12
B1848	ÜST_PROFIL - RHS	S 235	NC8	0,000	0,13	0,11	0,13
B1849	ÜST_PROFIL - RHS	S 235	NC8	700,000	0,11	0,09	0,11
B1850	ÜST_PROFIL - RHS	S 235	NC8	700,000	0,12	0,10	0,12
B1851	ÜST_PROFIL - RHS	S 235	NC8	700,000	0,13	0,11	0,13
B1852	ÜST_PROFIL - RHS	S 235	NC8	0,000	0,16	0,14	0,16
B1853	ÜST_PROFIL - RHS	S 235	NC8	700,000	0,13	0,11	0,13
B1854	ÜST_PROFIL - RHS	S 235	NC8	700,000	0,12	0,10	0,12
B1855	ÜST_PROFIL - RHS	S 235	NC8	700,000	0,11	0,09	0,11
B1856	ÜST_PROFIL - RHS	S 235	NC8	0,000	0,13	0,11	0,13
B1857	ÜST_PROFIL - RHS	S 235	NC8	700,000	0,12	0,09	0,12
B1858	YATAY - CHS	S 235	NC8	1249,990	0,08	0,08	0,00
B1859	YATAY - CHS	S 235	NC8	1249,990	0,08	0,08	0,00
B1860	YATAY - CHS	S 235	NC8	1249,990	0,08	0,08	0,00
B1861	YATAY - CHS	S 235	NC8	1249,990	0,08	0,08	0,00
B1862	YATAY - CHS	S 235	NC8	1249,990	0,08	0,08	0,00
B1863	YATAY - CHS	S 235	NC8	1249,990	0,08	0,08	0,00
B1864	YATAY - CHS	S 235	NC8	1249,990	0,08	0,08	0,00
B1865	YATAY - CHS	S 235	NC8	1249,990	0,08	0,08	0,00
B1866	YATAY - CHS	S 235	NC8	1249,990	0,08	0,08	0,00
B1867	YATAY - CHS	S 235	NC8	1249,990	0,08	0,08	0,00
B1868	YATAY - CHS	S 235	NC8	1249,990	0,08	0,08	0,00
B1869	YATAY - CHS	S 235	NC8	1249,990	0,08	0,08	0,00
B1870	YATAY - CHS	S 235	NC8	1249,990	0,08	0,08	0,00
B1871	YATAY - CHS	S 235	NC8	1249,990	0,08	0,08	0,00
B1872	YATAY - CHS	S 235	NC8	1250,010	0,08	0,08	0,00
B1873	YATAY - CHS	S 235	NC8	1249,990	0,08	0,08	0,00
B1874	YATAY - CHS	S 235	NC8	1249,990	0,08	0,08	0,00
B1875	YATAY - CHS	S 235	NC8	1249,990	0,08	0,08	0,00
B1876	YATAY - CHS	S 235	NC8	1249,990	0,08	0,08	0,00
B1877	YATAY - CHS	S 235	NC8	1249,990	0,08	0,08	0,00
PL481	Platform - General cross-section	S 235	NC8	1562,500	0,03	0,03	0,03
PL482	Platform - General cross-section	S 235	NC8	2500,000	0,04	0,01	0,04
PL483	Platform - General cross-section	S 235	NC8	1249,990	0,04	0,04	0,04
PL484	Platform - General cross-section	S 235	NC8	2500,000	0,04	0,01	0,04
PL485	Platform - General cross-section	S 235	NC8	1249,990	0,03	0,03	0,03
PL486	Platform - General cross-section	S 235	NC8	2500,000	0,04	0,01	0,04
PL487	Platform - General cross-section	S 235	NC8	1249,990	0,03	0,03	0,03
PL488	Platform - General cross-section	S 235	NC8	2500,000	0,04	0,01	0,04
PL489	Platform - General cross-section	S 235	NC8	1250,010	0,03	0,03	0,03
PL490	Platform - General cross-section	S 235	NC8	1562,500	0,04	0,03	0,04
PL491	Platform - General cross-section	S 235	NC8	1249,990	0,03	0,03	0,03
PL492	Platform - General cross-section	S 235	NC8	1249,990	0,04	0,04	0,04
PL493	Platform - General cross-section	S 235	NC8	1250,010	0,03	0,03	0,03
PL494	Platform - General cross-section	S 235	NC8	1250,010	0,04	0,04	0,04
PL495	Platform - General cross-section	S 235	NC8	1250,010	0,03	0,03	0,03
PL496	Platform - General cross-section	S 235	NC8	1250,010	0,04	0,04	0,04
PL497	Platform - General cross-section	S 235	NC8	1250,010	0,04	0,04	0,04
PL498	Platform - General cross-section	S 235	NC8	1250,010	0,04	0,04	0,04
PL499	Platform - General cross-section	S 235	NC8	937,500	0,03	0,03	0,03
PL500	Platform - General cross-section	S 235	NC8	1249,990	0,04	0,04	0,04
C307	TOPUKLUK - C	S 235	NC7	1249,990	0,15	0,01	0,15
C308	TOPUKLUK - C	S 235	NC8	1250,010	0,06	0,01	0,06
C309	TOPUKLUK - C	S 235	NC8	1249,990	0,10	0,01	0,10

Member	css	mat	Case	dx [mm]	un.check [-]	sec.check [-]	stab.check [-]
C310	TOPUKLUK - C	S 235	NC8	1250,010	0,06	0,01	0,06
C311	TOPUKLUK - C	S 235	NC8	1249,990	0,06	0,01	0,06
C312	TOPUKLUK - C	S 235	NC8	1250,010	0,06	0,01	0,06
C313	TOPUKLUK - C	S 235	NC8	1249,990	0,06	0,01	0,06
C314	TOPUKLUK - C	S 235	NC8	1250,010	0,06	0,01	0,06
C315	TOPUKLUK - C	S 235	NC8	1249,990	0,06	0,01	0,06
C316	TOPUKLUK - C	S 235	NC4	1249,990	0,14	0,01	0,14
CP224	DIYAGONAL - CHS	S 235	NC8	0,000	0,11	0,11	0,00
CP225	DIYAGONAL - CHS	S 235	NC8	0,000	0,13	0,13	0,00
CP226	DIYAGONAL - CHS	S 235	NC8	0,000	0,14	0,14	0,00
CP227	DIYAGONAL - CHS	S 235	NC8	0,000	0,14	0,14	0,00
CP228	DIYAGONAL - CHS	S 235	NC8	0,000	0,13	0,13	0,00
CP229	DIYAGONAL - CHS	S 235	NC8	0,000	0,11	0,11	0,00
B1878	DİKME - CFCHS48.3X3	S 235	NC8	2000,000	0,29	0,29	0,00
B1879	DİKME - CFCHS48.3X3	S 235	NC8	110,000	0,23	0,23	0,00
B1880	DİKME - CFCHS48.3X3	S 235	NC8	2000,000	0,35	0,35	0,00
B1881	DİKME - CFCHS48.3X3	S 235	NC8	110,000	0,30	0,30	0,00
B1882	DİKME - CFCHS48.3X3	S 235	NC8	2000,000	0,40	0,40	0,00
B1883	DİKME - CFCHS48.3X3	S 235	NC8	110,000	0,33	0,33	0,00
B1884	DİKME - CFCHS48.3X3	S 235	NC8	2000,000	0,39	0,39	0,00
B1885	DIKME - CFCHS48.3X3	S 235	NC8	110,000	0,35	0,35	0,00
B1886	DİKME - CFCHS48.3X3	S 235	NC8	2000,000	0,43	0,43	0,00
B1887	DIKME - CFCHS48.3X3	S 235	NC8	110,000	0,35	0,35	0,00
B1888	DİKME - CFCHS48.3X3	S 235	NC8	2000,000	0,41	0,41	0,00
B1889	DİKME - CFCHS48.3X3	S 235	NC8	110,000	0,36	0,36	0,00
B1890	DİKME - CFCHS48.3X3	S 235	NC8	2000,000	0,43	0,43	0,00
B1891	DİKME - CFCHS48.3X3	S 235	NC8	110,000	0,35	0,35	0,00
B1892	DİKME - CFCHS48.3X3	S 235	NC8	2000,000	0,39	0,39	0,00
B1893	DİKME - CFCHS48.3X3	S 235	NC8	110,000	0,35	0,35	0,00
B1894	ALT_PROFIL - RHS	S 235	NC8	0,000	0,13	0,11	0,13
B1895	ALT_PROFIL - RHS	S 235	NC8	500,000	0,20	0,07	0,20
B1896	ALT_PROFIL - RHS	S 235	NC8	500,000	0,23	0,09	0,23
B1897	ALT_PROFIL - RHS	S 235	NC8	500,000	0,22	0,09	0,22
B1898	ALT_PROFIL - RHS	S 235	NC8	500,000	0,23	0,09	0,23
B1899	ALT_PROFIL - RHS	S 235	NC8	500,000	0,20	0,08	0,20
B1900	ALT_PROFIL - RHS	S 235	NC8	500,000	0,23	0,09	0,23
B1901	ALT_PROFIL - RHS	S 235	NC8	500,000	0,22	0,09	0,22
B1902	DIKME - CFCHS48.3X3	S 235	NC8	2000,000	0,40	0,40	0,00
B1903	DİKME - CFCHS48.3X3	S 235	NC8	110,000	0,33	0,33	0,00
B1904	ALT_PROFIL - RHS	S 235	NC8	500,000	0,23	0,09	0,23
B1905	DİKME - CFCHS48.3X3	S 235	NC8	2000,000	0,35	0,35	0,00
B1906	DİKME - CFCHS48.3X3	S 235	NC8	110,000	0,30	0,30	0,00
B1907	ALT_PROFIL - RHS	S 235	NC8	500,000	0,20	0,08	0,20
B1908	DİKME - CFCHS48.3X3	S 235	NC8	2000,000	0,29	0,29	0,00
B1909	DİKME - CFCHS48.3X3	S 235	NC8	110,000	0,23	0,23	0,00
B1910	ALT_PROFIL - RHS	S 235	NC8	0,000	0,13	0,11	0,13
B1911	ÜST_PROFIL - RHS	S 235	NC8	700,000	0,06	0,05	0,06
B1912	ÜST_PROFIL - RHS	S 235	NC8	700,000	0,10	0,09	0,10
B1913	ÜST_PROFIL - RHS	S 235	NC8	700,000	0,10	0,09	0,10
B1914	ÜST_PROFIL - RHS	S 235	NC8	700,000	0,10	0,10	0,10
B1915	ÜST_PROFIL - RHS	S 235	NC8	700,000	0,10	0,09	0,10
B1916	ÜST_PROFIL - RHS	S 235	NC8	700,000	0,11	0,11	0,11
B1917	ÜST_PROFIL - RHS	S 235	NC8	700,000	0,10	0,09	0,10
B1918	ÜST_PROFIL - RHS	S 235	NC8	700,000	0,10	0,10	0,10
B1919	ÜST_PROFIL - RHS	S 235	NC8	700,000	0,10	0,09	0,10
B1920	ÜST_PROFIL - RHS	S 235	NC8	700,000	0,10	0,09	0,10
B1921	ÜST_PROFIL - RHS	S 235	NC8	700,000	0,06	0,05	0,06
B1922	YATAY - CHS	S 235	NC8	1249,990	0,08	0,08	0,00
B1923	YATAY - CHS	S 235	NC8	1249,990	0,08	0,08	0,00
B1924	YATAY - CHS	S 235	NC8	1249,990	0,08	0,08	0,00
B1925	YATAY - CHS	S 235	NC8	1249,990	0,08	0,08	0,00
B1926	YATAY - CHS	S 235	NC8	1249,990	0,08	0,08	0,00
B1927	YATAY - CHS	S 235	NC8	1249,990	0,08	0,08	0,00
B1928	YATAY - CHS	S 235	NC8	1249,990	0,08	0,08	0,00
B1929	YATAY - CHS	S 235	NC8	1249,990	0,08	0,08	0,00
B1930	YATAY - CHS	S 235	NC8	1249,990	0,08	0,08	0,00
B1931	YATAY - CHS	S 235	NC8	1249,990	0,08	0,08	0,00
B1932	YATAY - CHS	S 235	NC8	1249,990	0,08	0,08	0,00
B1933	YATAY - CHS	S 235	NC8	1249,990	0,08	0,08	0,00
B1934	YATAY - CHS	S 235	NC8	1249,990	0,08	0,08	0,00
B1935	YATAY - CHS	S 235	NC8	1249,990	0,08	0,08	0,00
B1936	YATAY - CHS	S 235	NC8	1249,990	0,08	0,08	0,00
B1937	YATAY - CHS	S 235	NC8	1249,990	0,08	0,08	0,00
B1938	YATAY - CHS	S 235	NC8	1249,990	0,08	0,08	0,00
B1939	YATAY - CHS	S 235	NC8	1249,990	0,08	0,08	0,00
B1940	YATAY - CHS	S 235	NC8	1249,990	0,08	0,08	0,00

Member	css	mat	Case	dx [mm]	un.check [-]	sec.check [-]	stab.check [-]
B1941	YATAY - CHS	S 235	NC8	1249,990	0,08	0,08	0,00
PL501	Platform - General cross-section	S 235	NC7	1249,990	0,02	0,02	0,02
PL502	Platform - General cross-section	S 235	NC8	1093,750	0,03	0,03	0,03
PL503	Platform - General cross-section	S 235	NC7	1249,990	0,02	0,02	0,02
PL504	Platform - General cross-section	S 235	NC1	1250,010	0,03	0,03	0,03
PL505	Platform - General cross-section	S 235	NC8	1249,990	0,02	0,02	0,02
PL506	Platform - General cross-section	S 235	NC8	2500,000	0,03	0,01	0,03
PL507	Platform - General cross-section	S 235	NC8	1250,010	0,02	0,02	0,02
PL508	Platform - General cross-section	S 235	NC8	1562,500	0,03	0,03	0,03
PL509	Platform - General cross-section	S 235	NC7	2500,000	0,02	0,00	0,02
PL510	Platform - General cross-section	S 235	NC8	2500,000	0,04	0,01	0,04
PL511	Platform - General cross-section	S 235	NC8	1249,990	0,02	0,02	0,02
PL512	Platform - General cross-section	S 235	NC8	1250,010	0,04	0,03	0,04
PL513	Platform - General cross-section	S 235	NC7	1249,990	0,02	0,02	0,02
PL514	Platform - General cross-section	S 235	NC8	1249,990	0,03	0,03	0,03
PL515	Platform - General cross-section	S 235	NC6	1250,010	0,02	0,02	0,02
PL516	Platform - General cross-section	S 235	NC8	1250,010	0,03	0,03	0,03
PL517	Platform - General cross-section	S 235	NC7	2500,000	0,02	0,00	0,02
PL518	Platform - General cross-section	S 235	NC1	2500,000	0,03	0,01	0,03
PL519	Platform - General cross-section	S 235	NC5	1250,010	0,02	0,02	0,02
PL520	Platform - General cross-section	S 235	NC8	1406,250	0,03	0,03	0,03
C317	TOPUKLUK - C	S 235	NC8	1250,010	0,23	0,02	0,23
C318	TOPUKLUK - C	S 235	NC8	1249,990	0,07	0,01	0,07
C319	TOPUKLUK - C	S 235	NC8	1249,990	0,06	0,01	0,06
C320	TOPUKLUK - C	S 235	NC8	1249,990	0,06	0,01	0,06
C321	TOPUKLUK - C	S 235	NC8	1249,990	0,14	0,01	0,14
C322	TOPUKLUK - C	S 235	NC8	1250,010	0,14	0,01	0,14
C323	TOPUKLUK - C	S 235	NC8	1250,010	0,06	0,01	0,06
C324	TOPUKLUK - C	S 235	NC8	1250,010	0,06	0,01	0,06
C325	TOPUKLUK - C	S 235	NC8	1250,010	0,07	0,01	0,07
C326	TOPUKLUK - C	S 235	NC8	1249,990	0,23	0,02	0,23
CP230	DIYAGONAL - CHS	S 235	NC8	2957,431	0,09	0,09	0,00
CP231	DIYAGONAL - CHS	S 235	NC8	2957,431	0,09	0,09	0,00
CP232	DIYAGONAL - CHS	S 235	NC8	2957,431	0,10	0,10	0,00
CP233	DIYAGONAL - CHS	S 235	NC8	2957,431	0,10	0,10	0,00
CP234	DIYAGONAL - CHS	S 235	NC8	2957,431	0,09	0,09	0,00
CP235	DIYAGONAL - CHS	S 235	NC8	2957,431	0,09	0,09	0,00
B1942	DIKME - CFCHS48.3X3	S 235	NC8	110,000	0,31	0,31	0,00
B1943	DİKME - CFCHS48.3X3	S 235	NC8	2000,000	0,27	0,27	0,00
B1944	DİKME - CFCHS48.3X3	S 235	NC8	110,000	0,43	0,43	0,00
B1945	DİKME - CFCHS48.3X3	S 235	NC8	0,000	0,35	0,35	0,00
B1946	DİKME - CFCHS48.3X3	S 235	NC8	110,000	0,40	0,40	0,00
B1947	DİKME - CFCHS48.3X3	S 235	NC8	0,000	0,37	0,37	0,00
B1948	DİKME - CFCHS48.3X3	S 235	NC8	110,000	0,42	0,42	0,00
B1949	DİKME - CFCHS48.3X3	S 235	NC8	0,000	0,39	0,39	0,00
B1950	DIKME - CFCHS48.3X3	S 235	NC8	110,000	0,44	0,44	0,00
B1951	DİKME - CFCHS48.3X3	S 235	NC8	0,000	0,40	0,40	0,00
B1952	DIKME - CFCHS48.3X3	S 235	NC8	110,000	0,51	0,51	0,00
B1953	DİKME - CFCHS48.3X3	S 235	NC8	0,000	0,41	0,41	0,00
B1954	DİKME - CFCHS48.3X3	S 235	NC8	110,000	0,44	0,44	0,00
B1955	DİKME - CFCHS48.3X3	S 235	NC8	0,000	0,40	0,40	0,00
B1956	DIKME - CFCHS48.3X3	S 235	NC8	110,000	0,42	0,42	0,00
B1957	DİKME - CFCHS48.3X3	S 235	NC8	0,000	0,39	0,39	0,00
B1958	ALT_PROFIL - RHS	S 235	NC8	200,000	0,18	0,08	0,18
B1959	ALT_PROFIL - RHS	S 235	NC8	200,000	0,20	0,11	0,20
B1960	ALT_PROFIL - RHS	S 235	NC8	200,000	0,20	0,12	0,20
B1961	ALT_PROFIL - RHS	S 235	NC8	200,000	0,20	0,13	0,20
B1962	ALT_PROFIL - RHS	S 235	NC8	700,000	0,20	0,19	0,20
B1963	ALT_PROFIL - RHS	S 235	NC8	200,000	0,19	0,13	0,19
B1964	ALT_PROFIL - RHS	S 235	NC8	700,000	0,20	0,19	0,20
B1965	ALT_PROFIL - RHS	S 235	NC8	200,000	0,20	0,13	0,20
B1966	DİKME - CFCHS48.3X3	S 235	NC8	110,000	0,40	0,40	0,00
B1967	DİKME - CFCHS48.3X3	S 235	NC8	0,000	0,37	0,37	0,00
B1968	ALT_PROFIL - RHS	S 235	NC8	200,000	0,20	0,12	0,20
B1969	DİKME - CFCHS48.3X3	S 235	NC8	110,000	0,43	0,43	0,00
B1970	DİKME - CFCHS48.3X3	S 235	NC8	0,000	0,35	0,35	0,00
B1971	ALT_PROFIL - RHS	S 235	NC8	200,000	0,20	0,11	0,20
B1972	DİKME - CFCHS48.3X3	S 235	NC8	110,000	0,31	0,31	0,00
B1973	DIKME - CFCHS48.3X3	S 235	NC8	2000,000	0,27	0,27	0,00
B1974	ALT_PROFIL - RHS	S 235	NC8	200,000	0,18	0,08	0,18
B1975	ÜST_PROFIL - RHS	S 235	NC8	700,000	0,12	0,09	0,12
B1976	ÜST_PROFIL - RHS	S 235	NC8	0,000	0,13	0,11	0,13
B1977	ÜST_PROFIL - RHS	S 235	NC8	700,000	0,11	0,09	0,11
B1978	ÜST_PROFIL - RHS	S 235	NC8	700,000	0,12	0,10	0,12
B1979	ÜST_PROFIL - RHS	S 235	NC8	700,000	0,13	0,11	0,13
B1980	ÜST_PROFIL - RHS	S 235	NC8	0,000	0,16	0,14	0,16

Member	css	mat	Case	dx [mm]	un.check [-]	sec.check [-]	stab.check [-]
B1981	ÜST_PROFIL - RHS	S 235	NC8	700,000	0,13	0,11	0,13
B1982	ÜST_PROFIL - RHS	S 235	NC8	700,000	0,12	0,10	0,12
B1983	ÜST_PROFIL - RHS	S 235	NC8	700,000	0,11	0,09	0,11
B1984	ÜST_PROFIL - RHS	S 235	NC8	0,000	0,13	0,11	0,13
B1985	ÜST_PROFIL - RHS	S 235	NC8	700,000	0,12	0,09	0,12
B1986	YATAY - CHS	S 235	NC8	1249,990	0,08	0,08	0,00
B1987	YATAY - CHS	S 235	NC8	1249,990	0,08	0,08	0,00
B1988	YATAY - CHS	S 235	NC8	1249,990	0,08	0,08	0,00
B1989	YATAY - CHS	S 235	NC8	1249,990	0,08	0,08	0,00
B1990	YATAY - CHS	S 235	NC8	1249,990	0,08	0,08	0,00
B1991	YATAY - CHS	S 235	NC8	1249,990	0,08	0,08	0,00
B1992	YATAY - CHS	S 235	NC8	1249,990	0,08	0,08	0,00
B1993	YATAY - CHS	S 235	NC8	1249,990	0,08	0,08	0,00
B1994	YATAY - CHS	S 235	NC8	1249,990	0,08	0,08	0,00
B1995	YATAY - CHS	S 235	NC8	1249,990	0,08	0,08	0,00
B1996	YATAY - CHS	S 235	NC8	1249,990	0,08	0,08	0,00
B1997	YATAY - CHS	S 235	NC8	1249,990	0,08	0,08	0,00
B1998	YATAY - CHS	S 235	NC8	1249,990	0,08	0,08	0,00
B1999	YATAY - CHS	S 235	NC8	1249,990	0,08	0,08	0,00
B2000	YATAY - CHS	S 235	NC8	1249,990	0,08	0,08	0,00
B2001	YATAY - CHS	S 235	NC8	1249,990	0,08	0,08	0,00
B2002	YATAY - CHS	S 235	NC8	1249,990	0,08	0,08	0,00
B2003	YATAY - CHS	S 235	NC8	1249,990	0,08	0,08	0,00
B2004	YATAY - CHS	S 235	NC8	1249,990	0,08	0,08	0,00
B2005	YATAY - CHS	S 235	NC8	1249,990	0,08	0,08	0,00
PL521	Platform - General cross-section	S 235	NC8	1562,500	0,03	0,03	0,03
PL522	Platform - General cross-section	S 235	NC8	2500,000	0,04	0,01	0,04
PL523	Platform - General cross-section	S 235	NC8	1249,990	0,04	0,04	0,04
PL524	Platform - General cross-section	S 235	NC8	2500,000	0,04	0,01	0,04
PL525	Platform - General cross-section	S 235	NC8	1249,990	0,03	0,03	0,03
PL526	Platform - General cross-section	S 235	NC8	2500,000	0,04	0,01	0,04
PL527	Platform - General cross-section	S 235	NC8	1249,990	0,03	0,03	0,03
PL528	Platform - General cross-section	S 235	NC8	2500,000	0,04	0,01	0,04
PL529	Platform - General cross-section	S 235	NC8	1250,010	0,03	0,03	0,03
PL530	Platform - General cross-section	S 235	NC8	1562,500	0,04	0,03	0,04
PL531	Platform - General cross-section	S 235	NC8	1249,990	0,03	0,03	0,03
PL532	Platform - General cross-section	S 235	NC8	1249,990	0,04	0,04	0,04
PL533	Platform - General cross-section	S 235	NC8	1250,010	0,03	0,03	0,03
PL534	Platform - General cross-section	S 235	NC8	1250,010	0,04	0,03	0,04
PL535	Platform - General cross-section	S 235	NC8	1406,250	0,03	0,03	0,03
PL536	Platform - General cross-section	S 235	NC8	1250,010	0,04	0,04	0,04
PL537	Platform - General cross-section	S 235	NC8	1250,010	0,04	0,04	0,04
PL538	Platform - General cross-section	S 235	NC8	1250,010	0,04	0,04	0,04
PL539	Platform - General cross-section	S 235	NC8	937,500	0,03	0,03	0,03
PL540	Platform - General cross-section	S 235	NC8	1249,990	0,04	0,04	0,04
C327	TOPUKLUK - C	S 235	NC7	1249,990	0,16	0,01	0,16
C328	TOPUKLUK - C	S 235	NC8	1250,010	0,06	0,01	0,06
C329	TOPUKLUK - C	S 235	NC8	1249,990	0,06	0,01	0,06
C330	TOPUKLUK - C	S 235	NC8	1250,010	0,06	0,01	0,06
C331	TOPUKLUK - C	S 235	NC8	1249,990	0,06	0,01	0,06
C332	TOPUKLUK - C	S 235	NC8	1250,010	0,06	0,01	0,06
C333	TOPUKLUK - C	S 235	NC8	1249,990	0,06	0,01	0,06
C334	TOPUKLUK - C	S 235	NC8	1250,010	0,06	0,01	0,06
C335	TOPUKLUK - C	S 235	NC8	1249,990	0,06	0,01	0,06
C336	TOPUKLUK - C	S 235	NC4	1249,990	0,15	0,01	0,15
CP236	DIYAGONAL - CHS	S 235	NC8	0,000	0,11	0,11	0,00
CP237	DIYAGONAL - CHS	S 235	NC8	0,000	0,13	0,13	0,00
CP238	DIYAGONAL - CHS	S 235	NC8	0,000	0,14	0,14	0,00
CP239	DIYAGONAL - CHS	S 235	NC8	0,000	0,14	0,14	0,00
CP240	DIYAGONAL - CHS	S 235	NC8	0,000	0,13	0,13	0,00
CP241	DIYAGONAL - CHS	S 235	NC8	0,000	0,11	0,11	0,00
B2006	DİKME - CFCHS48.3X3	S 235	NC8	2000,000	0,28	0,28	0,00
B2007	DİKME - CFCHS48.3X3	S 235	NC8	110,000	0,22	0,22	0,00
B2008	DİKME - CFCHS48.3X3	S 235	NC8	2000,000	0,34	0,34	0,00
B2009	DİKME - CFCHS48.3X3	S 235	NC8	110,000	0,29	0,29	0,00
B2010	DİKME - CFCHS48.3X3	S 235	NC8	2000,000	0,39	0,39	0,00
B2011	DIKME - CFCHS48.3X3	S 235	NC8	110,000	0,32	0,32	0,00
B2012	DİKME - CFCHS48.3X3	S 235	NC8	2000,000	0,39	0,39	0,00
B2013	DIKME - CFCHS48.3X3	S 235	NC8	110,000	0,34	0,34	0,00
B2014	DİKME - CFCHS48.3X3	S 235	NC8	2000,000	0,42	0,42	0,00
B2015	DİKME - CFCHS48.3X3	S 235	NC8	110,000	0,34	0,34	0,00
B2016	DİKME - CFCHS48.3X3	S 235	NC8	2000,000	0,40	0,40	0,00
B2017	DİKME - CFCHS48.3X3	S 235	NC8	110,000	0,35	0,35	0,00
B2018	DİKME - CFCHS48.3X3	S 235	NC8	2000,000	0,42	0,42	0,00
B2019	DIKME - CFCHS48.3X3	S 235	NC8	110,000	0,34	0,34	0,00
B2020	DİKME - CFCHS48.3X3	S 235	NC8	2000,000	0,39	0,39	0,00

Member	css	mat	Case	dx [mm]	un.check [-]	sec.check [-]	stab.check [-]
B2021	DİKME - CFCHS48.3X3	S 235	NC8	110,000	0,34	0,34	0,00
B2022	ALT_PROFIL - RHS	S 235	NC8	0,000	0,13	0,10	0,13
B2023	ALT_PROFIL - RHS	S 235	NC8	500,000	0,20	0,07	0,20
B2024	ALT_PROFIL - RHS	S 235	NC8	500,000	0,23	0,08	0,23
B2025	ALT_PROFIL - RHS	S 235	NC8	500,000	0,22	0,09	0,22
B2026	ALT_PROFIL - RHS	S 235	NC8	500,000	0,23	0,09	0,23
B2027	ALT_PROFIL - RHS	S 235	NC8	500,000	0,20	0,08	0,20
B2028	ALT_PROFIL - RHS	S 235	NC8	500,000	0,23	0,09	0,23
B2029	ALT_PROFIL - RHS	S 235	NC8	500,000	0,22	0,09	0,22
B2030	DİKME - CFCHS48.3X3	S 235	NC8	2000,000	0,39	0,39	0,00
B2031	DIKME - CFCHS48.3X3	S 235	NC8	110,000	0,32	0,32	0,00
B2032	ALT_PROFIL - RHS	S 235	NC8	500,000	0,23	0,08	0,23
B2033	DİKME - CFCHS48.3X3	S 235	NC8	2000,000	0,34	0,34	0,00
B2034	DİKME - CFCHS48.3X3	S 235	NC8	110,000	0,30	0,30	0,00
B2035	ALT_PROFIL - RHS	S 235	NC8	500,000	0,20	0,08	0,20
B2036	DİKME - CFCHS48.3X3	S 235	NC8	2000,000	0,28	0,28	0,00
B2037	DİKME - CFCHS48.3X3	S 235	NC8	110,000	0,22	0,22	0,00
B2038	ALT_PROFIL - RHS	S 235	NC8	0,000	0,13	0,10	0,13
B2039	ÜST_PROFIL - RHS	S 235	NC8	700,000	0,06	0,05	0,06
B2040	ÜST_PROFIL - RHS	S 235	NC8	700,000	0,10	0,09	0,10
B2041	ÜST_PROFIL - RHS	S 235	NC8	700,000	0,10	0,09	0,10
B2042	ÜST_PROFIL - RHS	S 235	NC8	700,000	0,10	0,10	0,10
B2043	ÜST_PROFIL - RHS	S 235	NC8	700,000	0,10	0,09	0,10
B2044	ÜST_PROFIL - RHS	S 235	NC8	700,000	0,11	0,10	0,11
B2045	ÜST_PROFIL - RHS	S 235	NC8	700,000	0,10	0,09	0,10
B2046	ÜST_PROFIL - RHS	S 235	NC8	700,000	0,10	0,10	0,10
B2047	ÜST_PROFIL - RHS	S 235	NC8	700,000	0,10	0,09	0,10
B2048	ÜST_PROFIL - RHS	S 235	NC8	700,000	0,10	0,09	0,10
B2049	ÜST_PROFIL - RHS	S 235	NC8	700,000	0,06	0,05	0,06
B2050	YATAY - CHS	S 235	NC8	1250,010	0,08	0,08	0,00
B2051	YATAY - CHS	S 235	NC8	1249,990	0,08	0,08	0,00
B2052	YATAY - CHS	S 235	NC8	1249,990	0,08	0,08	0,00
B2053	YATAY - CHS	S 235	NC8	1249,990	0,08	0,08	0,00
B2054	YATAY - CHS	S 235	NC8	1249,990	0,08	0,08	0,00
B2055	YATAY - CHS	S 235	NC8	1249,990	0,08	0,08	0,00
B2056	YATAY - CHS	S 235	NC8	1249,990	0,08	0,08	0,00
B2057	YATAY - CHS	S 235	NC8	1249,990	0,08	0,08	0,00
B2058	YATAY - CHS	S 235	NC8	1249,990	0,08	0,08	0,00
B2059	YATAY - CHS	S 235	NC8	1249,990	0,08	0,08	0,00
B2060	YATAY - CHS	S 235	NC8	1249,990	0,08	0,08	0,00
B2061	YATAY - CHS	S 235	NC8	1249,990	0,08	0,08	0,00
B2062	YATAY - CHS	S 235	NC8	1249,990	0,08	0,08	0,00
B2063	YATAY - CHS	S 235	NC8	1249,990	0,08	0,08	0,00
B2064	YATAY - CHS	S 235	NC8	1249,990	0,08	0,08	0,00
B2065	YATAY - CHS	S 235	NC8	1249,990	0,08	0,08	0,00
B2066	YATAY - CHS	S 235	NC8	1249,990	0,08	0,08	0,00
B2067	YATAY - CHS	S 235	NC8	1249,990	0,08	0,08	0,00
B2068	YATAY - CHS	S 235	NC8	1249,990	0,08	0,08	0,00
B2069	YATAY - CHS	S 235	NC8	1249,990	0,08	0,08	0,00
PL541	Platform - General cross-section	S 235	NC7	1249,990	0,02	0,02	0,02
PL542	Platform - General cross-section	S 235	NC8	1093,750	0,03	0,03	0,03
PL543	Platform - General cross-section	S 235	NC7	1249,990	0,02	0,02	0,02
PL544	Platform - General cross-section	S 235	NC1	1250,010	0,03	0,03	0,03
PL545	Platform - General cross-section	S 235	NC8	1249,990	0,02	0,02	0,02
PL546	Platform - General cross-section	S 235	NC8	2500,000	0,03	0,01	0,03
PL547	Platform - General cross-section	S 235	NC8	1250,010	0,02	0,02	0,02
PL548	Platform - General cross-section	S 235	NC8	1562,500	0,03	0,03	0,03
PL549	Platform - General cross-section	S 235	NC7	2500,000	0,02	0,00	0,02
PL550	Platform - General cross-section	S 235	NC8	2500,000	0,04	0,01	0,04
PL551	Platform - General cross-section	S 235	NC7	1250,010	0,02	0,02	0,02
PL552	Platform - General cross-section	S 235	NC8	1250,010	0,04	0,03	0,04
PL553	Platform - General cross-section	S 235	NC7	1250,010	0,02	0,02	0,02
PL554	Platform - General cross-section	S 235	NC8	1249,990	0,03	0,03	0,03
PL555	Platform - General cross-section	S 235	NC8	1250,010	0,02	0,02	0,02
PL556	Platform - General cross-section	S 235	NC8	1250,010	0,03	0,03	0,03
PL557	Platform - General cross-section	S 235	NC7	2500,000	0,02	0,00	0,02
PL558	Platform - General cross-section	S 235	NC8	2500,000	0,03	0,01	0,03
PL559	Platform - General cross-section	S 235	NC5	1250,010	0,02	0,02	0,02
PL560	Platform - General cross-section	S 235	NC8	1406,250	0,03	0,03	0,03
C337	TOPUKLUK - C	S 235	NC8	1250,010	0,23	0,02	0,23
C338	TOPUKLUK - C	S 235	NC8	1249,990	0,07	0,01	0,07
C339	TOPUKLUK - C	S 235	NC8	1249,990	0,06	0,01	0,06
C340	TOPUKLUK - C	S 235	NC8	1249,990	0,06	0,01	0,06
C341	TOPUKLUK - C	S 235	NC8	1249,990	0,14	0,01	0,14
C342	TOPUKLUK - C	S 235	NC8	1250,010	0,13	0,01	0,13
C343	TOPUKLUK - C	S 235	NC8	1250,010	0,06	0,01	0,06

Member	css	mat	Case	dx [mm]	un.check [-]	sec.check [-]	stab.check [-]
C344	TOPUKLUK - C	S 235	NC8	1250,010	0,06	0,01	0,06
C345	TOPUKLUK - C	S 235	NC8	1250,010	0,07	0,01	0,07
C346	TOPUKLUK - C	S 235	NC8	1249,990	0,23	0,02	0,23
CP242	DIYAGONAL - CHS	S 235	NC8	2957,431	0,09	0,09	0,00
CP243	DIYAGONAL - CHS	S 235	NC8	2957,431	0,09	0,09	0,00
CP244	DIYAGONAL - CHS	S 235	NC8	2957,431	0,10	0,10	0,00
CP245	DIYAGONAL - CHS	S 235	NC8	2957,431	0,10	0,10	0,00
CP246	DIYAGONAL - CHS	S 235	NC8	2957,431	0,09	0,09	0,00
CP247	DIYAGONAL - CHS	S 235	NC8	2957,431	0,09	0,09	0,00
B2070	DİKME - CFCHS48.3X3	S 235	NC8	110,000	0,31	0,31	0,00
B2071	DIKME - CFCHS48.3X3	S 235	NC8	2000,000	0,26	0,26	0,00
B2072	DİKME - CFCHS48.3X3	S 235	NC8	110,000	0,42	0,42	0,00
B2073	DİKME - CFCHS48.3X3	S 235	NC8	0,000	0,34	0,34	0,00
B2074	DİKME - CFCHS48.3X3	S 235	NC8	110,000	0,40	0,40	0,00
B2075	DİKME - CFCHS48.3X3	S 235	NC8	0,000	0,36	0,36	0,00
B2076	DİKME - CFCHS48.3X3	S 235	NC8	110,000	0,41	0,41	0,00
B2077	DİKME - CFCHS48.3X3	S 235	NC8	0,000	0,38	0,38	0,00
B2078	DİKME - CFCHS48.3X3	S 235	NC8	110,000	0,43	0,43	0,00
B2079	DİKME - CFCHS48.3X3	S 235	NC8	0,000	0,39	0,39	0,00
B2080	DİKME - CFCHS48.3X3	S 235	NC8	110,000	0,50	0,50	0,00
B2081	DIKME - CFCHS48.3X3	S 235	NC8	0,000	0,40	0,40	0,00
B2082	DİKME - CFCHS48.3X3	S 235	NC8	110,000	0,43	0,43	0,00
B2083	DIKME - CFCHS48.3X3	S 235	NC8	0,000	0,39	0,39	0,00
B2084	DİKME - CFCHS48.3X3	S 235	NC8	110,000	0,41	0,41	0,00
B2085	DİKME - CFCHS48.3X3	S 235	NC8	0,000	0,38	0,38	0,00
B2086	ALT_PROFIL - RHS	S 235	NC8	200,000	0,17	0,08	0,17
B2087	ALT_PROFIL - RHS	S 235	NC8	200,000	0,19	0,11	0,19
B2088	ALT_PROFIL - RHS	S 235	NC8	200,000	0,20	0,12	0,20
B2089	ALT_PROFIL - RHS	S 235	NC8	200,000	0,19	0,13	0,19
B2090	ALT_PROFIL - RHS	S 235	NC8	700,000	0,20	0,19	0,20
B2091	ALT_PROFIL - RHS	S 235	NC8	200,000	0,18	0,13	0,18
B2092	ALT_PROFIL - RHS	S 235	NC8	700,000	0,20	0,19	0,20
B2093	ALT_PROFIL - RHS	S 235	NC8	200,000	0,19	0,13	0,19
B2094	DİKME - CFCHS48.3X3	S 235	NC8	110,000	0,40	0,40	0,00
B2095	DİKME - CFCHS48.3X3	S 235	NC8	0,000	0,36	0,36	0,00
B2096	ALT_PROFIL - RHS	S 235	NC8	200,000	0,20	0,12	0,20
B2097	DİKME - CFCHS48.3X3	S 235	NC8	110,000	0,42	0,42	0,00
B2098	DIKME - CFCHS48.3X3	S 235	NC8	0,000	0,34	0,34	0,00
B2099	ALT_PROFIL - RHS	S 235	NC8	200,000	0,20	0,11	0,20
B2100	DİKME - CFCHS48.3X3	S 235	NC8	110,000	0,31	0,31	0,00
B2101	DİKME - CFCHS48.3X3	S 235	NC8	2000,000	0,26	0,26	0,00
B2102	ALT_PROFIL - RHS	S 235	NC8	200,000	0,18	0,08	0,18
B2103	ÜST_PROFIL - RHS	S 235	NC8	700,000	0,12	0,09	0,12
B2104	ÜST_PROFIL - RHS	S 235	NC8	0,000	0,13	0,11	0,13
B2105	ÜST_PROFIL - RHS	S 235	NC8	700,000	0,11	0,09	0,11
B2106	ÜST_PROFIL - RHS	S 235	NC8	700,000	0,12	0,10	0,12
B2107	ÜST_PROFIL - RHS	S 235	NC8	700,000	0,13	0,11	0,13
B2108	ÜST_PROFIL - RHS	S 235	NC8	0,000	0,16	0,14	0,16
B2109	ÜST_PROFIL - RHS	S 235	NC8	700,000	0,13	0,11	0,13
B2110	ÜST_PROFIL - RHS	S 235	NC8	700,000	0,12	0,10	0,12
B2111	ÜST_PROFIL - RHS	S 235	NC8	700,000	0,11	0,09	0,11
B2112	ÜST_PROFIL - RHS	S 235	NC8	0,000	0,13	0,11	0,13
B2113	ÜST_PROFIL - RHS	S 235	NC8	700,000	0,12	0,10	0,12
B2114	YATAY - CHS	S 235	NC8	1249,990	0,08	0,08	0,00
B2115	YATAY - CHS	S 235	NC8	1249,990	0,08	0,08	0,00
B2116	YATAY - CHS	S 235	NC8	1249,990	0,08	0,08	0,00
B2117	YATAY - CHS	S 235	NC8	1249,990	0,08	0,08	0,00
B2118	YATAY - CHS	S 235	NC8	1249,990	0,08	0,08	0,00
B2119	YATAY - CHS	S 235	NC8	1249,990	0,08	0,08	0,00
B2120	YATAY - CHS	S 235	NC8	1249,990	0,08	0,08	0,00
B2121	YATAY - CHS	S 235	NC8	1249,990	0,08	0,08	0,00
B2122	YATAY - CHS	S 235	NC8	1249,990	0,08	0,08	0,00
B2123	YATAY - CHS	S 235	NC8	1249,990	0,08	0,08	0,00
B2124	YATAY - CHS	S 235	NC8	1249,990	0,08	0,08	0,00
B2125	YATAY - CHS	S 235	NC8	1249,990	0,08	0,08	0,00
B2126	YATAY - CHS	S 235	NC8	1249,990	0,08	0,08	0,00
B2127	YATAY - CHS	S 235	NC8	1249,990	0,08	0,08	0,00
B2128	YATAY - CHS	S 235	NC8	1249,990	0,08	0,08	0,00
B2129	YATAY - CHS	S 235	NC8	1249,990	0,08	0,08	0,00
B2130	YATAY - CHS	S 235	NC8	1249,990	0,08	0,08	0,00
B2131	YATAY - CHS	S 235	NC8	1249,990	0,08	0,08	0,00
B2132	YATAY - CHS	S 235	NC8	1249,990	0,08	0,08	0,00
B2133	YATAY - CHS	S 235	NC8	1249,990	0,08	0,08	0,00
PL561	Platform - General cross-section	S 235	NC8	1562,500	0,03	0,03	0,03
PL562	Platform - General cross-section	S 235	NC8	2500,000	0,04	0,01	0,04
PL563	Platform - General cross-section	S 235	NC8	1249,990	0,04	0,04	0,04

Member	css	mat	Case	dx [mm]	un.check [-]	sec.check [-]	stab.check [-]
PL564	Platform - General cross-section	S 235	NC8	2500,000	0,04	0,01	0,04
PL565	Platform - General cross-section	S 235	NC8	1093,750	0,03	0,03	0,03
PL566	Platform - General cross-section	S 235	NC8	2500,000	0,04	0,01	0,04
PL567	Platform - General cross-section	S 235	NC8	1249,990	0,03	0,03	0,03
PL568	Platform - General cross-section	S 235	NC8	2500,000	0,04	0,01	0,04
PL569	Platform - General cross-section	S 235	NC8	1250,010	0,03	0,03	0,03
PL570	Platform - General cross-section	S 235	NC8	1562,500	0,04	0,03	0,04
PL571	Platform - General cross-section	S 235	NC8	1249,990	0,03	0,03	0,03
PL572	Platform - General cross-section	S 235	NC8	1249,990	0,04	0,03	0,04
PL573	Platform - General cross-section	S 235	NC8	1250,010	0,03	0,03	0,03
PL574	Platform - General cross-section	S 235	NC8	1250,010	0,04	0,03	0,04
PL575	Platform - General cross-section	S 235	NC8	1406,250	0,03	0,03	0,03
PL576	Platform - General cross-section	S 235	NC8	1250,010	0,04	0,04	0,04
PL577	Platform - General cross-section	S 235	NC8	1250,010	0,04	0,04	0,04
PL578	Platform - General cross-section	S 235	NC8	1250,010	0,04	0,04	0,04
PL579	Platform - General cross-section	S 235	NC8	937,500	0,03	0,03	0,03
PL580	Platform - General cross-section	S 235	NC8	1249,990	0,04	0,04	0,04
C347	TOPUKLUK - C	S 235	NC7	1249,990	0,16	0,01	0,16
C348	TOPUKLUK - C	S 235	NC8	1250,010	0,06	0,01	0,06
C349	TOPUKLUK - C	S 235	NC8	1249,990	0,06	0,01	0,06
C350	TOPUKLUK - C	S 235	NC8	1250,010	0,06	0,01	0,06
C351	TOPUKLUK - C	S 235	NC8	1249,990	0,06	0,01	0,06
C352	TOPUKLUK - C	S 235	NC8	1250,010	0,06	0,01	0,06
C353	TOPUKLUK - C	S 235	NC8	1249,990	0,06	0,01	0,06
C354	TOPUKLUK - C	S 235	NC8	1250,010	0,06	0,01	0,06
C355	TOPUKLUK - C	S 235	NC8	1249,990	0,06	0,01	0,06
C356	TOPUKLUK - C	S 235	NC4	1249,990	0,15	0,01	0,15
CP248	DIYAGONAL - CHS	S 235	NC8	0,000	0,11	0,11	0,00
CP249	DIYAGONAL - CHS	S 235	NC8	0,000	0,13	0,13	0,00
CP250	DIYAGONAL - CHS	S 235	NC8	0,000	0,13	0,13	0,00
CP251	DIYAGONAL - CHS	S 235	NC8	0,000	0,13	0,13	0,00
CP252	DIYAGONAL - CHS	S 235	NC8	0,000	0,13	0,13	0,00
CP253	DIYAGONAL - CHS	S 235	NC8	0,000	0,11	0,11	0,00
B2134	DİKME - CFCHS48.3X3	S 235	NC8	2000,000	0,28	0,28	0,00
B2135	DİKME - CFCHS48.3X3	S 235	NC8	110,000	0,22	0,22	0,00
B2136	DİKME - CFCHS48.3X3	S 235	NC8	2000,000	0,34	0,34	0,00
B2137	DİKME - CFCHS48.3X3	S 235	NC8	110,000	0,29	0,29	0,00
B2138	DIKME - CFCHS48.3X3	S 235	NC8	2000,000	0,38	0,38	0,00
B2139	DİKME - CFCHS48.3X3	S 235	NC8	110,000	0,31	0,31	0,00
B2140	DİKME - CFCHS48.3X3	S 235	NC8	2000,000	0,38	0,38	0,00
B2141	DİKME - CFCHS48.3X3	S 235	NC8	110,000	0,33	0,33	0,00
B2142	DİKME - CFCHS48.3X3	S 235	NC8	2000,000	0,41	0,41	0,00
B2143	DİKME - CFCHS48.3X3	S 235	NC8	110,000	0,34	0,34	0,00
B2144	DİKME - CFCHS48.3X3	S 235	NC8	2000,000	0,40	0,40	0,00
B2145	DİKME - CFCHS48.3X3	S 235	NC8	110,000	0,35	0,35	0,00
B2146	DIKME - CFCHS48.3X3	S 235	NC8	2000,000	0,41	0,41	0,00
B2147	DİKME - CFCHS48.3X3	S 235	NC8	110,000	0,34	0,34	0,00
B2148	DIKME - CFCHS48.3X3	S 235	NC8	2000,000	0,38	0,38	0,00
B2149	DİKME - CFCHS48.3X3	S 235	NC8	110,000	0,33	0,33	0,00
B2150	ALT_PROFIL - RHS	S 235	NC8	0,000	0,12	0,10	0,12
B2151	ALT_PROFIL - RHS	S 235	NC8	500,000	0,20	0,07	0,20
B2152	ALT_PROFIL - RHS	S 235	NC8	500,000	0,23	0,08	0,23
B2153	ALT_PROFIL - RHS	S 235	NC8	500,000	0,22	0,09	0,22
B2154	ALT_PROFIL - RHS	S 235	NC8	500,000	0,23	0,08	0,23
B2155	ALT_PROFIL - RHS	S 235	NC8	500,000	0,20	0,08	0,20
B2156	ALT_PROFIL - RHS	S 235	NC8	500,000	0,23	0,08	0,23
B2157	ALT_PROFIL - RHS	S 235	NC8	500,000	0,22	0,09	0,22
B2158	DİKME - CFCHS48.3X3	S 235	NC8	2000,000	0,38	0,38	0,00
B2159	DİKME - CFCHS48.3X3	S 235	NC8	110,000	0,31	0,31	0,00
B2160	ALT_PROFIL - RHS	S 235	NC8	500,000	0,23	0,08	0,23
B2161	DIKME - CFCHS48.3X3	S 235	NC8	2000,000	0,34	0,34	0,00
B2162	DİKME - CFCHS48.3X3	S 235	NC8	110,000	0,29	0,29	0,00
B2163	ALT_PROFIL - RHS	S 235	NC8	500,000	0,20	0,08	0,20
B2164	DİKME - CFCHS48.3X3	S 235	NC8	2000,000	0,28	0,28	0,00
B2165	DİKME - CFCHS48.3X3	S 235	NC8	110,000	0,22	0,22	0,00
B2166	ALT_PROFIL - RHS	S 235	NC8	0,000	0,12	0,10	0,12
B2167	ÜST_PROFIL - RHS	S 235	NC8	700,000	0,06	0,05	0,06
B2168	ÜST_PROFIL - RHS	S 235	NC8	700,000	0,10	0,09	0,10
B2169	ÜST_PROFIL - RHS	S 235	NC8	700,000	0,10	0,09	0,10
B2170	ÜST_PROFIL - RHS	S 235	NC8	700,000	0,10	0,09	0,10
B2171	ÜST_PROFIL - RHS	S 235	NC8	700,000	0,10	0,09	0,10
B2172	ÜST_PROFIL - RHS	S 235	NC8	700,000	0,11	0,10	0,11
B2173	ÜST_PROFIL - RHS	S 235	NC8	700,000	0,10	0,09	0,10
B2174	ÜST_PROFIL - RHS	S 235	NC8	700,000	0,10	0,09	0,10
B2175	ÜST_PROFIL - RHS	S 235	NC8	700,000	0,10	0,09	0,10
B2176	ÜST_PROFIL - RHS	S 235	NC8	700,000	0,10	0,09	0,10

Member	css	mat	Case	dx [mm]	un.check [-]	sec.check [-]	stab.check [-]
B2177	ÜST_PROFIL - RHS	S 235	NC8	700,000	0,06	0,05	0,06
B2178	YATAY - CHS	S 235	NC8	1249,990	0,08	0,08	0,00
B2179	YATAY - CHS	S 235	NC8	1249,990	0,08	0,08	0,00
B2180	YATAY - CHS	S 235	NC8	1249,990	0,08	0,08	0,00
B2181	YATAY - CHS	S 235	NC8	1249,990	0,08	0,08	0,00
B2182	YATAY - CHS	S 235	NC8	1249,990	0,08	0,08	0,00
B2183	YATAY - CHS	S 235	NC8	1249,990	0,08	0,08	0,00
B2184	YATAY - CHS	S 235	NC8	1249,990	0,08	0,08	0,00
B2185	YATAY - CHS	S 235	NC8	1249,990	0,08	0,08	0,00
B2186	YATAY - CHS	S 235	NC8	1249,990	0,08	0,08	0,00
B2187	YATAY - CHS	S 235	NC8	1249,990	0,08	0,08	0,00
B2188	YATAY - CHS	S 235	NC8	1249,990	0,08	0,08	0,00
B2189	YATAY - CHS	S 235	NC8	1249,990	0,08	0,08	0,00
B2190	YATAY - CHS	S 235	NC8	1249,990	0,08	0,08	0,00
B2191	YATAY - CHS	S 235	NC8	1249,990	0,08	0,08	0,00
B2192	YATAY - CHS	S 235	NC8	1249,990	0,08	0,08	0,00
B2193	YATAY - CHS	S 235	NC8	1249,990	0,08	0,08	0,00
B2194	YATAY - CHS	S 235	NC8	1249,990	0,08	0,08	0,00
B2195	YATAY - CHS	S 235	NC8	1249,990	0,08	0,08	0,00
B2196	YATAY - CHS	S 235	NC8	1249,990	0,08	0,08	0,00
B2197	YATAY - CHS	S 235	NC8	1249,990	0,08	0,08	0,00
PL581	Platform - General cross-section	S 235	NC7	1249,990	0,02	0,02	0,02
PL582	Platform - General cross-section	S 235	NC8	1093,750	0,03	0,03	0,03
PL583	Platform - General cross-section	S 235	NC7	1249,990	0,02	0,02	0,02
PL584	Platform - General cross-section	S 235	NC8	1250,010	0,03	0,03	0,03
PL585	Platform - General cross-section	S 235	NC8	1249,990	0,02	0,02	0,02
PL586	Platform - General cross-section	S 235	NC8	2500,000	0,03	0,01	0,03
PL587	Platform - General cross-section	S 235	NC8	1250,010	0,02	0,02	0,02
PL588	Platform - General cross-section	S 235	NC8	1562,500	0,03	0,03	0,03
PL589	Platform - General cross-section	S 235	NC7	2500,000	0,02	0,00	0,02
PL590	Platform - General cross-section	S 235	NC8	2500,000	0,04	0,01	0,04
PL591	Platform - General cross-section	S 235	NC7	1250,010	0,02	0,02	0,02
PL592	Platform - General cross-section	S 235	NC8	1250,010	0,04	0,03	0,04
PL593	Platform - General cross-section	S 235	NC7	1250,010	0,02	0,02	0,02
PL594	Platform - General cross-section	S 235	NC8	1249,990	0,03	0,03	0,03
PL595	Platform - General cross-section	S 235	NC8	1250,010	0,02	0,02	0,02
PL596	Platform - General cross-section	S 235	NC8	1250,010	0,03	0,03	0,03
PL597	Platform - General cross-section	S 235	NC7	2343,750	0,02	0,01	0,02
PL598	Platform - General cross-section	S 235	NC8	2500,000	0,03	0,01	0,03
PL599	Platform - General cross-section	S 235	NC5	1249,990	0,02	0,02	0,02
PL600	Platform - General cross-section	S 235	NC8	1406,250	0,03	0,03	0,03
C357	TOPUKLUK - C	S 235	NC8	1250,010	0,24	0,02	0,24
C358	TOPUKLUK - C	S 235	NC8	1249,990	0,07	0,01	0,07
C359	TOPUKLUK - C	S 235	NC8	1249,990	0,06	0,01	0,06
C360	TOPUKLUK - C	S 235	NC8	1249,990	0,06	0,01	0,06
C361	TOPUKLUK - C	S 235	NC8	1249,990	0,13	0,01	0,13
C362	TOPUKLUK - C	S 235	NC8	1250,010	0,13	0,01	0,13
C363	TOPUKLUK - C	S 235	NC8	1250,010	0,06	0,01	0,06
C364	TOPUKLUK - C	S 235	NC8	1250,010	0,06	0,01	0,06
C365	TOPUKLUK - C	S 235	NC8	1250,010	0,07	0,01	0,07
C366	TOPUKLUK - C	S 235	NC8	1249,990	0,23	0,02	0,23
CP254	DIYAGONAL - CHS	S 235	NC8	2957,431	0,09	0,09	0,00
CP255	DIYAGONAL - CHS	S 235	NC8	2957,431	0,09	0,09	0,00
CP256	DIYAGONAL - CHS	S 235	NC8	2957,431	0,09	0,09	0,00
CP257	DIYAGONAL - CHS	S 235	NC8	2957,431	0,09	0,09	0,00
CP258	DIYAGONAL - CHS	S 235	NC8	2957,431	0,09	0,09	0,00
CP259	DIYAGONAL - CHS	S 235	NC8	2957,431	0,08	0,08	0,00
B2198	DİKME - CFCHS48.3X3	S 235	NC8	110,000	0,30	0,30	0,00
B2199	DİKME - CFCHS48.3X3	S 235	NC8	2000,000	0,26	0,26	0,00
B2200	DİKME - CFCHS48.3X3	S 235	NC8	110,000	0,41	0,41	0,00
B2201	DIKME - CFCHS48.3X3	S 235	NC8	0,000	0,34	0,34	0,00
B2202	DİKME - CFCHS48.3X3	S 235	NC8	110,000	0,39	0,39	0,00
B2203	DİKME - CFCHS48.3X3	S 235	NC8	0,000	0,36	0,36	0,00
B2204	DİKME - CFCHS48.3X3	S 235	NC8	110,000	0,41	0,41	0,00
B2205	DİKME - CFCHS48.3X3	S 235	NC8	0,000	0,38	0,38	0,00
B2206	DİKME - CFCHS48.3X3	S 235	NC8	110,000	0,42	0,42	0,00
B2207	DIKME - CFCHS48.3X3	S 235	NC8	0,000	0,38	0,38	0,00
B2208	DİKME - CFCHS48.3X3	S 235	NC8	110,000	0,49	0,49	0,00
B2209	DIKME - CFCHS48.3X3	S 235	NC8	0,000	0,39	0,39	0,00
B2210	DİKME - CFCHS48.3X3	S 235	NC8	110,000	0,42	0,42	0,00
B2211	DİKME - CFCHS48.3X3	S 235	NC8	0,000	0,38	0,38	0,00
B2212	DİKME - CFCHS48.3X3	S 235	NC8	110,000	0,41	0,41	0,00
B2213	DİKME - CFCHS48.3X3	S 235	NC8	0,000	0,38	0,38	0,00
B2214	ALT_PROFIL - RHS	S 235	NC8	200,000	0,17	0,08	0,17
B2215	ALT_PROFIL - RHS	S 235	NC8	200,000	0,19	0,11	0,19
B2216	ALT_PROFIL - RHS	S 235	NC8	200,000	0,19	0,12	0,19

Member	css	mat	Case	dx [mm]	un.check [-]	sec.check [-]	stab.check [-]
B2217	ALT_PROFIL - RHS	S 235	NC8	200,000	0,19	0,13	0,19
B2218	ALT_PROFIL - RHS	S 235	NC8	700,000	0,20	0,19	0,20
B2219	ALT_PROFIL - RHS	S 235	NC8	200,000	0,18	0,12	0,18
B2220	ALT_PROFIL - RHS	S 235	NC8	700,000	0,20	0,19	0,20
B2221	ALT_PROFIL - RHS	S 235	NC8	200,000	0,19	0,13	0,19
B2222	DİKME - CFCHS48.3X3	S 235	NC8	110,000	0,39	0,39	0,00
B2223	DİKME - CFCHS48.3X3	S 235	NC8	0,000	0,36	0,36	0,00
B2224	ALT_PROFIL - RHS	S 235	NC8	200,000	0,19	0,12	0,19
B2225	DİKME - CFCHS48.3X3	S 235	NC8	110,000	0,41	0,41	0,00
B2226	DİKME - CFCHS48.3X3	S 235	NC8	0,000	0,34	0,34	0,00
B2227	ALT_PROFIL - RHS	S 235	NC8	200,000	0,19	0,11	0,19
B2228	DİKME - CFCHS48.3X3	S 235	NC8	110,000	0,30	0,30	0,00
B2229	DİKME - CFCHS48.3X3	S 235	NC8	2000,000	0,26	0,26	0,00
B2230	ALT_PROFIL - RHS	S 235	NC8	200,000	0,18	0,08	0,18
B2231	ÜST_PROFIL - RHS	S 235	NC8	700,000	0,12	0,09	0,12
B2232	ÜST_PROFIL - RHS	S 235	NC8	0,000	0,13	0,10	0,13
B2233	ÜST_PROFIL - RHS	S 235	NC8	700,000	0,11	0,09	0,11
B2234	ÜST_PROFIL - RHS	S 235	NC8	700,000	0,12	0,10	0,12
B2235	ÜST_PROFIL - RHS	S 235	NC8	700,000	0,13	0,11	0,13
B2236	ÜST_PROFIL - RHS	S 235	NC8	0,000	0,16	0,14	0,16
B2237	ÜST_PROFIL - RHS	S 235	NC8	700,000	0,13	0,11	0,13
B2238	ÜST_PROFIL - RHS	S 235	NC8	700,000	0,12	0,10	0,12
B2239	ÜST_PROFIL - RHS	S 235	NC8	700,000	0,11	0,09	0,11
B2240	ÜST_PROFIL - RHS	S 235	NC8	0,000	0,13	0,10	0,13
B2241	ÜST_PROFIL - RHS	S 235	NC8	700,000	0,12	0,10	0,12
B2242	YATAY - CHS	S 235	NC8	1249,990	0,08	0,08	0,00
B2243	YATAY - CHS	S 235	NC8	1249,990	0,08	0,08	0,00
B2244	YATAY - CHS	S 235	NC8	1249,990	0,08	0,08	0,00
B2245	YATAY - CHS	S 235	NC8	1249,990	0,08	0,08	0,00
B2246	YATAY - CHS	S 235	NC8	1249,990	0,08	0,08	0,00
B2247	YATAY - CHS	S 235	NC8	1249,990	0,08	0,08	0,00
B2248	YATAY - CHS	S 235	NC8	1249,990	0,08	0,08	0,00
B2249	YATAY - CHS	S 235	NC8	1249,990	0,08	0,08	0,00
B2250	YATAY - CHS	S 235	NC8	1249,990	0,08	0,08	0,00
B2251	YATAY - CHS	S 235	NC8	1249,990	0,08	0,08	0,00
B2252	YATAY - CHS	S 235	NC8	1249,990	0,08	0,08	0,00
B2253	YATAY - CHS	S 235	NC8	1249,990	0,08	0,08	0,00
B2254	YATAY - CHS	S 235	NC8	1249,990	0,08	0,08	0,00
B2255	YATAY - CHS	S 235	NC8	1249,990	0,08	0,08	0,00
B2256	YATAY - CHS	S 235	NC8	1249,990	0,08	0,08	0,00
B2257	YATAY - CHS	S 235	NC8	1249,990	0,08	0,08	0,00
B2258	YATAY - CHS	S 235	NC8	1249,990	0,08	0,08	0,00
B2259	YATAY - CHS	S 235	NC8	1249,990	0,08	0,08	0,00
B2260	YATAY - CHS	S 235	NC8	1249,990	0,08	0,08	0,00
B2261	YATAY - CHS	S 235	NC8	1249,990	0,08	0,08	0,00
PL601	Platform - General cross-section	S 235	NC8	1562,500	0,03	0,03	0,03
PL602	Platform - General cross-section	S 235	NC8	2500,000	0,04	0,01	0,04
PL603	Platform - General cross-section	S 235	NC8	1249,990	0,04	0,04	0,04
PL604	Platform - General cross-section	S 235	NC8	2500,000	0,04	0,01	0,04
PL605	Platform - General cross-section	S 235	NC8	1093,750	0,03	0,03	0,03
PL606	Platform - General cross-section	S 235	NC8	2500,000	0,04	0,01	0,04
PL607	Platform - General cross-section	S 235	NC8	1249,990	0,03	0,03	0,03
PL608	Platform - General cross-section	S 235	NC8	2500,000	0,03	0,01	0,03
PL609	Platform - General cross-section	S 235	NC8	1250,010	0,03	0,03	0,03
PL610	Platform - General cross-section	S 235	NC8	1562,500	0,03	0,03	0,03
PL611	Platform - General cross-section	S 235	NC8	1249,990	0,03	0,03	0,03
PL612	Platform - General cross-section	S 235	NC8	1249,990	0,03	0,03	0,03
PL613	Platform - General cross-section	S 235	NC8	1250,010	0,03	0,03	0,03
PL614	Platform - General cross-section	S 235	NC8	1250,010	0,03	0,03	0,03
PL615	Platform - General cross-section	S 235	NC8	1406,250	0,03	0,03	0,03
PL616	Platform - General cross-section	S 235	NC8	1250,010	0,04	0,04	0,04
PL617	Platform - General cross-section	S 235	NC8	1250,010	0,04	0,04	0,04
PL618	Platform - General cross-section	S 235	NC8	1250,010	0,04	0,04	0,04
PL619	Platform - General cross-section	S 235	NC8	937,500	0,03	0,03	0,03
PL620	Platform - General cross-section	S 235	NC8	1249,990	0,04	0,04	0,04
C367	TOPUKLUK - C	S 235	NC7	1249,990	0,16	0,01	0,16
C368	TOPUKLUK - C	S 235	NC8	1250,010	0,06	0,01	0,06
C369	TOPUKLUK - C	S 235	NC8	1249,990	0,06	0,01	0,06
C370	TOPUKLUK - C	S 235	NC8	1250,010	0,06	0,01	0,06
C371	TOPUKLUK - C	S 235	NC8	1249,990	0,06	0,01	0,06
C372	TOPUKLUK - C	S 235	NC8	1250,010	0,06	0,01	0,06
C373	TOPUKLUK - C	S 235	NC8	1249,990	0,06	0,01	0,06
C374	TOPUKLUK - C	S 235	NC8	1250,010	0,06	0,01	0,06
C375	TOPUKLUK - C	S 235	NC8	1249,990	0,06	0,01	0,06
C376	TOPUKLUK - C	S 235	NC4	1249,990	0,16	0,01	0,16
CP260	DIYAGONAL - CHS	S 235	NC8	0,000	0,11	0,11	0,00

Member	css	mat	Case	dx [mm]	un.check [-]	sec.check [-]	stab.check [-]
CP261	DIYAGONAL - CHS	S 235	NC8	0,000	0,13	0,13	0,00
CP262	DIYAGONAL - CHS	S 235	NC8	0,000	0,13	0,13	0,00
CP263	DIYAGONAL - CHS	S 235	NC8	0,000	0,13	0,13	0,00
CP264	DIYAGONAL - CHS	S 235	NC8	0,000	0,13	0,13	0,00
CP265	DIYAGONAL - CHS	S 235	NC8	0,000	0,11	0,11	0,00
B2262	DİKME - CFCHS48.3X3	S 235	NC8	2000,000	0,27	0,27	0,00
B2263	DİKME - CFCHS48.3X3	S 235	NC8	110,000	0,21	0,21	0,00
B2264	DİKME - CFCHS48.3X3	S 235	NC8	2000,000	0,33	0,33	0,00
B2265	DİKME - CFCHS48.3X3	S 235	NC8	110,000	0,28	0,28	0,00
B2266	DİKME - CFCHS48.3X3	S 235	NC8	2000,000	0,37	0,37	0,00
B2267	DİKME - CFCHS48.3X3	S 235	NC8	110,000	0,31	0,31	0,00
B2268	DİKME - CFCHS48.3X3	S 235	NC8	2000,000	0,37	0,37	0,00
B2269	DİKME - CFCHS48.3X3	S 235	NC8	110,000	0,32	0,32	0,00
B2270	DİKME - CFCHS48.3X3	S 235	NC8	2000,000	0,40	0,40	0,00
B2271	DİKME - CFCHS48.3X3	S 235	NC8	110,000	0,33	0,33	0,00
B2272	DİKME - CFCHS48.3X3	S 235	NC8	2000,000	0,39	0,39	0,00
B2273	DİKME - CFCHS48.3X3	S 235	NC8	110,000	0,34	0,34	0,00
B2274	DİKME - CFCHS48.3X3	S 235	NC8	2000,000	0,40	0,40	0,00
B2275	DİKME - CFCHS48.3X3	S 235	NC8	110,000	0,33	0,33	0,00
B2276	DİKME - CFCHS48.3X3	S 235	NC8	2000,000	0,37	0,37	0,00
B2277	DİKME - CFCHS48.3X3	S 235	NC8	110,000	0,32	0,32	0,00
B2278	ALT_PROFIL - RHS	S 235	NC8	0,000	0,12	0,10	0,12
B2279	ALT_PROFIL - RHS	S 235	NC8	500,000	0,20	0,07	0,20
B2280	ALT_PROFIL - RHS	S 235	NC8	500,000	0,23	0,08	0,23
B2281	ALT_PROFIL - RHS	S 235	NC8	500,000	0,22	0,09	0,22
B2282	ALT_PROFIL - RHS	S 235	NC8	500,000	0,22	0,08	0,22
B2283	ALT_PROFIL - RHS	S 235	NC8	500,000	0,20	0,08	0,20
B2284	ALT_PROFIL - RHS	S 235	NC8	500,000	0,22	0,08	0,22
B2285	ALT_PROFIL - RHS	S 235	NC8	500,000	0,21	0,09	0,21
B2286	DİKME - CFCHS48.3X3	S 235	NC8	2000,000	0,37	0,37	0,00
B2287	DİKME - CFCHS48.3X3	S 235	NC8	110,000	0,31	0,31	0,00
B2288	ALT_PROFIL - RHS	S 235	NC8	500,000	0,23	0,08	0,23
B2289	DİKME - CFCHS48.3X3	S 235	NC8	2000,000	0,33	0,33	0,00
B2290	DİKME - CFCHS48.3X3	S 235	NC8	110,000	0,28	0,28	0,00
B2291	ALT_PROFIL - RHS	S 235	NC8	500,000	0,20	0,08	0,20
B2292	DİKME - CFCHS48.3X3	S 235	NC8	2000,000	0,27	0,27	0,00
B2293	DİKME - CFCHS48.3X3	S 235	NC8	110,000	0,21	0,21	0,00
B2294	ALT_PROFIL - RHS	S 235	NC8	0,000	0,12	0,10	0,12
B2295	ÜST_PROFIL - RHS	S 235	NC8	700,000	0,06	0,04	0,06
B2296	ÜST_PROFIL - RHS	S 235	NC8	700,000	0,10	0,09	0,10
B2297	ÜST_PROFIL - RHS	S 235	NC8	700,000	0,09	0,09	0,09
B2298	ÜST_PROFIL - RHS	S 235	NC8	700,000	0,10	0,09	0,10
B2299	ÜST_PROFIL - RHS	S 235	NC8	700,000	0,10	0,09	0,10
B2300	ÜST_PROFIL - RHS	S 235	NC8	700,000	0,11	0,10	0,11
B2301	ÜST_PROFIL - RHS	S 235	NC8	700,000	0,10	0,09	0,10
B2302	ÜST_PROFIL - RHS	S 235	NC8	700,000	0,10	0,09	0,10
B2303	ÜST_PROFIL - RHS	S 235	NC8	700,000	0,09	0,09	0,09
B2304	ÜST_PROFIL - RHS	S 235	NC8	700,000	0,10	0,09	0,10
B2305	ÜST_PROFIL - RHS	S 235	NC8	700,000	0,05	0,04	0,05
B2306	YATAY - CHS	S 235	NC8	1249,990	0,08	0,08	0,00
B2307	YATAY - CHS	S 235	NC8	1249,990	0,08	0,08	0,00
B2308	YATAY - CHS	S 235	NC8	1249,990	0,08	0,08	0,00
B2309	YATAY - CHS	S 235	NC8	1249,990	0,08	0,08	0,00
B2310	YATAY - CHS	S 235	NC8	1249,990	0,08	0,08	0,00
B2311	YATAY - CHS	S 235	NC8	1249,990	0,08	0,08	0,00
B2312	YATAY - CHS	S 235	NC8	1249,990	0,08	0,08	0,00
B2313	YATAY - CHS	S 235	NC8	1249,990	0,08	0,08	0,00
B2314	YATAY - CHS	S 235	NC8	1249,990	0,08	0,08	0,00
B2315	YATAY - CHS	S 235	NC8	1249,990	0,08	0,08	0,00
B2316	YATAY - CHS	S 235	NC8	1249,990	0,08	0,08	0,00
B2317	YATAY - CHS	S 235	NC8	1249,990	0,08	0,08	0,00
B2318	YATAY - CHS	S 235	NC8	1249,990	0,08	0,08	0,00
B2319	YATAY - CHS	S 235	NC8	1249,990	0,08	0,08	0,00
B2320	YATAY - CHS	S 235	NC8	1249,990	0,08	0,08	0,00
B2321	YATAY - CHS	S 235	NC8	1249,990	0,08	0,08	0,00
B2322	YATAY - CHS	S 235	NC8	1249,990	0,08	0,08	0,00
B2323	YATAY - CHS	S 235	NC8	1249,990	0,08	0,08	0,00
B2324	YATAY - CHS	S 235	NC8	1249,990	0,08	0,08	0,00
B2325	YATAY - CHS	S 235	NC8	1249,990	0,08	0,08	0,00
PL621	Platform - General cross-section	S 235	NC7	1249,990	0,02	0,02	0,02
PL622	Platform - General cross-section	S 235	NC8	1093,750	0,03	0,03	0,03
PL623	Platform - General cross-section	S 235	NC7	1249,990	0,02	0,02	0,02
PL624	Platform - General cross-section	S 235	NC8	1250,010	0,03	0,03	0,03
PL625	Platform - General cross-section	S 235	NC8	1249,990	0,02	0,02	0,02
PL626	Platform - General cross-section	S 235	NC8	2500,000	0,03	0,01	0,03
PL627	Platform - General cross-section	S 235	NC8	1250,010	0,02	0,02	0,02

Member	css	mat	Case	dx [mm]	un.check [-]	sec.check [-]	stab.check [-]
PL628	Platform - General cross-section	S 235	NC8	1562,500	0,03	0,03	0,03
PL629	Platform - General cross-section	S 235	NC7	2500,000	0,02	0,00	0,02
PL630	Platform - General cross-section	S 235	NC8	2500,000	0,04	0,01	0,04
PL631	Platform - General cross-section	S 235	NC7	1250,010	0,02	0,02	0,02
PL632	Platform - General cross-section	S 235	NC8	1250,010	0,04	0,03	0,04
PL633	Platform - General cross-section	S 235	NC7	1250,010	0,02	0,02	0,02
PL634	Platform - General cross-section	S 235	NC8	1249,990	0,03	0,03	0,03
PL635	Platform - General cross-section	S 235	NC8	1250,010	0,02	0,02	0,02
PL636	Platform - General cross-section	S 235	NC8	1250,010	0,03	0,03	0,03
PL637	Platform - General cross-section	S 235	NC4	2500,000	0,02	0,00	0,02
PL638	Platform - General cross-section	S 235	NC8	2500,000	0,03	0,01	0,03
PL639	Platform - General cross-section	S 235	NC7	1249,990	0,02	0,02	0,02
PL640	Platform - General cross-section	S 235	NC8	1406,250	0,03	0,03	0,03
C377	TOPUKLUK - C	S 235	NC8	1250,010	0,24	0,02	0,24
C378	TOPUKLUK - C	S 235	NC8	1249,990	0,07	0,01	0,07
C379	TOPUKLUK - C	S 235	NC8	1249,990	0,06	0,01	0,06
C380	TOPUKLUK - C	S 235	NC8	1249,990	0,06	0,01	0,06
C381	TOPUKLUK - C	S 235	NC8	1249,990	0,13	0,01	0,13
C382	TOPUKLUK - C	S 235	NC8	1250,010	0,13	0,01	0,13
C383	TOPUKLUK - C	S 235	NC8	1250,010	0,06	0,01	0,06
C384	TOPUKLUK - C	S 235	NC8	1250,010	0,06	0,01	0,06
C385	TOPUKLUK - C	S 235	NC8	1250,010	0,07	0,01	0,07
C386	TOPUKLUK - C	S 235	NC8	1249,990	0,23	0,02	0,23
CP266	DIYAGONAL - CHS	S 235	NC8	2957,431	0,08	0,08	0,00
CP267	DIYAGONAL - CHS	S 235	NC8	2957,431	0,08	0,08	0,00
CP268	DIYAGONAL - CHS	S 235	NC8	2957,431	0,09	0,09	0,00
CP269	DIYAGONAL - CHS	S 235	NC8	2957,431	0,09	0,09	0,00
CP270	DIYAGONAL - CHS	S 235	NC8	2957,431	0,08	0,08	0,00
CP271	DIYAGONAL - CHS	S 235	NC8	2957,431	0,08	0,08	0,00
B2326	DİKME - CFCHS48.3X3	S 235	NC8	110,000	0,30	0,30	0,00
B2327	DİKME - CFCHS48.3X3	S 235	NC8	110,000	0,26	0,26	0,00
B2328	DİKME - CFCHS48.3X3	S 235	NC8	110,000	0,41	0,41	0,00
B2329	DİKME - CFCHS48.3X3	S 235	NC8	0,000	0,33	0,33	0,00
B2330	DİKME - CFCHS48.3X3	S 235	NC8	110,000	0,38	0,38	0,00
B2331	DİKME - CFCHS48.3X3	S 235	NC8	0,000	0,35	0,35	0,00
B2332	DİKME - CFCHS48.3X3	S 235	NC8	110,000	0,40	0,40	0,00
B2333	DİKME - CFCHS48.3X3	S 235	NC8	0,000	0,37	0,37	0,00
B2334	DIKME - CFCHS48.3X3	S 235	NC8	110,000	0,42	0,42	0,00
B2335	DİKME - CFCHS48.3X3	S 235	NC8	0,000	0,38	0,38	0,00
B2336	DİKME - CFCHS48.3X3	S 235	NC8	110,000	0,48	0,48	0,00
B2337	DİKME - CFCHS48.3X3	S 235	NC8	0,000	0,39	0,39	0,00
B2338	DİKME - CFCHS48.3X3	S 235	NC8	110,000	0,42	0,42	0,00
B2339	DİKME - CFCHS48.3X3	S 235	NC8	0,000	0,38	0,38	0,00
B2340	DİKME - CFCHS48.3X3	S 235	NC8	110,000	0,40	0,40	0,00
B2341	DİKME - CFCHS48.3X3	S 235	NC8	0,000	0,37	0,37	0,00
B2342	ALT_PROFIL - RHS	S 235	NC8	200,000	0,17	0,08	0,17
B2343	ALT_PROFIL - RHS	S 235	NC8	200,000	0,19	0,11	0,19
B2344	ALT_PROFIL - RHS	S 235	NC8	200,000	0,19	0,12	0,19
B2345	ALT_PROFIL - RHS	S 235	NC8	200,000	0,19	0,13	0,19
B2346	ALT_PROFIL - RHS	S 235	NC8	700,000	0,19	0,18	0,19
B2347	ALT_PROFIL - RHS	S 235	NC8	200,000	0,18	0,12	0,18
B2348	ALT_PROFIL - RHS	S 235	NC8	700,000	0,19	0,18	0,19
B2349	ALT_PROFIL - RHS	S 235	NC8	200,000	0,19	0,13	0,19
B2350	DIKME - CFCHS48.3X3	S 235	NC8	110,000	0,38	0,38	0,00
B2351	DİKME - CFCHS48.3X3	S 235	NC8	0,000	0,35	0,35	0,00
B2352	ALT_PROFIL - RHS	S 235	NC8	200,000	0,19	0,12	0,19
B2353	DİKME - CFCHS48.3X3	S 235	NC8	110,000	0,41	0,41	0,00
B2354	DİKME - CFCHS48.3X3	S 235	NC8	0,000	0,34	0,34	0,00
B2355	ALT_PROFIL - RHS	S 235	NC8	200,000	0,19	0,11	0,19
B2356	DİKME - CFCHS48.3X3	S 235	NC8	110,000	0,30	0,30	0,00
B2357	DIKME - CFCHS48.3X3	S 235	NC8	110,000	0,26	0,26	0,00
B2358	ALT_PROFIL - RHS	S 235	NC8	200,000	0,17	0,08	0,17
B2359	ÜST_PROFIL - RHS	S 235	NC8	700,000	0,12	0,10	0,12
B2360	ÜST_PROFIL - RHS	S 235	NC8	0,000	0,12	0,10	0,12
B2361	ÜST_PROFIL - RHS	S 235	NC8	700,000	0,11	0,09	0,11
B2362	ÜST_PROFIL - RHS	S 235	NC8	700,000	0,11	0,10	0,11
B2363	ÜST_PROFIL - RHS	S 235	NC8	700,000	0,13	0,11	0,13
B2364	ÜST_PROFIL - RHS	S 235	NC8	0,000	0,16	0,13	0,16
B2365	ÜST_PROFIL - RHS	S 235	NC8	700,000	0,13	0,11	0,13
B2366	ÜST_PROFIL - RHS	S 235	NC8	700,000	0,11	0,10	0,11
B2367	ÜST_PROFIL - RHS	S 235	NC8	700,000	0,11	0,09	0,11
B2368	ÜST_PROFIL - RHS	S 235	NC8	0,000	0,12	0,10	0,12
B2369	ÜST_PROFIL - RHS	S 235	NC8	700,000	0,12	0,10	0,12
B2370	YATAY - CHS	S 235	NC8	1249,990	0,08	0,08	0,00
B2371	YATAY - CHS	S 235	NC8	1249,990	0,08	0,08	0,00
B2372	YATAY - CHS	S 235	NC8	1249,990	0,08	0,08	0,00

Member	css	mat	Case	dx [mm]	un.check [-]	sec.check [-]	stab.check [-]
B2373	YATAY - CHS	S 235	NC8	1249,990	0,08	0,08	0,00
B2374	YATAY - CHS	S 235	NC8	1249,990	0,08	0,08	0,00
B2375	YATAY - CHS	S 235	NC8	1249,990	0,08	0,08	0,00
B2376	YATAY - CHS	S 235	NC8	1249,990	0,08	0,08	0,00
B2377	YATAY - CHS	S 235	NC8	1249,990	0,08	0,08	0,00
B2378	YATAY - CHS	S 235	NC8	1249,990	0,08	0,08	0,00
B2379	YATAY - CHS	S 235	NC8	1249,990	0,08	0,08	0,00
B2380	YATAY - CHS	S 235	NC8	1249,990	0,08	0,08	0,00
B2381	YATAY - CHS	S 235	NC8	1249,990	0,08	0,08	0,00
B2382	YATAY - CHS	S 235	NC8	1249,990	0,08	0,08	0,00
B2383	YATAY - CHS	S 235	NC8	1249,990	0,08	0,08	0,00
B2384	YATAY - CHS	S 235	NC8	1249,990	0,08	0,08	0,00
B2385	YATAY - CHS	S 235	NC8	1249,990	0,08	0,08	0,00
B2386	YATAY - CHS	S 235	NC8	1249,990	0,08	0,08	0,00
B2387	YATAY - CHS	S 235	NC8	1249,990	0,08	0,08	0,00
B2388	YATAY - CHS	S 235	NC8	1249,990	0,08	0,08	0,00
B2389	YATAY - CHS	S 235	NC8	1249,990	0,08	0,08	0,00
PL641	Platform - General cross-section	S 235	NC8	1562,500	0,03	0,03	0,03
PL642	Platform - General cross-section	S 235	NC8	2500,000	0,04	0,01	0,04
PL643	Platform - General cross-section	S 235	NC8	1249,990	0,04	0,04	0,04
PL644	Platform - General cross-section	S 235	NC8	2500,000	0,04	0,01	0,04
PL645	Platform - General cross-section	S 235	NC8	1093,750	0,03	0,03	0,03
PL646	Platform - General cross-section	S 235	NC8	2500,000	0,04	0,01	0,04
PL647	Platform - General cross-section	S 235	NC8	1249,990	0,03	0,03	0,03
PL648	Platform - General cross-section	S 235	NC8	2500,000	0,03	0,01	0,03
PL649	Platform - General cross-section	S 235	NC8	1250,010	0,03	0,03	0,03
PL650	Platform - General cross-section	S 235	NC8	1562,500	0,03	0,03	0,03
PL651	Platform - General cross-section	S 235	NC8	1249,990	0,03	0,03	0,03
PL652	Platform - General cross-section	S 235	NC8	1249,990	0,03	0,03	0,03
PL653	Platform - General cross-section	S 235	NC8	1250,010	0,03	0,03	0,03
PL654	Platform - General cross-section	S 235	NC8	1250,010	0,03	0,03	0,03
PL655	Platform - General cross-section	S 235	NC8	1406,250	0,03	0,03	0,03
PL656	Platform - General cross-section	S 235	NC8	1250,010	0,04	0,04	0,04
PL657	Platform - General cross-section	S 235	NC8	1250,010	0,04	0,04	0,04
PL658	Platform - General cross-section	S 235	NC8	1250,010	0,04	0,04	0,04
PL659	Platform - General cross-section	S 235	NC8	937,500	0,03	0,03	0,03
PL660	Platform - General cross-section	S 235	NC8	1249,990	0,04	0,04	0,04
C387	TOPUKLUK - C	S 235	NC7	1249,990	0,17	0,01	0,17
C388	TOPUKLUK - C	S 235	NC8	1250,010	0,06	0,01	0,06
C389	TOPUKLUK - C	S 235	NC8	1249,990	0,06	0,01	0,06
C390	TOPUKLUK - C	S 235	NC8	1250,010	0,06	0,01	0,06
C391	TOPUKLUK - C	S 235	NC8	1249,990	0,06	0,01	0,06
C392	TOPUKLUK - C	S 235	NC8	1250,010	0,06	0,01	0,06
C393	TOPUKLUK - C	S 235	NC8	1249,990	0,06	0,01	0,06
C394	TOPUKLUK - C	S 235	NC8	1250,010	0,06	0,01	0,06
C395	TOPUKLUK - C	S 235	NC8	1249,990	0,06	0,01	0,06
C396	TOPUKLUK - C	S 235	NC4	1249,990	0,16	0,01	0,16
CP272	DIYAGONAL - CHS	S 235	NC8	0,000	0,11	0,11	0,00
CP273	DIYAGONAL - CHS	S 235	NC8	0,000	0,12	0,12	0,00
CP274	DIYAGONAL - CHS	S 235	NC8	0,000	0,13	0,13	0,00
CP275	DIYAGONAL - CHS	S 235	NC8	0,000	0,13	0,13	0,00
CP276	DIYAGONAL - CHS	S 235	NC8	0,000	0,12	0,12	0,00
CP277	DIYAGONAL - CHS	S 235	NC8	0,000	0,11	0,11	0,00
B2390	DİKME - CFCHS48.3X3	S 235	NC8	2000,000	0,26	0,26	0,00
B2391	DİKME - CFCHS48.3X3	S 235	NC8	110,000	0,20	0,20	0,00
B2392	DİKME - CFCHS48.3X3	S 235	NC8	2000,000	0,33	0,33	0,00
B2393	DİKME - CFCHS48.3X3	S 235	NC8	110,000	0,28	0,28	0,00
B2394	DİKME - CFCHS48.3X3	S 235	NC8	2000,000	0,37	0,37	0,00
B2395	DİKME - CFCHS48.3X3	S 235	NC8	110,000	0,30	0,30	0,00
B2396	DİKME - CFCHS48.3X3	S 235	NC8	2000,000	0,36	0,36	0,00
B2397	DİKME - CFCHS48.3X3	S 235	NC8	110,000	0,32	0,32	0,00
B2398	DİKME - CFCHS48.3X3	S 235	NC8	2000,000	0,39	0,39	0,00
B2399	DİKME - CFCHS48.3X3	S 235	NC8	110,000	0,32	0,32	0,00
B2400	DİKME - CFCHS48.3X3	S 235	NC8	2000,000	0,38	0,38	0,00
B2401	DİKME - CFCHS48.3X3	S 235	NC8	110,000	0,33	0,33	0,00
B2402	DİKME - CFCHS48.3X3	S 235	NC8	2000,000	0,39	0,39	0,00
B2403	DİKME - CFCHS48.3X3	S 235	NC8	110,000	0,32	0,32	0,00
B2404	DİKME - CFCHS48.3X3	S 235	NC8	2000,000	0,36	0,36	0,00
B2405	DİKME - CFCHS48.3X3	S 235	NC8	110,000	0,32	0,32	0,00
B2406	ALT_PROFIL - RHS	S 235	NC8	0,000	0,12	0,10	0,12
B2407	ALT_PROFIL - RHS	S 235	NC8	500,000	0,19	0,07	0,19
B2408	ALT_PROFIL - RHS	S 235	NC8	500,000	0,22	0,08	0,22
B2409	ALT_PROFIL - RHS	S 235	NC8	500,000	0,21	0,08	0,21
B2410	ALT_PROFIL - RHS	S 235	NC8	500,000	0,22	0,08	0,22
B2411	ALT_PROFIL - RHS	S 235	NC8	500,000	0,20	0,08	0,20
B2412	ALT_PROFIL - RHS	S 235	NC8	500,000	0,22	0,08	0,22

Member	css	mat	Case	dx [mm]	un.check [-]	sec.check [-]	stab.check [-]
B2413	ALT_PROFIL - RHS	S 235	NC8	500,000	0,21	0,08	0,21
B2414	DİKME - CFCHS48.3X3	S 235	NC8	2000,000	0,37	0,37	0,00
B2415	DİKME - CFCHS48.3X3	S 235	NC8	110,000	0,30	0,30	0,00
B2416	ALT_PROFIL - RHS	S 235	NC8	500,000	0,22	0,08	0,22
B2417	DİKME - CFCHS48.3X3	S 235	NC8	2000,000	0,33	0,33	0,00
B2418	DİKME - CFCHS48.3X3	S 235	NC8	110,000	0,28	0,28	0,00
B2419	ALT_PROFIL - RHS	S 235	NC8	500,000	0,19	0,07	0,19
B2420	DİKME - CFCHS48.3X3	S 235	NC8	2000,000	0,26	0,26	0,00
B2421	DİKME - CFCHS48.3X3	S 235	NC8	110,000	0,21	0,21	0,00
B2422	ALT_PROFIL - RHS	S 235	NC8	0,000	0,12	0,10	0,12
B2423	ÜST_PROFIL - RHS	S 235	NC8	700,000	0,05	0,04	0,05
B2424	ÜST_PROFIL - RHS	S 235	NC8	700,000	0,10	0,09	0,10
B2425	ÜST_PROFIL - RHS	S 235	NC8	700,000	0,09	0,09	0,09
B2426	ÜST_PROFIL - RHS	S 235	NC8	700,000	0,10	0,09	0,10
B2427	ÜST_PROFIL - RHS	S 235	NC8	700,000	0,09	0,08	0,09
B2428	ÜST_PROFIL - RHS	S 235	NC8	700,000	0,11	0,10	0,11
B2429	ÜST_PROFIL - RHS	S 235	NC8	700,000	0,09	0,08	0,09
B2430	ÜST_PROFIL - RHS	S 235	NC8	700,000	0,10	0,09	0,10
B2431	ÜST_PROFIL - RHS	S 235	NC8	700,000	0,09	0,09	0,09
B2432	ÜST_PROFIL - RHS	S 235	NC8	700,000	0,10	0,09	0,10
B2433	ÜST_PROFIL - RHS	S 235	NC8	700,000	0,05	0,04	0,05
B2434	YATAY - CHS	S 235	NC8	1249,990	0,08	0,08	0,00
B2435	YATAY - CHS	S 235	NC8	1249,990	0,08	0,08	0,00
B2436	YATAY - CHS	S 235	NC8	1249,990	0,08	0,08	0,00
B2437	YATAY - CHS	S 235	NC8	1249,990	0,08	0,08	0,00
B2438	YATAY - CHS	S 235	NC8	1249,990	0,08	0,08	0,00
B2439	YATAY - CHS	S 235	NC8	1249,990	0,08	0,08	0,00
B2440	YATAY - CHS	S 235	NC8	1249,990	0,08	0,08	0,00
B2441	YATAY - CHS	S 235	NC8	1249,990	0,08	0,08	0,00
B2442	YATAY - CHS	S 235	NC8	1249,990	0,08	0,08	0,00
B2443	YATAY - CHS	S 235	NC8	1249,990	0,08	0,08	0,00
B2444	YATAY - CHS	S 235	NC8	1249,990	0,08	0,08	0,00
B2445	YATAY - CHS	S 235	NC8	1249,990	0,08	0,08	0,00
B2446	YATAY - CHS	S 235	NC8	1249,990	0,08	0,08	0,00
B2447	YATAY - CHS	S 235	NC8	1249,990	0,08	0,08	0,00
B2448	YATAY - CHS	S 235	NC8	1249,990	0,08	0,08	0,00
B2449	YATAY - CHS	S 235	NC8	1249,990	0,08	0,08	0,00
B2450	YATAY - CHS	S 235	NC8	1249,990	0,08	0,08	0,00
B2451	YATAY - CHS	S 235	NC8	1249,990	0,08	0,08	0,00
B2452	YATAY - CHS	S 235	NC8	1249,990	0,08	0,08	0,00
B2453	YATAY - CHS	S 235	NC8	1249,990	0,08	0,08	0,00
PL661	Platform - General cross-section	S 235	NC7	1249,990	0,02	0,02	0,02
PL662	Platform - General cross-section	S 235	NC8	1093,750	0,03	0,03	0,03
PL663	Platform - General cross-section	S 235	NC7	1562,500	0,02	0,02	0,02
PL664	Platform - General cross-section	S 235	NC8	1250,010	0,03	0,03	0,03
PL665	Platform - General cross-section	S 235	NC8	1249,990	0,02	0,02	0,02
PL666	Platform - General cross-section	S 235	NC8	2500,000	0,03	0,01	0,03
PL667	Platform - General cross-section	S 235	NC8	1250,010	0,02	0,02	0,02
PL668	Platform - General cross-section	S 235	NC8	1562,500	0,03	0,03	0,03
PL669	Platform - General cross-section	S 235	NC8	1250,010	0,02	0,02	0,02
PL670	Platform - General cross-section	S 235	NC8	2500,000	0,04	0,01	0,04
PL671	Platform - General cross-section	S 235	NC7	1250,010	0,02	0,02	0,02
PL672	Platform - General cross-section	S 235	NC8	1250,010	0,04	0,03	0,04
PL673	Platform - General cross-section	S 235	NC7	1250,010	0,02	0,02	0,02
PL674	Platform - General cross-section	S 235	NC8	1249,990	0,03	0,03	0,03
PL675	Platform - General cross-section	S 235	NC7	1249,990	0,02	0,02	0,02
PL676	Platform - General cross-section	S 235	NC8	1250,010	0,03	0,03	0,03
PL677	Platform - General cross-section	S 235	NC4	1250,010	0,02	0,02	0,02
PL678	Platform - General cross-section	S 235	NC8	2500,000	0,03	0,01	0,03
PL679	Platform - General cross-section	S 235	NC7	1249,990	0,02	0,02	0,02
PL680	Platform - General cross-section	S 235	NC8	1406,250	0,03	0,03	0,03
C397	TOPUKLUK - C	S 235	NC8	1250,010	0,24	0,02	0,24
C398	TOPUKLUK - C	S 235	NC8	1249,990	0,07	0,01	0,07
C399	TOPUKLUK - C	S 235	NC8	1249,990	0,06	0,01	0,06
C400	TOPUKLUK - C	S 235	NC8	1249,990	0,06	0,01	0,06
C401	TOPUKLUK - C	S 235	NC8	1249,990	0,13	0,01	0,13
C402	TOPUKLUK - C	S 235	NC8	1250,010	0,13	0,01	0,13
C403	TOPUKLUK - C	S 235	NC8	1250,010	0,06	0,01	0,06
C404	TOPUKLUK - C	S 235	NC8	1250,010	0,06	0,01	0,06
C405	TOPUKLUK - C	S 235	NC8	1250,010	0,07	0,01	0,07
C406	TOPUKLUK - C	S 235	NC8	1249,990	0,23	0,02	0,23
CP278	DIYAGONAL - CHS	S 235	NC8	2957,431	0,08	0,08	0,00
CP279	DIYAGONAL - CHS	S 235	NC8	2957,431	0,08	0,08	0,00
CP280	DIYAGONAL - CHS	S 235	NC8	2957,431	0,09	0,09	0,00
CP281	DIYAGONAL - CHS	S 235	NC8	2957,431	0,09	0,09	0,00
CP282	DIYAGONAL - CHS	S 235	NC8	2957,431	0,08	0,08	0,00

Member	css	mat	Case	dx [mm]	un.check [-]	sec.check [-]	stab.check [-]
CP283	DIYAGONAL - CHS	S 235	NC8	2957,431	0,08	0,08	0,00
B2454	DİKME - CFCHS48.3X3	S 235	NC8	110,000	0,29	0,29	0,00
B2455	DİKME - CFCHS48.3X3	S 235	NC8	2000,000	0,25	0,25	0,00
B2456	DİKME - CFCHS48.3X3	S 235	NC8	110,000	0,39	0,39	0,00
B2457	DİKME - CFCHS48.3X3	S 235	NC8	0,000	0,33	0,33	0,00
B2458	DİKME - CFCHS48.3X3	S 235	NC8	110,000	0,38	0,38	0,00
B2459	DİKME - CFCHS48.3X3	S 235	NC8	0,000	0,35	0,35	0,00
B2460	DİKME - CFCHS48.3X3	S 235	NC8	110,000	0,39	0,39	0,00
B2461	DİKME - CFCHS48.3X3	S 235	NC8	0,000	0,36	0,36	0,00
B2462	DİKME - CFCHS48.3X3	S 235	NC8	110,000	0,41	0,41	0,00
B2463	DİKME - CFCHS48.3X3	S 235	NC8	0,000	0,37	0,37	0,00
B2464	DİKME - CFCHS48.3X3	S 235	NC8	110,000	0,47	0,47	0,00
B2465	DİKME - CFCHS48.3X3	S 235	NC8	0,000	0,38	0,38	0,00
B2466	DİKME - CFCHS48.3X3	S 235	NC8	110,000	0,41	0,41	0,00
B2467	DİKME - CFCHS48.3X3	S 235	NC8	0,000	0,37	0,37	0,00
B2468	DİKME - CFCHS48.3X3	S 235	NC8	110,000	0,39	0,39	0,00
B2469	DİKME - CFCHS48.3X3	S 235	NC8	0,000	0,36	0,36	0,00
B2470	ALT_PROFIL - RHS	S 235	NC8	200,000	0,17	0,08	0,17
B2471	ALT_PROFIL - RHS	S 235	NC8	200,000	0,19	0,11	0,19
B2472	ALT_PROFIL - RHS	S 235	NC8	200,000	0,19	0,12	0,19
B2473	ALT_PROFIL - RHS	S 235	NC8	200,000	0,19	0,13	0,19
B2474	ALT_PROFIL - RHS	S 235	NC8	700,000	0,19	0,18	0,19
B2475	ALT_PROFIL - RHS	S 235	NC8	200,000	0,18	0,12	0,18
B2476	ALT_PROFIL - RHS	S 235	NC8	700,000	0,19	0,18	0,19
B2477	ALT_PROFIL - RHS	S 235	NC8	200,000	0,19	0,13	0,19
B2478	DİKME - CFCHS48.3X3	S 235	NC8	110,000	0,38	0,38	0,00
B2479	DİKME - CFCHS48.3X3	S 235	NC8	0,000	0,35	0,35	0,00
B2480	ALT_PROFIL - RHS	S 235	NC8	200,000	0,19	0,12	0,19
B2481	DİKME - CFCHS48.3X3	S 235	NC8	110,000	0,39	0,39	0,00
B2482	DİKME - CFCHS48.3X3	S 235	NC8	0,000	0,33	0,33	0,00
B2483	ALT_PROFIL - RHS	S 235	NC8	200,000	0,19	0,11	0,19
B2484	DİKME - CFCHS48.3X3	S 235	NC8	110,000	0,29	0,29	0,00
B2485	DİKME - CFCHS48.3X3	S 235	NC8	2000,000	0,25	0,25	0,00
B2486	ALT_PROFIL - RHS	S 235	NC8	200,000	0,17	0,08	0,17
B2487	ÜST_PROFIL - RHS	S 235	NC8	700,000	0,12	0,10	0,12
B2488	ÜST_PROFIL - RHS	S 235	NC8	0,000	0,12	0,10	0,12
B2489	ÜST_PROFIL - RHS	S 235	NC8	700,000	0,11	0,09	0,11
B2490	ÜST_PROFIL - RHS	S 235	NC8	700,000	0,11	0,10	0,11
B2491	ÜST_PROFIL - RHS	S 235	NC8	700,000	0,13	0,11	0,13
B2492	ÜST_PROFIL - RHS	S 235	NC8	0,000	0,15	0,13	0,15
B2493	ÜST_PROFIL - RHS	S 235	NC8	700,000	0,13	0,11	0,13
B2494	ÜST_PROFIL - RHS	S 235	NC8	700,000	0,11	0,10	0,11
B2495	ÜST_PROFIL - RHS	S 235	NC8	700,000	0,11	0,09	0,11
B2496	ÜST_PROFIL - RHS	S 235	NC8	0,000	0,12	0,10	0,12
B2497	ÜST_PROFIL - RHS	S 235	NC8	700,000	0,13	0,10	0,13
B2498	YATAY - CHS	S 235	NC8	1249,990	0,08	0,08	0,00
B2499	YATAY - CHS	S 235	NC8	1249,990	0,08	0,08	0,00
B2500	YATAY - CHS	S 235	NC8	1249,990	0,08	0,08	0,00
B2501	YATAY - CHS	S 235	NC8	1249,990	0,08	0,08	0,00
B2502	YATAY - CHS	S 235	NC8	1249,990	0,08	0,08	0,00
B2503	YATAY - CHS	S 235	NC8	1249,990	0,08	0,08	0,00
B2504	YATAY - CHS	S 235	NC8	1249,990	0,08	0,08	0,00
B2505	YATAY - CHS	S 235	NC8	1249,990	0,08	0,08	0,00
B2506	YATAY - CHS	S 235	NC8	1249,990	0,08	0,08	0,00
B2507	YATAY - CHS	S 235	NC8	1249,990	0,08	0,08	0,00
B2508	YATAY - CHS	S 235	NC8	1249,990	0,08	0,08	0,00
B2509	YATAY - CHS	S 235	NC8	1249,990	0,08	0,08	0,00
B2510	YATAY - CHS	S 235	NC8	1249,990	0,08	0,08	0,00
B2511	YATAY - CHS	S 235	NC8	1249,990	0,08	0,08	0,00
B2512	YATAY - CHS	S 235	NC8	1249,990	0,08	0,08	0,00
B2513	YATAY - CHS	S 235	NC8	1249,990	0,08	0,08	0,00
B2514	YATAY - CHS	S 235	NC8	1249,990	0,08	0,08	0,00
B2515	YATAY - CHS	S 235	NC8	1249,990	0,08	0,08	0,00
B2516	YATAY - CHS	S 235	NC8	1249,990	0,08	0,08	0,00
B2517	YATAY - CHS	S 235	NC8	1249,990	0,08	0,08	0,00
PL681	Platform - General cross-section	S 235	NC8	1562,500	0,03	0,03	0,03
PL682	Platform - General cross-section	S 235	NC8	2500,000	0,04	0,01	0,04
PL683	Platform - General cross-section	S 235	NC8	1249,990	0,04	0,04	0,04
PL684	Platform - General cross-section	S 235	NC8	2500,000	0,04	0,01	0,04
PL685	Platform - General cross-section	S 235	NC8	1093,750	0,03	0,03	0,03
PL686	Platform - General cross-section	S 235	NC8	2500,000	0,04	0,01	0,04
PL687	Platform - General cross-section	S 235	NC8	1249,990	0,03	0,03	0,03
PL688	Platform - General cross-section	S 235	NC8	2500,000	0,03	0,01	0,03
PL689	Platform - General cross-section	S 235	NC8	1250,010	0,03	0,03	0,03
PL690	Platform - General cross-section	S 235	NC8	1562,500	0,03	0,03	0,03
PL691	Platform - General cross-section	S 235	NC8	1249,990	0,03	0,03	0,03

Member	css	mat	Case	dx [mm]	un.check [-]	sec.check [-]	stab.check [-]
PL692	Platform - General cross-section	S 235	NC8	1249,990	0,03	0,03	0,03
PL693	Platform - General cross-section	S 235	NC8	1250,010	0,03	0,03	0,03
PL694	Platform - General cross-section	S 235	NC8	1250,010	0,03	0,03	0,03
PL695	Platform - General cross-section	S 235	NC8	1406,250	0,03	0,03	0,03
PL696	Platform - General cross-section	S 235	NC8	1250,010	0,04	0,04	0,04
PL697	Platform - General cross-section	S 235	NC8	1250,010	0,04	0,04	0,04
PL698	Platform - General cross-section	S 235	NC8	1250,010	0,04	0,04	0,04
PL699	Platform - General cross-section	S 235	NC8	937,500	0,03	0,03	0,03
PL700	Platform - General cross-section	S 235	NC8	1249,990	0,04	0,04	0,04
C407	TOPUKLUK - C	S 235	NC5	1250,010	0,17	0,01	0,17
C408	TOPUKLUK - C	S 235	NC8	1250,010	0,06	0,01	0,06
C409	TOPUKLUK - C	S 235	NC8	1249,990	0,06	0,01	0,06
C410	TOPUKLUK - C	S 235	NC8	1250,010	0,06	0,01	0,06
C411	TOPUKLUK - C	S 235	NC8	1249,990	0,06	0,01	0,06
C412	TOPUKLUK - C	S 235	NC8	1250,010	0,06	0,01	0,06
C413	TOPUKLUK - C	S 235	NC8	1249,990	0,06	0,01	0,06
C414	TOPUKLUK - C	S 235	NC8	1250,010	0,06	0,01	0,06
C415	TOPUKLUK - C	S 235	NC8	1249,990	0,06	0,01	0,06
C416	TOPUKLUK - C	S 235	NC4	1249,990	0,17	0,01	0,17
CP284	DIYAGONAL - CHS	S 235	NC8	0,000	0,11	0,11	0,00
CP285	DIYAGONAL - CHS	S 235	NC8	0,000	0,12	0,12	0,00
CP286	DIYAGONAL - CHS	S 235	NC8	0,000	0,13	0,13	0,00
CP287	DIYAGONAL - CHS	S 235	NC8	0,000	0,13	0,13	0,00
CP288	DIYAGONAL - CHS	S 235	NC8	0,000	0,12	0,12	0,00
CP289	DIYAGONAL - CHS	S 235	NC8	0,000	0,11	0,11	0,00
B2518	DİKME - CFCHS48.3X3	S 235	NC8	2000,000	0,26	0,26	0,00
B2519	DİKME - CFCHS48.3X3	S 235	NC8	110,000	0,20	0,20	0,00
B2520	DİKME - CFCHS48.3X3	S 235	NC8	2000,000	0,32	0,32	0,00
B2521	DİKME - CFCHS48.3X3	S 235	NC8	110,000	0,27	0,27	0,00
B2522	DİKME - CFCHS48.3X3	S 235	NC8	2000,000	0,36	0,36	0,00
B2523	DİKME - CFCHS48.3X3	S 235	NC8	110,000	0,29	0,29	0,00
B2524	DİKME - CFCHS48.3X3	S 235	NC8	2000,000	0,35	0,35	0,00
B2525	DİKME - CFCHS48.3X3	S 235	NC8	110,000	0,31	0,31	0,00
B2526	DİKME - CFCHS48.3X3	S 235	NC8	2000,000	0,38	0,38	0,00
B2527	DİKME - CFCHS48.3X3	S 235	NC8	110,000	0,31	0,31	0,00
B2528	DİKME - CFCHS48.3X3	S 235	NC8	2000,000	0,37	0,37	0,00
B2529	DİKME - CFCHS48.3X3	S 235	NC8	110,000	0,33	0,33	0,00
B2530	DIKME - CFCHS48.3X3	S 235	NC8	2000,000	0,38	0,38	0,00
B2531	DİKME - CFCHS48.3X3	S 235	NC8	110,000	0,31	0,31	0,00
B2532	DİKME - CFCHS48.3X3	S 235	NC8	2000,000	0,35	0,35	0,00
B2533	DİKME - CFCHS48.3X3	S 235	NC8	110,000	0,31	0,31	0,00
B2534	ALT_PROFIL - RHS	S 235	NC8	0,000	0,11	0,09	0,11
B2535	ALT_PROFIL - RHS	S 235	NC8	500,000	0,19	0,07	0,19
B2536	ALT_PROFIL - RHS	S 235	NC8	500,000	0,22	0,08	0,22
B2537	ALT_PROFIL - RHS	S 235	NC8	500,000	0,21	0,08	0,21
B2538	ALT_PROFIL - RHS	S 235	NC8	500,000	0,22	0,08	0,22
B2539	ALT_PROFIL - RHS	S 235	NC8	500,000	0,19	0,08	0,19
B2540	ALT_PROFIL - RHS	S 235	NC8	500,000	0,22	0,08	0,22
B2541	ALT_PROFIL - RHS	S 235	NC8	500,000	0,21	0,08	0,21
B2542	DİKME - CFCHS48.3X3	S 235	NC8	2000,000	0,36	0,36	0,00
B2543	DİKME - CFCHS48.3X3	S 235	NC8	110,000	0,29	0,29	0,00
B2544	ALT_PROFIL - RHS	S 235	NC8	500,000	0,22	0,08	0,22
B2545	DİKME - CFCHS48.3X3	S 235	NC8	2000,000	0,32	0,32	0,00
B2546	DIKME - CFCHS48.3X3	S 235	NC8	110,000	0,27	0,27	0,00
B2547	ALT_PROFIL - RHS	S 235	NC8	500,000	0,19	0,07	0,19
B2548	DİKME - CFCHS48.3X3	S 235	NC8	2000,000	0,26	0,26	0,00
B2549	DİKME - CFCHS48.3X3	S 235	NC8	110,000	0,20	0,20	0,00
B2550	ALT_PROFIL - RHS	S 235	NC8	0,000	0,11	0,09	0,11
B2551	ÜST_PROFIL - RHS	S 235	NC5	700,000	0,05	0,04	0,05
B2552	ÜST_PROFIL - RHS	S 235	NC8	700,000	0,10	0,09	0,10
B2553	ÜST_PROFIL - RHS	S 235	NC8	700,000	0,09	0,08	0,09
B2554	ÜST_PROFIL - RHS	S 235	NC8	700,000	0,09	0,09	0,09
B2555	ÜST_PROFIL - RHS	S 235	NC8	700,000	0,09	0,08	0,09
B2556	ÜST_PROFIL - RHS	S 235	NC8	700,000	0,10	0,10	0,10
B2557	ÜST_PROFIL - RHS	S 235	NC8	700,000	0,09	0,08	0,09
B2558	ÜST_PROFIL - RHS	S 235	NC8	700,000	0,09	0,09	0,09
B2559	ÜST_PROFIL - RHS	S 235	NC8	700,000	0,09	0,09	0,09
B2560	ÜST_PROFIL - RHS	S 235	NC8	700,000	0,10	0,09	0,10
B2561	ÜST_PROFIL - RHS	S 235	NC4	700,000	0,05	0,04	0,05
B2562	YATAY - CHS	S 235	NC8	1249,990	0,08	0,08	0,00
B2563	YATAY - CHS	S 235	NC8	1250,010	0,08	0,08	0,00
B2564	YATAY - CHS	S 235	NC8	1249,990	0,08	0,08	0,00
B2565	YATAY - CHS	S 235	NC8	1249,990	0,08	0,08	0,00
B2566	YATAY - CHS	S 235	NC8	1249,990	0,08	0,08	0,00
B2567	YATAY - CHS	S 235	NC8	1249,990	0,08	0,08	0,00
B2568	YATAY - CHS	S 235	NC8	1249,990	0,08	0,08	0,00

Member	css	mat	Case	dx [mm]	un.check [-]	sec.check [-]	stab.check [-]
B2569	YATAY - CHS	S 235	NC8	1249,990	0,08	0,08	0,00
B2570	YATAY - CHS	S 235	NC8	1249,990	0,08	0,08	0,00
B2571	YATAY - CHS	S 235	NC8	1249,990	0,08	0,08	0,00
B2572	YATAY - CHS	S 235	NC8	1249,990	0,08	0,08	0,00
B2573	YATAY - CHS	S 235	NC8	1249,990	0,08	0,08	0,00
B2574	YATAY - CHS	S 235	NC8	1249,990	0,08	0,08	0,00
B2575	YATAY - CHS	S 235	NC8	1249,990	0,08	0,08	0,00
B2576	YATAY - CHS	S 235	NC8	1249,990	0,08	0,08	0,00
B2577	YATAY - CHS	S 235	NC8	1249,990	0,08	0,08	0,00
B2578	YATAY - CHS	S 235	NC8	1249,990	0,08	0,08	0,00
B2579	YATAY - CHS	S 235	NC8	1249,990	0,08	0,08	0,00
B2580	YATAY - CHS	S 235	NC8	1249,990	0,08	0,08	0,00
B2581	YATAY - CHS	S 235	NC8	1249,990	0,08	0,08	0,00
PL701	Platform - General cross-section	S 235	NC7	1249,990	0,02	0,02	0,02
PL702	Platform - General cross-section	S 235	NC8	1093,750	0,03	0,03	0,03
PL703	Platform - General cross-section	S 235	NC4	1249,990	0,02	0,02	0,02
PL704	Platform - General cross-section	S 235	NC8	1249,990	0,03	0,03	0,03
PL705	Platform - General cross-section	S 235	NC8	1249,990	0,02	0,02	0,02
PL706	Platform - General cross-section	S 235	NC8	2500,000	0,03	0,01	0,03
PL707	Platform - General cross-section	S 235	NC8	1250,010	0,02	0,02	0,02
PL708	Platform - General cross-section	S 235	NC8	2500,000	0,03	0,01	0,03
PL709	Platform - General cross-section	S 235	NC8	1250,010	0,02	0,02	0,02
PL710	Platform - General cross-section	S 235	NC8	2500,000	0,03	0,01	0,03
PL711	Platform - General cross-section	S 235	NC7	1250,010	0,02	0,02	0,02
PL712	Platform - General cross-section	S 235	NC8	1250,010	0,03	0,03	0,03
PL713	Platform - General cross-section	S 235	NC7	1250,010	0,02	0,02	0,02
PL714	Platform - General cross-section	S 235	NC8	1249,990	0,03	0,03	0,03
PL715	Platform - General cross-section	S 235	NC7	1249,990	0,02	0,02	0,02
PL716	Platform - General cross-section	S 235	NC8	1250,010	0,03	0,03	0,03
PL717	Platform - General cross-section	S 235	NC4	1250,010	0,02	0,02	0,02
PL718	Platform - General cross-section	S 235	NC8	2343,750	0,03	0,01	0,03
PL719	Platform - General cross-section	S 235	NC7	1249,990	0,02	0,02	0,02
PL720	Platform - General cross-section	S 235	NC8	1406,250	0,03	0,03	0,03
C417	TOPUKLUK - C	S 235	NC8	1250,010	0,24	0,02	0,24
C418	TOPUKLUK - C	S 235	NC8	1249,990	0,07	0,01	0,07
C419	TOPUKLUK - C	S 235	NC8	1249,990	0,06	0,01	0,06
C420	TOPUKLUK - C	S 235	NC8	1249,990	0,06	0,01	0,06
C421	TOPUKLUK - C	S 235	NC8	1249,990	0,13	0,01	0,13
C422	TOPUKLUK - C	S 235	NC8	1250,010	0,13	0,01	0,13
C423	TOPUKLUK - C	S 235	NC8	1250,010	0,06	0,01	0,06
C424	TOPUKLUK - C	S 235	NC8	1250,010	0,06	0,01	0,06
C425	TOPUKLUK - C	S 235	NC8	1250,010	0,07	0,01	0,07
C426	TOPUKLUK - C	S 235	NC8	1249,990	0,24	0,02	0,24
CP290	DIYAGONAL - CHS	S 235	NC8	2957,431	0,08	0,08	0,00
CP291	DIYAGONAL - CHS	S 235	NC8	2957,431	0,08	0,08	0,00
CP292	DIYAGONAL - CHS	S 235	NC8	2957,431	0,09	0,09	0,00
CP293	DIYAGONAL - CHS	S 235	NC8	2957,431	0,09	0,09	0,00
CP294	DIYAGONAL - CHS	S 235	NC8	2957,431	0,08	0,08	0,00
CP295	DIYAGONAL - CHS	S 235	NC8	2957,431	0,08	0,08	0,00
B2582	DİKME - CFCHS48.3X3	S 235	NC8	110,000	0,29	0,29	0,00
B2583	DİKME - CFCHS48.3X3	S 235	NC8	2000,000	0,25	0,25	0,00
B2584	DİKME - CFCHS48.3X3	S 235	NC8	110,000	0,39	0,39	0,00
B2585	DİKME - CFCHS48.3X3	S 235	NC8	0,000	0,32	0,32	0,00
B2586	DİKME - CFCHS48.3X3	S 235	NC8	110,000	0,37	0,37	0,00
B2587	DİKME - CFCHS48.3X3	S 235	NC8	0,000	0,34	0,34	0,00
B2588	DİKME - CFCHS48.3X3	S 235	NC8	110,000	0,38	0,38	0,00
B2589	DİKME - CFCHS48.3X3	S 235	NC8	0,000	0,36	0,36	0,00
B2590	DİKME - CFCHS48.3X3	S 235	NC8	110,000	0,40	0,40	0,00
B2591	DİKME - CFCHS48.3X3	S 235	NC8	0,000	0,37	0,37	0,00
B2592	DİKME - CFCHS48.3X3	S 235	NC8	110,000	0,46	0,46	0,00
B2593	DİKME - CFCHS48.3X3	S 235	NC8	0,000	0,38	0,38	0,00
B2594	DİKME - CFCHS48.3X3	S 235	NC8	110,000	0,40	0,40	0,00
B2595	DİKME - CFCHS48.3X3	S 235	NC8	0,000	0,37	0,37	0,00
B2596	DİKME - CFCHS48.3X3	S 235	NC8	110,000	0,38	0,38	0,00
B2597	DİKME - CFCHS48.3X3	S 235	NC8	0,000	0,36	0,36	0,00
B2598	ALT_PROFIL - RHS	S 235	NC8	200,000	0,17	0,08	0,17
B2599	ALT_PROFIL - RHS	S 235	NC8	200,000	0,18	0,11	0,18
B2600	ALT_PROFIL - RHS	S 235	NC8	200,000	0,19	0,12	0,19
B2601	ALT_PROFIL - RHS	S 235	NC8	200,000	0,18	0,13	0,18
B2602	ALT_PROFIL - RHS	S 235	NC8	700,000	0,19	0,18	0,19
B2603	ALT_PROFIL - RHS	S 235	NC8	200,000	0,17	0,12	0,17
B2604	ALT_PROFIL - RHS	S 235	NC8	700,000	0,19	0,18	0,19
B2605	ALT_PROFIL - RHS	S 235	NC8	200,000	0,19	0,13	0,19
B2606	DİKME - CFCHS48.3X3	S 235	NC8	110,000	0,37	0,37	0,00
B2607	DİKME - CFCHS48.3X3	S 235	NC8	0,000	0,34	0,34	0,00
B2608	ALT_PROFIL - RHS	S 235	NC8	200,000	0,19	0,12	0,19

Member	css	mat	Case	dx [mm]	un.check [-]	sec.check [-]	stab.check [-]
B2609	DİKME - CFCHS48.3X3	S 235	NC8	110,000	0,39	0,39	0,00
B2610	DİKME - CFCHS48.3X3	S 235	NC8	0,000	0,32	0,32	0,00
B2611	ALT_PROFIL - RHS	S 235	NC8	200,000	0,19	0,11	0,19
B2612	DİKME - CFCHS48.3X3	S 235	NC8	110,000	0,29	0,29	0,00
B2613	DİKME - CFCHS48.3X3	S 235	NC8	2000,000	0,25	0,25	0,00
B2614	ALT_PROFIL - RHS	S 235	NC8	200,000	0,17	0,08	0,17
B2615	ÜST_PROFIL - RHS	S 235	NC8	700,000	0,12	0,10	0,12
B2616	ÜST_PROFIL - RHS	S 235	NC8	0,000	0,12	0,10	0,12
B2617	ÜST_PROFIL - RHS	S 235	NC8	700,000	0,11	0,09	0,11
B2618	ÜST_PROFIL - RHS	S 235	NC8	700,000	0,11	0,10	0,11
B2619	ÜST_PROFIL - RHS	S 235	NC8	700,000	0,13	0,11	0,13
B2620	ÜST_PROFIL - RHS	S 235	NC8	0,000	0,15	0,13	0,15
B2621	ÜST_PROFIL - RHS	S 235	NC8	700,000	0,13	0,11	0,13
B2622	ÜST_PROFIL - RHS	S 235	NC8	700,000	0,11	0,10	0,11
B2623	ÜST_PROFIL - RHS	S 235	NC8	700,000	0,11	0,09	0,11
B2624	ÜST_PROFIL - RHS	S 235	NC8	0,000	0,12	0,10	0,12
B2625	ÜST_PROFIL - RHS	S 235	NC8	700,000	0,13	0,10	0,13
B2626	YATAY - CHS	S 235	NC8	1249,990	0,08	0,08	0,00
B2627	YATAY - CHS	S 235	NC8	1249,990	0,08	0,08	0,00
B2628	YATAY - CHS	S 235	NC8	1249,990	0,08	0,08	0,00
B2629	YATAY - CHS	S 235	NC8	1249,990	0,08	0,08	0,00
B2630	YATAY - CHS	S 235	NC8	1249,990	0,08	0,08	0,00
B2631	YATAY - CHS	S 235	NC8	1249,990	0,08	0,08	0,00
B2632	YATAY - CHS	S 235	NC8	1249,990	0,08	0,08	0,00
B2633	YATAY - CHS	S 235	NC8	1249,990	0,08	0,08	0,00
B2634	YATAY - CHS	S 235	NC8	1249,990	0,08	0,08	0,00
B2635	YATAY - CHS	S 235	NC8	1249,990	0,08	0,08	0,00
B2636	YATAY - CHS	S 235	NC8	1249,990	0,08	0,08	0,00
B2637	YATAY - CHS	S 235	NC8	1249,990	0,08	0,08	0,00
B2638	YATAY - CHS	S 235	NC8	1249,990	0,08	0,08	0,00
B2639	YATAY - CHS	S 235	NC8	1249,990	0,08	0,08	0,00
B2640	YATAY - CHS	S 235	NC8	1249,990	0,08	0,08	0,00
B2641	YATAY - CHS	S 235	NC8	1249,990	0,08	0,08	0,00
B2642	YATAY - CHS	S 235	NC8	1249,990	0,08	0,08	0,00
B2643	YATAY - CHS	S 235	NC8	1249,990	0,08	0,08	0,00
B2644	YATAY - CHS	S 235	NC8	1249,990	0,08	0,08	0,00
B2645	YATAY - CHS	S 235	NC8	1249,990	0,08	0,08	0,00
PL721	Platform - General cross-section	S 235	NC8	1562,500	0,03	0,03	0,03
PL722	Platform - General cross-section	S 235	NC8	2500,000	0,04	0,01	0,04
PL723	Platform - General cross-section	S 235	NC8	1249,990	0,04	0,04	0,04
PL724	Platform - General cross-section	S 235	NC8	2500,000	0,04	0,01	0,04
PL725	Platform - General cross-section	S 235	NC8	1093,750	0,03	0,03	0,03
PL726	Platform - General cross-section	S 235	NC8	2500,000	0,04	0,01	0,04
PL727	Platform - General cross-section	S 235	NC8	1249,990	0,03	0,03	0,03
PL728	Platform - General cross-section	S 235	NC8	2500,000	0,03	0,01	0,03
PL729	Platform - General cross-section	S 235	NC8	1250,010	0,03	0,03	0,03
PL730	Platform - General cross-section	S 235	NC8	1562,500	0,03	0,03	0,03
PL731	Platform - General cross-section	S 235	NC8	1249,990	0,03	0,03	0,03
PL732	Platform - General cross-section	S 235	NC8	1249,990	0,03	0,03	0,03
PL733	Platform - General cross-section	S 235	NC8	1250,010	0,03	0,03	0,03
PL734	Platform - General cross-section	S 235	NC8	1250,010	0,03	0,03	0,03
PL735	Platform - General cross-section	S 235	NC8	1406,250	0,03	0,03	0,03
PL736	Platform - General cross-section	S 235	NC8	1250,010	0,04	0,04	0,04
PL737	Platform - General cross-section	S 235	NC8	1250,010	0,04	0,04	0,04
PL738	Platform - General cross-section	S 235	NC8	1250,010	0,04	0,04	0,04
PL739	Platform - General cross-section	S 235	NC8	937,500	0,03	0,03	0,03
PL740	Platform - General cross-section	S 235	NC8	1249,990	0,04	0,04	0,04
C427	TOPUKLUK - C	S 235	NC5	1250,010	0,18	0,01	0,18
C428	TOPUKLUK - C	S 235	NC8	1250,010	0,06	0,01	0,06
C429	TOPUKLUK - C	S 235	NC8	1249,990	0,06	0,01	0,06
C430	TOPUKLUK - C	S 235	NC8	1250,010	0,06	0,01	0,06
C431	TOPUKLUK - C	S 235	NC8	1249,990	0,06	0,01	0,06
C432	TOPUKLUK - C	S 235	NC8	1250,010	0,06	0,01	0,06
C433	TOPUKLUK - C	S 235	NC8	1249,990	0,06	0,01	0,06
C434	TOPUKLUK - C	S 235	NC8	1250,010	0,06	0,01	0,06
C435	TOPUKLUK - C	S 235	NC8	1249,990	0,06	0,01	0,06
C436	TOPUKLUK - C	S 235	NC4	1249,990	0,17	0,01	0,17
CP296	DIYAGONAL - CHS	S 235	NC8	0,000	0,11	0,11	0,00
CP297	DIYAGONAL - CHS	S 235	NC8	0,000	0,12	0,12	0,00
CP298	DIYAGONAL - CHS	S 235	NC8	0,000	0,13	0,13	0,00
CP299	DIYAGONAL - CHS	S 235	NC8	0,000	0,13	0,13	0,00
CP300	DIYAGONAL - CHS	S 235	NC8	0,000	0,12	0,12	0,00
CP301	DIYAGONAL - CHS	S 235	NC8	0,000	0,11	0,11	0,00
B2646	DİKME - CFCHS48.3X3	S 235	NC8	2000,000	0,25	0,25	0,00
B2647	DİKME - CFCHS48.3X3	S 235	NC8	110,000	0,20	0,20	0,00
B2648	DİKME - CFCHS48.3X3	S 235	NC8	2000,000	0,32	0,32	0,00

Member	css	mat	Case	dx [mm]	un.check [-]	sec.check [-]	stab.check [-]
B2649	DİKME - CFCHS48.3X3	S 235	NC8	110,000	0,27	0,27	0,00
B2650	DİKME - CFCHS48.3X3	S 235	NC8	2000,000	0,35	0,35	0,00
B2651	DİKME - CFCHS48.3X3	S 235	NC8	110,000	0,29	0,29	0,00
B2652	DİKME - CFCHS48.3X3	S 235	NC8	2000,000	0,35	0,35	0,00
B2653	DİKME - CFCHS48.3X3	S 235	NC8	110,000	0,30	0,30	0,00
B2654	DİKME - CFCHS48.3X3	S 235	NC8	2000,000	0,37	0,37	0,00
B2655	DİKME - CFCHS48.3X3	S 235	NC8	110,000	0,30	0,30	0,00
B2656	DİKME - CFCHS48.3X3	S 235	NC8	2000,000	0,36	0,36	0,00
B2657	DİKME - CFCHS48.3X3	S 235	NC8	110,000	0,32	0,32	0,00
B2658	DİKME - CFCHS48.3X3	S 235	NC8	2000,000	0,37	0,37	0,00
B2659	DİKME - CFCHS48.3X3	S 235	NC8	110,000	0,30	0,30	0,00
B2660	DİKME - CFCHS48.3X3	S 235	NC8	2000,000	0,35	0,35	0,00
B2661	DİKME - CFCHS48.3X3	S 235	NC8	110,000	0,30	0,30	0,00
B2662	ALT_PROFIL - RHS	S 235	NC8	0,000	0,11	0,09	0,11
B2663	ALT_PROFIL - RHS	S 235	NC8	500,000	0,19	0,07	0,19
B2664	ALT_PROFIL - RHS	S 235	NC8	500,000	0,22	0,08	0,22
B2665	ALT_PROFIL - RHS	S 235	NC8	500,000	0,21	0,08	0,21
B2666	ALT_PROFIL - RHS	S 235	NC8	500,000	0,21	0,08	0,21
B2667	ALT_PROFIL - RHS	S 235	NC8	500,000	0,19	0,08	0,19
B2668	ALT_PROFIL - RHS	S 235	NC8	500,000	0,21	0,08	0,21
B2669	ALT_PROFIL - RHS	S 235	NC8	500,000	0,21	0,08	0,21
B2670	DİKME - CFCHS48.3X3	S 235	NC8	2000,000	0,35	0,35	0,00
B2671	DİKME - CFCHS48.3X3	S 235	NC8	110,000	0,29	0,29	0,00
B2672	ALT_PROFIL - RHS	S 235	NC8	500,000	0,22	0,08	0,22
B2673	DİKME - CFCHS48.3X3	S 235	NC8	2000,000	0,32	0,32	0,00
B2674	DİKME - CFCHS48.3X3	S 235	NC8	110,000	0,27	0,27	0,00
B2675	ALT_PROFIL - RHS	S 235	NC8	500,000	0,19	0,07	0,19
B2676	DİKME - CFCHS48.3X3	S 235	NC8	2000,000	0,25	0,25	0,00
B2677	DİKME - CFCHS48.3X3	S 235	NC8	110,000	0,20	0,20	0,00
B2678	ALT_PROFIL - RHS	S 235	NC8	0,000	0,11	0,09	0,11
B2679	ÜST_PROFIL - RHS	S 235	NC5	700,000	0,06	0,05	0,06
B2680	ÜST_PROFIL - RHS	S 235	NC8	700,000	0,10	0,09	0,10
B2681	ÜST_PROFIL - RHS	S 235	NC8	700,000	0,09	0,08	0,09
B2682	ÜST_PROFIL - RHS	S 235	NC8	700,000	0,09	0,09	0,09
B2683	ÜST_PROFIL - RHS	S 235	NC8	700,000	0,09	0,08	0,09
B2684	ÜST_PROFIL - RHS	S 235	NC8	700,000	0,10	0,10	0,10
B2685	ÜST_PROFIL - RHS	S 235	NC8	700,000	0,09	0,08	0,09
B2686	ÜST_PROFIL - RHS	S 235	NC8	700,000	0,09	0,09	0,09
B2687	ÜST_PROFIL - RHS	S 235	NC8	700,000	0,09	0,08	0,09
B2688	ÜST_PROFIL - RHS	S 235	NC8	700,000	0,10	0,09	0,10
B2689	ÜST_PROFIL - RHS	S 235	NC4	700,000	0,06	0,05	0,06
B2690	YATAY - CHS	S 235	NC8	1250,010	0,08	0,08	0,00
B2691	YATAY - CHS	S 235	NC8	1249,990	0,08	0,08	0,00
B2692	YATAY - CHS	S 235	NC8	1249,990	0,08	0,08	0,00
B2693	YATAY - CHS	S 235	NC8	1249,990	0,08	0,08	0,00
B2694	YATAY - CHS	S 235	NC8	1249,990	0,08	0,08	0,00
B2695	YATAY - CHS	S 235	NC8	1249,990	0,08	0,08	0,00
B2696	YATAY - CHS	S 235	NC8	1249,990	0,08	0,08	0,00
B2697	YATAY - CHS	S 235	NC8	1249,990	0,08	0,08	0,00
B2698	YATAY - CHS	S 235	NC8	1249,990	0,08	0,08	0,00
B2699	YATAY - CHS	S 235	NC8	1249,990	0,08	0,08	0,00
B2700	YATAY - CHS	S 235	NC8	1249,990	0,08	0,08	0,00
B2701	YATAY - CHS	S 235	NC8	1249,990	0,08	0,08	0,00
B2702	YATAY - CHS	S 235	NC8	1249,990	0,08	0,08	0,00
B2703	YATAY - CHS	S 235	NC8	1249,990	0,08	0,08	0,00
B2704	YATAY - CHS	S 235	NC8	1249,990	0,08	0,08	0,00
B2705	YATAY - CHS	S 235	NC8	1249,990	0,08	0,08	0,00
B2706	YATAY - CHS	S 235	NC8	1249,990	0,08	0,08	0,00
B2707	YATAY - CHS	S 235	NC8	1249,990	0,08	0,08	0,00
B2708	YATAY - CHS	S 235	NC8	1249,990	0,08	0,08	0,00
B2709	YATAY - CHS	S 235	NC8	1249,990	0,08	0,08	0,00
PL741	Platform - General cross-section	S 235	NC7	1249,990	0,02	0,02	0,02
PL742	Platform - General cross-section	S 235	NC8	1093,750	0,03	0,03	0,03
PL743	Platform - General cross-section	S 235	NC4	1249,990	0,02	0,02	0,02
PL744	Platform - General cross-section	S 235	NC8	1250,010	0,03	0,03	0,03
PL745	Platform - General cross-section	S 235	NC8	1249,990	0,02	0,02	0,02
PL746	Platform - General cross-section	S 235	NC8	2500,000	0,03	0,01	0,03
PL747	Platform - General cross-section	S 235	NC8	1250,010	0,02	0,02	0,02
PL748	Platform - General cross-section	S 235	NC8	2500,000	0,03	0,01	0,03
PL749	Platform - General cross-section	S 235	NC8	1250,010	0,02	0,02	0,02
PL750	Platform - General cross-section	S 235	NC8	2500,000	0,03	0,01	0,03
PL751	Platform - General cross-section	S 235	NC7	1250,010	0,02	0,02	0,02
PL752	Platform - General cross-section	S 235	NC8	1250,010	0,03	0,03	0,03
PL753	Platform - General cross-section	S 235	NC7	1250,010	0,02	0,02	0,02
PL754	Platform - General cross-section	S 235	NC8	1249,990	0,03	0,03	0,03
PL755	Platform - General cross-section	S 235	NC7	1249,990	0,02	0,02	0,02

Member	css	mat	Case	dx [mm]	un.check [-]	sec.check [-]	stab.check [-]
PL756	Platform - General cross-section	S 235	NC8	1250,010	0,03	0,03	0,03
PL757	Platform - General cross-section	S 235	NC4	1250,010	0,02	0,02	0,02
PL758	Platform - General cross-section	S 235	NC8	2500,000	0,03	0,01	0,03
PL759	Platform - General cross-section	S 235	NC7	1249,990	0,02	0,02	0,02
PL760	Platform - General cross-section	S 235	NC8	1406,250	0,03	0,03	0,03
C437	TOPUKLUK - C	S 235	NC8	1250,010	0,24	0,02	0,24
C438	TOPUKLUK - C	S 235	NC8	1249,990	0,07	0,01	0,07
C439	TOPUKLUK - C	S 235	NC8	1249,990	0,06	0,01	0,06
C440	TOPUKLUK - C	S 235	NC8	1249,990	0,06	0,01	0,06
C441	TOPUKLUK - C	S 235	NC8	1249,990	0,13	0,01	0,13
C442	TOPUKLUK - C	S 235	NC8	1250,010	0,13	0,01	0,13
C443	TOPUKLUK - C	S 235	NC8	1250,010	0,06	0,01	0,06
C444	TOPUKLUK - C	S 235	NC8	1250,010	0,06	0,01	0,06
C445	TOPUKLUK - C	S 235	NC8	1250,010	0,07	0,01	0,07
C446	TOPUKLUK - C	S 235	NC8	1249,990	0,24	0,02	0,24
CP302	DIYAGONAL - CHS	S 235	NC8	2957,431	0,08	0,08	0,00
CP303	DIYAGONAL - CHS	S 235	NC8	2957,431	0,08	0,08	0,00
CP304	DIYAGONAL - CHS	S 235	NC8	2957,431	0,09	0,09	0,00
CP305	DIYAGONAL - CHS	S 235	NC8	2957,431	0,09	0,09	0,00
CP306	DIYAGONAL - CHS	S 235	NC8	2957,431	0,08	0,08	0,00
CP307	DIYAGONAL - CHS	S 235	NC8	2957,431	0,08	0,08	0,00
B2710	DİKME - CFCHS48.3X3	S 235	NC8	110,000	0,29	0,29	0,00
B2711	DIKME - CFCHS48.3X3	S 235	NC8	2000,000	0,25	0,25	0,00
B2712	DİKME - CFCHS48.3X3	S 235	NC8	110,000	0,38	0,38	0,00
B2713	DİKME - CFCHS48.3X3	S 235	NC8	0,000	0,32	0,32	0,00
B2714	DİKME - CFCHS48.3X3	S 235	NC8	110,000	0,36	0,36	0,00
B2715	DİKME - CFCHS48.3X3	S 235	NC8	0,000	0,34	0,34	0,00
B2716	DİKME - CFCHS48.3X3	S 235	NC8	110,000	0,38	0,38	0,00
B2717	DİKME - CFCHS48.3X3	S 235	NC8	0,000	0,35	0,35	0,00
B2718	DİKME - CFCHS48.3X3	S 235	NC8	110,000	0,39	0,39	0,00
B2719	DİKME - CFCHS48.3X3	S 235	NC8	0,000	0,36	0,36	0,00
B2720	DİKME - CFCHS48.3X3	S 235	NC8	110,000	0,45	0,45	0,00
B2721	DIKME - CFCHS48.3X3	S 235	NC8	0,000	0,37	0,37	0,00
B2722	DİKME - CFCHS48.3X3	S 235	NC8	110,000	0,39	0,39	0,00
B2723	DİKME - CFCHS48.3X3	S 235	NC8	0,000	0,36	0,36	0,00
B2724	DİKME - CFCHS48.3X3	S 235	NC8	110,000	0,38	0,38	0,00
B2725	DİKME - CFCHS48.3X3	S 235	NC8	0,000	0,35	0,35	0,00
B2726	ALT_PROFIL - RHS	S 235	NC8	200,000	0,17	0,08	0,17
B2727	ALT_PROFIL - RHS	S 235	NC8	200,000	0,18	0,11	0,18
B2728	ALT_PROFIL - RHS	S 235	NC8	200,000	0,19	0,12	0,19
B2729	ALT_PROFIL - RHS	S 235	NC8	200,000	0,18	0,13	0,18
B2730	ALT_PROFIL - RHS	S 235	NC8	700,000	0,19	0,18	0,19
B2731	ALT_PROFIL - RHS	S 235	NC8	200,000	0,17	0,12	0,17
B2732	ALT_PROFIL - RHS	S 235	NC8	700,000	0,19	0,18	0,19
B2733	ALT_PROFIL - RHS	S 235	NC8	200,000	0,18	0,13	0,18
B2734	DIKME - CFCHS48.3X3	S 235	NC8	110,000	0,36	0,36	0,00
B2735	DİKME - CFCHS48.3X3	S 235	NC8	0,000	0,34	0,34	0,00
B2736	ALT_PROFIL - RHS	S 235	NC8	200,000	0,19	0,12	0,19
B2737	DİKME - CFCHS48.3X3	S 235	NC8	110,000	0,38	0,38	0,00
B2738	DİKME - CFCHS48.3X3	S 235	NC8	0,000	0,32	0,32	0,00
B2739	ALT_PROFIL - RHS	S 235	NC8	200,000	0,18	0,11	0,18
B2740	DIKME - CFCHS48.3X3	S 235	NC8	110,000	0,29	0,29	0,00
B2741	DİKME - CFCHS48.3X3	S 235	NC8	2000,000	0,24	0,24	0,00
B2742	ALT_PROFIL - RHS	S 235	NC8	200,000	0,17	0,08	0,17
B2743	ÜST_PROFIL - RHS	S 235	NC8	700,000	0,12	0,10	0,12
B2744	ÜST_PROFIL - RHS	S 235	NC8	0,000	0,12	0,10	0,12
B2745	ÜST_PROFIL - RHS	S 235	NC8	700,000	0,11	0,09	0,11
B2746	ÜST_PROFIL - RHS	S 235	NC8	700,000	0,11	0,10	0,11
B2747	ÜST_PROFIL - RHS	S 235	NC8	700,000	0,13	0,11	0,13
B2748	ÜST_PROFIL - RHS	S 235	NC8	0,000	0,15	0,13	0,15
B2749	ÜST_PROFIL - RHS	S 235	NC8	700,000	0,13	0,11	0,13
B2750	ÜST_PROFIL - RHS	S 235	NC8	700,000	0,11	0,10	0,11
B2751	ÜST_PROFIL - RHS	S 235	NC8	700,000	0,11	0,09	0,11
B2752	ÜST_PROFIL - RHS	S 235	NC8	0,000	0,12	0,10	0,12
B2753	ÜST_PROFIL - RHS	S 235	NC8	700,000	0,13	0,10	0,13
B2754	YATAY - CHS	S 235	NC8	1249,990	0,08	0,08	0,00
B2755	YATAY - CHS	S 235	NC8	1249,990	0,08	0,08	0,00
B2756	YATAY - CHS	S 235	NC8	1249,990	0,08	0,08	0,00
B2757	YATAY - CHS	S 235	NC8	1249,990	0,08	0,08	0,00
B2758	YATAY - CHS	S 235	NC8	1249,990	0,08	0,08	0,00
B2759	YATAY - CHS	S 235	NC8	1249,990	0,08	0,08	0,00
B2760	YATAY - CHS	S 235	NC8	1249,990	0,08	0,08	0,00
B2761	YATAY - CHS	S 235	NC8	1249,990	0,08	0,08	0,00
B2762	YATAY - CHS	S 235	NC8	1249,990	0,08	0,08	0,00
B2763	YATAY - CHS	S 235	NC8	1249,990	0,08	0,08	0,00
B2764	YATAY - CHS	S 235	NC8	1249,990	0,08	0,08	0,00

Member	css	mat	Case	dx [mm]	un.check [-]	sec.check [-]	stab.check [-]
B2765	YATAY - CHS	S 235	NC8	1249,990	0,08	0,08	0,00
B2766	YATAY - CHS	S 235	NC8	1249,990	0,08	0,08	0,00
B2767	YATAY - CHS	S 235	NC8	1249,990	0,08	0,08	0,00
B2768	YATAY - CHS	S 235	NC8	1249,990	0,08	0,08	0,00
B2769	YATAY - CHS	S 235	NC8	1249,990	0,08	0,08	0,00
B2770	YATAY - CHS	S 235	NC8	1249,990	0,08	0,08	0,00
B2771	YATAY - CHS	S 235	NC8	1249,990	0,08	0,08	0,00
B2772	YATAY - CHS	S 235	NC8	1249,990	0,08	0,08	0,00
B2773	YATAY - CHS	S 235	NC8	1249,990	0,08	0,08	0,00
PL761	Platform - General cross-section	S 235	NC8	1562,500	0,03	0,03	0,03
PL762	Platform - General cross-section	S 235	NC8	2500,000	0,04	0,01	0,04
PL763	Platform - General cross-section	S 235	NC8	1249,990	0,04	0,04	0,04
PL764	Platform - General cross-section	S 235	NC8	2500,000	0,04	0,01	0,04
PL765	Platform - General cross-section	S 235	NC8	1093,750	0,03	0,03	0,03
PL766	Platform - General cross-section	S 235	NC8	2500,000	0,04	0,01	0,04
PL767	Platform - General cross-section	S 235	NC8	1249,990	0,03	0,03	0,03
PL768	Platform - General cross-section	S 235	NC8	2500,000	0,03	0,01	0,03
PL769	Platform - General cross-section	S 235	NC8	1250,010	0,03	0,02	0,03
PL770	Platform - General cross-section	S 235	NC8	1562,500	0,03	0,03	0,03
PL771	Platform - General cross-section	S 235	NC8	1249,990	0,03	0,02	0,03
PL772	Platform - General cross-section	S 235	NC8	1249,990	0,03	0,03	0,03
PL773	Platform - General cross-section	S 235	NC8	1250,010	0,03	0,03	0,03
PL774	Platform - General cross-section	S 235	NC8	1250,010	0,03	0,03	0,03
PL775	Platform - General cross-section	S 235	NC8	1406,250	0,03	0,03	0,03
PL776	Platform - General cross-section	S 235	NC8	1250,010	0,04	0,04	0,04
PL777	Platform - General cross-section	S 235	NC8	1250,010	0,04	0,04	0,04
PL778	Platform - General cross-section	S 235	NC8	1250,010	0,04	0,04	0,04
PL779	Platform - General cross-section	S 235	NC8	937,500	0,03	0,03	0,03
PL780	Platform - General cross-section	S 235	NC8	1249,990	0,04	0,04	0,04
C447	TOPUKLUK - C	S 235	NC5	1250,010	0,18	0,01	0,18
C448	TOPUKLUK - C	S 235	NC8	1250,010	0,06	0,01	0,06
C449	TOPUKLUK - C	S 235	NC8	1249,990	0,06	0,01	0,06
C450	TOPUKLUK - C	S 235	NC8	1250,010	0,06	0,01	0,06
C451	TOPUKLUK - C	S 235	NC8	1249,990	0,06	0,01	0,06
C452	TOPUKLUK - C	S 235	NC8	1250,010	0,06	0,01	0,06
C453	TOPUKLUK - C	S 235	NC8	1249,990	0,06	0,01	0,06
C454	TOPUKLUK - C	S 235	NC8	1250,010	0,06	0,01	0,06
C455	TOPUKLUK - C	S 235	NC8	1249,990	0,06	0,01	0,06
C456	TOPUKLUK - C	S 235	NC4	1249,990	0,18	0,01	0,18
CP308	DIYAGONAL - CHS	S 235	NC8	0,000	0,11	0,11	0,00
CP309	DIYAGONAL - CHS	S 235	NC8	0,000	0,12	0,12	0,00
CP310	DIYAGONAL - CHS	S 235	NC8	0,000	0,13	0,13	0,00
CP311	DIYAGONAL - CHS	S 235	NC8	0,000	0,13	0,13	0,00
CP312	DIYAGONAL - CHS	S 235	NC8	0,000	0,12	0,12	0,00
CP313	DIYAGONAL - CHS	S 235	NC8	0,000	0,11	0,11	0,00
B2774	DİKME - CFCHS48.3X3	S 235	NC8	2000,000	0,25	0,25	0,00
B2775	DİKME - CFCHS48.3X3	S 235	NC8	110,000	0,19	0,19	0,00
B2776	DİKME - CFCHS48.3X3	S 235	NC8	2000,000	0,31	0,31	0,00
B2777	DİKME - CFCHS48.3X3	S 235	NC8	110,000	0,26	0,26	0,00
B2778	DİKME - CFCHS48.3X3	S 235	NC8	2000,000	0,35	0,35	0,00
B2779	DİKME - CFCHS48.3X3	S 235	NC8	110,000	0,28	0,28	0,00
B2780	DİKME - CFCHS48.3X3	S 235	NC8	2000,000	0,34	0,34	0,00
B2781	DİKME - CFCHS48.3X3	S 235	NC8	110,000	0,30	0,30	0,00
B2782	DİKME - CFCHS48.3X3	S 235	NC8	2000,000	0,37	0,37	0,00
B2783	DİKME - CFCHS48.3X3	S 235	NC8	110,000	0,30	0,30	0,00
B2784	DİKME - CFCHS48.3X3	S 235	NC8	2000,000	0,36	0,36	0,00
B2785	DİKME - CFCHS48.3X3	S 235	NC8	110,000	0,31	0,31	0,00
B2786	DİKME - CFCHS48.3X3	S 235	NC8	2000,000	0,37	0,37	0,00
B2787	DİKME - CFCHS48.3X3	S 235	NC8	110,000	0,30	0,30	0,00
B2788	DİKME - CFCHS48.3X3	S 235	NC8	2000,000	0,34	0,34	0,00
B2789	DİKME - CFCHS48.3X3	S 235	NC8	110,000	0,30	0,30	0,00
B2790	ALT_PROFIL - RHS	S 235	NC8	0,000	0,11	0,09	0,11
B2791	ALT_PROFIL - RHS	S 235	NC8	500,000	0,19	0,07	0,19
B2792	ALT_PROFIL - RHS	S 235	NC8	500,000	0,22	0,08	0,22
B2793	ALT_PROFIL - RHS	S 235	NC8	500,000	0,20	0,08	0,20
B2794	ALT_PROFIL - RHS	S 235	NC8	500,000	0,21	0,08	0,21
B2795	ALT_PROFIL - RHS	S 235	NC8	500,000	0,19	0,08	0,19
B2796	ALT_PROFIL - RHS	S 235	NC8	500,000	0,21	0,08	0,21
B2797	ALT_PROFIL - RHS	S 235	NC8	500,000	0,20	0,07	0,20
B2798	DİKME - CFCHS48.3X3	S 235	NC8	2000,000	0,35	0,35	0,00
B2799	DİKME - CFCHS48.3X3	S 235	NC8	110,000	0,28	0,28	0,00
B2800	ALT_PROFIL - RHS	S 235	NC8	500,000	0,22	0,08	0,22
B2801	DİKME - CFCHS48.3X3	S 235	NC8	2000,000	0,31	0,31	0,00
B2802	DİKME - CFCHS48.3X3	S 235	NC8	110,000	0,26	0,26	0,00
B2803	ALT_PROFIL - RHS	S 235	NC8	500,000	0,19	0,07	0,19
B2804	DİKME - CFCHS48.3X3	S 235	NC8	2000,000	0,25	0,25	0,00

Member	css	mat	Case	dx [mm]	un.check [-]	sec.check [-]	stab.check [-]
B2805	DİKME - CFCHS48.3X3	S 235	NC8	110,000	0,19	0,19	0,00
B2806	ALT_PROFIL - RHS	S 235	NC8	0,000	0,11	0,09	0,11
B2807	ÜST_PROFIL - RHS	S 235	NC5	700,000	0,06	0,05	0,06
B2808	ÜST_PROFIL - RHS	S 235	NC8	700,000	0,10	0,08	0,10
B2809	ÜST_PROFIL - RHS	S 235	NC8	700,000	0,09	0,08	0,09
B2810	ÜST_PROFIL - RHS	S 235	NC8	700,000	0,09	0,09	0,09
B2811	ÜST_PROFIL - RHS	S 235	NC8	700,000	0,09	0,08	0,09
B2812	ÜST_PROFIL - RHS	S 235	NC8	700,000	0,10	0,10	0,10
B2813	ÜST_PROFIL - RHS	S 235	NC8	700,000	0,09	0,08	0,09
B2814	ÜST_PROFIL - RHS	S 235	NC8	700,000	0,09	0,09	0,09
B2815	ÜST_PROFIL - RHS	S 235	NC8	700,000	0,09	0,08	0,09
B2816	ÜST_PROFIL - RHS	S 235	NC8	700,000	0,10	0,08	0,10
B2817	ÜST_PROFIL - RHS	S 235	NC4	700,000	0,06	0,05	0,06
B2818	YATAY - CHS	S 235	NC8	1249,990	0,08	0,08	0,00
B2819	YATAY - CHS	S 235	NC8	1249,990	0,08	0,08	0,00
B2820	YATAY - CHS	S 235	NC8	1249,990	0,08	0,08	0,00
B2821	YATAY - CHS	S 235	NC8	1249,990	0,08	0,08	0,00
B2822	YATAY - CHS	S 235	NC8	1249,990	0,08	0,08	0,00
B2823	YATAY - CHS	S 235	NC8	1249,990	0,08	0,08	0,00
B2824	YATAY - CHS	S 235	NC8	1249,990	0,08	0,08	0,00
B2825	YATAY - CHS	S 235	NC8	1249,990	0,08	0,08	0,00
B2826	YATAY - CHS	S 235	NC8	1249,990	0,08	0,08	0,00
B2827	YATAY - CHS	S 235	NC8	1249,990	0,08	0,08	0,00
B2828	YATAY - CHS	S 235	NC8	1249,990	0,08	0,08	0,00
B2829	YATAY - CHS	S 235	NC8	1249,990	0,08	0,08	0,00
B2830	YATAY - CHS	S 235	NC8	1249,990	0,08	0,08	0,00
B2831	YATAY - CHS	S 235	NC8	1249,990	0,08	0,08	0,00
B2832	YATAY - CHS	S 235	NC8	1249,990	0,08	0,08	0,00
B2833	YATAY - CHS	S 235	NC8	1249,990	0,08	0,08	0,00
B2834	YATAY - CHS	S 235	NC8	1249,990	0,08	0,08	0,00
B2835	YATAY - CHS	S 235	NC8	1249,990	0,08	0,08	0,00
B2836	YATAY - CHS	S 235	NC8	1249,990	0,08	0,08	0,00
B2837	YATAY - CHS	S 235	NC8	1249,990	0,08	0,08	0,00
PL781	Platform - General cross-section	S 235	NC7	1249,990	0,02	0,02	0,02
PL782	Platform - General cross-section	S 235	NC8	1093,750	0,03	0,03	0,03
PL783	Platform - General cross-section	S 235	NC4	1249,990	0,02	0,02	0,02
PL784	Platform - General cross-section	S 235	NC8	1249,990	0,03	0,03	0,03
PL785	Platform - General cross-section	S 235	NC8	1249,990	0,02	0,02	0,02
PL786	Platform - General cross-section	S 235	NC8	2500,000	0,03	0,01	0,03
PL787	Platform - General cross-section	S 235	NC8	1250,010	0,02	0,02	0,02
PL788	Platform - General cross-section	S 235	NC8	2500,000	0,03	0,01	0,03
PL789	Platform - General cross-section	S 235	NC8	1250,010	0,02	0,02	0,02
PL790	Platform - General cross-section	S 235	NC8	2500,000	0,03	0,01	0,03
PL791	Platform - General cross-section	S 235	NC7	1250,010	0,02	0,02	0,02
PL792	Platform - General cross-section	S 235	NC8	1250,010	0,03	0,03	0,03
PL793	Platform - General cross-section	S 235	NC7	1250,010	0,02	0,02	0,02
PL794	Platform - General cross-section	S 235	NC8	1249,990	0,03	0,03	0,03
PL795	Platform - General cross-section	S 235	NC7	1249,990	0,02	0,02	0,02
PL796	Platform - General cross-section	S 235	NC8	1250,010	0,03	0,03	0,03
PL797	Platform - General cross-section	S 235	NC4	1250,010	0,02	0,02	0,02
PL798	Platform - General cross-section	S 235	NC8	1249,990	0,03	0,03	0,03
PL799	Platform - General cross-section	S 235	NC2	1249,990	0,02	0,02	0,02
PL800	Platform - General cross-section	S 235	NC8	1406,250	0,03	0,03	0,03
C457	TOPUKLUK - C	S 235	NC8	1250,010	0,25	0,02	0,25
C458	TOPUKLUK - C	S 235	NC8	1249,990	0,07	0,01	0,07
C459	TOPUKLUK - C	S 235	NC8	1249,990	0,06	0,01	0,06
C460	TOPUKLUK - C	S 235	NC8	1249,990	0,06	0,01	0,06
C461	TOPUKLUK - C	S 235	NC8	1249,990	0,13	0,01	0,13
C462	TOPUKLUK - C	S 235	NC8	1250,010	0,12	0,01	0,12
C463	TOPUKLUK - C	S 235	NC8	1250,010	0,06	0,01	0,06
C464	TOPUKLUK - C	S 235	NC8	1250,010	0,06	0,01	0,06
C465	TOPUKLUK - C	S 235	NC8	1250,010	0,07	0,01	0,07
C466	TOPUKLUK - C	S 235	NC8	1249,990	0,24	0,02	0,24
CP314	DIYAGONAL - CHS	S 235	NC8	2957,431	0,08	0,08	0,00
CP315	DIYAGONAL - CHS	S 235	NC8	2957,431	0,08	0,08	0,00
CP316	DIYAGONAL - CHS	S 235	NC8	2957,431	0,09	0,09	0,00
CP317	DIYAGONAL - CHS	S 235	NC8	2957,431	0,09	0,09	0,00
CP318	DIYAGONAL - CHS	S 235	NC8	2957,431	0,08	0,08	0,00
CP319	DIYAGONAL - CHS	S 235	NC8	2957,431	0,08	0,08	0,00
B2838	DİKME - CFCHS48.3X3	S 235	NC8	110,000	0,29	0,29	0,00
B2839	DİKME - CFCHS48.3X3	S 235	NC8	2000,000	0,24	0,24	0,00
B2840	DİKME - CFCHS48.3X3	S 235	NC8	110,000	0,38	0,38	0,00
B2841	DİKME - CFCHS48.3X3	S 235	NC8	0,000	0,32	0,32	0,00
B2842	DİKME - CFCHS48.3X3	S 235	NC8	110,000	0,36	0,36	0,00
B2843	DİKME - CFCHS48.3X3	S 235	NC8	0,000	0,33	0,33	0,00
B2844	DİKME - CFCHS48.3X3	S 235	NC8	110,000	0,37	0,37	0,00

Member	css	mat	Case	dx [mm]	un.check [-]	sec.check [-]	stab.check [-]
B2845	DİKME - CFCHS48.3X3	S 235	NC8	0,000	0,35	0,35	0,00
B2846	DİKME - CFCHS48.3X3	S 235	NC8	110,000	0,39	0,39	0,00
B2847	DİKME - CFCHS48.3X3	S 235	NC8	0,000	0,35	0,35	0,00
B2848	DİKME - CFCHS48.3X3	S 235	NC8	110,000	0,45	0,45	0,00
B2849	DİKME - CFCHS48.3X3	S 235	NC8	0,000	0,36	0,36	0,00
B2850	DİKME - CFCHS48.3X3	S 235	NC8	110,000	0,39	0,39	0,00
B2851	DİKME - CFCHS48.3X3	S 235	NC8	0,000	0,35	0,35	0,00
B2852	DİKME - CFCHS48.3X3	S 235	NC8	110,000	0,37	0,37	0,00
B2853	DİKME - CFCHS48.3X3	S 235	NC8	0,000	0,35	0,35	0,00
B2854	ALT_PROFIL - RHS	S 235	NC8	200,000	0,17	0,08	0,17
B2855	ALT_PROFIL - RHS	S 235	NC8	200,000	0,18	0,11	0,18
B2856	ALT_PROFIL - RHS	S 235	NC8	200,000	0,18	0,12	0,18
B2857	ALT_PROFIL - RHS	S 235	NC8	200,000	0,18	0,13	0,18
B2858	ALT_PROFIL - RHS	S 235	NC8	700,000	0,19	0,18	0,19
B2859	ALT_PROFIL - RHS	S 235	NC8	200,000	0,17	0,12	0,17
B2860	ALT_PROFIL - RHS	S 235	NC8	700,000	0,19	0,18	0,19
B2861	ALT_PROFIL - RHS	S 235	NC8	200,000	0,18	0,13	0,18
B2862	DİKME - CFCHS48.3X3	S 235	NC8	110,000	0,36	0,36	0,00
B2863	DİKME - CFCHS48.3X3	S 235	NC8	0,000	0,33	0,33	0,00
B2864	ALT_PROFIL - RHS	S 235	NC8	200,000	0,19	0,12	0,19
B2865	DİKME - CFCHS48.3X3	S 235	NC8	110,000	0,38	0,38	0,00
B2866	DİKME - CFCHS48.3X3	S 235	NC8	0,000	0,32	0,32	0,00
B2867	ALT_PROFIL - RHS	S 235	NC8	200,000	0,18	0,11	0,18
B2868	DİKME - CFCHS48.3X3	S 235	NC8	110,000	0,29	0,29	0,00
B2869	DİKME - CFCHS48.3X3	S 235	NC8	2000,000	0,24	0,24	0,00
B2870	ALT_PROFIL - RHS	S 235	NC8	200,000	0,17	0,08	0,17
B2871	ÜST_PROFIL - RHS	S 235	NC8	700,000	0,13	0,10	0,13
B2872	ÜST_PROFIL - RHS	S 235	NC8	0,000	0,12	0,10	0,12
B2873	ÜST_PROFIL - RHS	S 235	NC8	700,000	0,11	0,09	0,11
B2874	ÜST_PROFIL - RHS	S 235	NC8	700,000	0,11	0,10	0,11
B2875	ÜST_PROFIL - RHS	S 235	NC8	700,000	0,13	0,11	0,13
B2876	ÜST_PROFIL - RHS	S 235	NC8	0,000	0,15	0,13	0,15
B2877	ÜST_PROFIL - RHS	S 235	NC8	700,000	0,13	0,11	0,13
B2878	ÜST_PROFIL - RHS	S 235	NC8	700,000	0,11	0,10	0,11
B2879	ÜST_PROFIL - RHS	S 235	NC8	700,000	0,11	0,09	0,11
B2880	ÜST_PROFIL - RHS	S 235	NC8	0,000	0,12	0,10	0,12
B2881	ÜST_PROFIL - RHS	S 235	NC8	700,000	0,13	0,10	0,13
B2882	YATAY - CHS	S 235	NC8	1249,990	0,08	0,08	0,00
B2883	YATAY - CHS	S 235	NC8	1249,990	0,08	0,08	0,00
B2884	YATAY - CHS	S 235	NC8	1249,990	0,08	0,08	0,00
B2885	YATAY - CHS	S 235	NC8	1249,990	0,08	0,08	0,00
B2886	YATAY - CHS	S 235	NC8	1249,990	0,08	0,08	0,00
B2887	YATAY - CHS	S 235	NC8	1249,990	0,08	0,08	0,00
B2888	YATAY - CHS	S 235	NC8	1249,990	0,08	0,08	0,00
B2889	YATAY - CHS	S 235	NC8	1249,990	0,08	0,08	0,00
B2890	YATAY - CHS	S 235	NC8	1249,990	0,08	0,08	0,00
B2891	YATAY - CHS	S 235	NC8	1249,990	0,08	0,08	0,00
B2892	YATAY - CHS	S 235	NC8	1249,990	0,08	0,08	0,00
B2893	YATAY - CHS	S 235	NC8	1249,990	0,08	0,08	0,00
B2894	YATAY - CHS	S 235	NC8	1249,990	0,08	0,08	0,00
B2895	YATAY - CHS	S 235	NC8	1249,990	0,08	0,08	0,00
B2896	YATAY - CHS	S 235	NC8	1249,990	0,08	0,08	0,00
B2897	YATAY - CHS	S 235	NC8	1249,990	0,08	0,08	0,00
B2898	YATAY - CHS	S 235	NC8	1249,990	0,08	0,08	0,00
B2899	YATAY - CHS	S 235	NC8	1249,990	0,08	0,08	0,00
B2900	YATAY - CHS	S 235	NC8	1249,990	0,08	0,08	0,00
B2901	YATAY - CHS	S 235	NC8	1249,990	0,08	0,08	0,00
PL801	Platform - General cross-section	S 235	NC8	1562,500	0,03	0,03	0,03
PL802	Platform - General cross-section	S 235	NC8	2500,000	0,04	0,01	0,04
PL803	Platform - General cross-section	S 235	NC8	1249,990	0,04	0,04	0,04
PL804	Platform - General cross-section	S 235	NC8	2500,000	0,04	0,01	0,04
PL805	Platform - General cross-section	S 235	NC8	1093,750	0,03	0,03	0,03
PL806	Platform - General cross-section	S 235	NC8	2500,000	0,04	0,01	0,04
PL807	Platform - General cross-section	S 235	NC8	1249,990	0,03	0,03	0,03
PL808	Platform - General cross-section	S 235	NC8	2500,000	0,03	0,01	0,03
PL809	Platform - General cross-section	S 235	NC8	1250,010	0,03	0,02	0,03
PL810	Platform - General cross-section	S 235	NC8	1562,500	0,03	0,03	0,03
PL811	Platform - General cross-section	S 235	NC8	1249,990	0,03	0,02	0,03
PL812	Platform - General cross-section	S 235	NC8	1249,990	0,03	0,03	0,03
PL813	Platform - General cross-section	S 235	NC8	1250,010	0,03	0,03	0,03
PL814	Platform - General cross-section	S 235	NC8	1250,010	0,03	0,03	0,03
PL815	Platform - General cross-section	S 235	NC8	1406,250	0,03	0,03	0,03
PL816	Platform - General cross-section	S 235	NC8	1250,010	0,04	0,04	0,04
PL817	Platform - General cross-section	S 235	NC8	1250,010	0,04	0,04	0,04
PL818	Platform - General cross-section	S 235	NC8	1250,010	0,04	0,04	0,04
PL819	Platform - General cross-section	S 235	NC8	937,500	0,03	0,03	0,03

Member	css	mat	Case	dx [mm]	un.check [-]	sec.check [-]	stab.check [-]
PL820	Platform - General cross-section	S 235	NC8	1249,990	0,04	0,04	0,04
C467	TOPUKLUK - C	S 235	NC5	1250,010	0,19	0,01	0,19
C468	TOPUKLUK - C	S 235	NC8	1250,010	0,06	0,01	0,06
C469	TOPUKLUK - C	S 235	NC8	1249,990	0,06	0,01	0,06
C470	TOPUKLUK - C	S 235	NC8	1250,010	0,06	0,01	0,06
C471	TOPUKLUK - C	S 235	NC8	1249,990	0,06	0,01	0,06
C472	TOPUKLUK - C	S 235	NC8	1250,010	0,06	0,01	0,06
C473	TOPUKLUK - C	S 235	NC8	1249,990	0,06	0,01	0,06
C474	TOPUKLUK - C	S 235	NC8	1250,010	0,06	0,01	0,06
C475	TOPUKLUK - C	S 235	NC8	1249,990	0,06	0,01	0,06
C476	TOPUKLUK - C	S 235	NC4	1249,990	0,19	0,01	0,19
CP320	DIYAGONAL - CHS	S 235	NC8	0,000	0,10	0,10	0,00
CP321	DIYAGONAL - CHS	S 235	NC8	0,000	0,12	0,12	0,00
CP322	DIYAGONAL - CHS	S 235	NC8	0,000	0,13	0,13	0,00
CP323	DIYAGONAL - CHS	S 235	NC8	0,000	0,13	0,13	0,00
CP324	DIYAGONAL - CHS	S 235	NC8	0,000	0,12	0,12	0,00
CP325	DIYAGONAL - CHS	S 235	NC8	0,000	0,10	0,10	0,00
B2902	DİKME - CFCHS48.3X3	S 235	NC8	2000,000	0,25	0,25	0,00
B2903	DİKME - CFCHS48.3X3	S 235	NC8	110,000	0,19	0,19	0,00
B2904	DİKME - CFCHS48.3X3	S 235	NC8	2000,000	0,31	0,31	0,00
B2905	DIKME - CFCHS48.3X3	S 235	NC8	110,000	0,26	0,26	0,00
B2906	DİKME - CFCHS48.3X3	S 235	NC8	2000,000	0,34	0,34	0,00
B2907	DIKME - CFCHS48.3X3	S 235	NC8	110,000	0,28	0,28	0,00
B2908	DİKME - CFCHS48.3X3	S 235	NC8	2000,000	0,34	0,34	0,00
B2909	DİKME - CFCHS48.3X3	S 235	NC8	110,000	0,29	0,29	0,00
B2910	DİKME - CFCHS48.3X3	S 235	NC8	2000,000	0,36	0,36	0,00
B2911	DİKME - CFCHS48.3X3	S 235	NC8	110,000	0,29	0,29	0,00
B2912	DİKME - CFCHS48.3X3	S 235	NC8	2000,000	0,35	0,35	0,00
B2913	DİKME - CFCHS48.3X3	S 235	NC8	110,000	0,30	0,30	0,00
B2914	DİKME - CFCHS48.3X3	S 235	NC8	2000,000	0,36	0,36	0,00
B2915	DİKME - CFCHS48.3X3	S 235	NC8	110,000	0,29	0,29	0,00
B2916	DİKME - CFCHS48.3X3	S 235	NC8	2000,000	0,34	0,34	0,00
B2917	DIKME - CFCHS48.3X3	S 235	NC8	110,000	0,29	0,29	0,00
B2918	ALT_PROFIL - RHS	S 235	NC8	0,000	0,10	0,08	0,10
B2919	ALT_PROFIL - RHS	S 235	NC8	500,000	0,19	0,07	0,19
B2920	ALT_PROFIL - RHS	S 235	NC8	500,000	0,21	0,08	0,21
B2921	ALT_PROFIL - RHS	S 235	NC8	500,000	0,20	0,08	0,20
B2922	ALT_PROFIL - RHS	S 235	NC8	500,000	0,21	0,07	0,21
B2923	ALT_PROFIL - RHS	S 235	NC8	500,000	0,19	0,07	0,19
B2924	ALT_PROFIL - RHS	S 235	NC8	500,000	0,21	0,07	0,21
B2925	ALT_PROFIL - RHS	S 235	NC8	500,000	0,20	0,07	0,20
B2926	DİKME - CFCHS48.3X3	S 235	NC8	2000,000	0,34	0,34	0,00
B2927	DİKME - CFCHS48.3X3	S 235	NC8	110,000	0,28	0,28	0,00
B2928	ALT_PROFIL - RHS	S 235	NC8	500,000	0,21	0,08	0,21
B2929	DİKME - CFCHS48.3X3	S 235	NC8	2000,000	0,31	0,31	0,00
B2930	DIKME - CFCHS48.3X3	S 235	NC8	110,000	0,26	0,26	0,00
B2931	ALT_PROFIL - RHS	S 235	NC8	500,000	0,19	0,07	0,19
B2932	DIKME - CFCHS48.3X3	S 235	NC8	2000,000	0,24	0,24	0,00
B2933	DİKME - CFCHS48.3X3	S 235	NC8	110,000	0,19	0,19	0,00
B2934	ALT_PROFIL - RHS	S 235	NC8	0,000	0,10	0,08	0,10
B2935	ÜST_PROFIL - RHS	S 235	NC5	700,000	0,06	0,05	0,06
B2936	ÜST_PROFIL - RHS	S 235	NC8	700,000	0,10	0,08	0,10
B2937	ÜST_PROFIL - RHS	S 235	NC8	700,000	0,09	0,08	0,09
B2938	ÜST_PROFIL - RHS	S 235	NC8	700,000	0,09	0,08	0,09
B2939	ÜST_PROFIL - RHS	S 235	NC8	700,000	0,09	0,08	0,09
B2940	ÜST_PROFIL - RHS	S 235	NC8	700,000	0,10	0,09	0,10
B2941	ÜST_PROFIL - RHS	S 235	NC8	700,000	0,09	0,08	0,09
B2942	ÜST_PROFIL - RHS	S 235	NC8	700,000	0,09	0,08	0,09
B2943	ÜST_PROFIL - RHS	S 235	NC8	700,000	0,09	0,08	0,09
B2944	ÜST_PROFIL - RHS	S 235	NC8	700,000	0,10	0,08	0,10
B2945	ÜST_PROFIL - RHS	S 235	NC4	700,000	0,06	0,05	0,06
B2946	YATAY - CHS	S 235	NC8	1249,990	0,08	0,08	0,00
B2947	YATAY - CHS	S 235	NC8	1249,990	0,08	0,08	0,00
B2948	YATAY - CHS	S 235	NC8	1249,990	0,08	0,08	0,00
B2949	YATAY - CHS	S 235	NC8	1249,990	0,08	0,08	0,00
B2950	YATAY - CHS	S 235	NC8	1249,990	0,08	0,08	0,00
B2951	YATAY - CHS	S 235	NC8	1249,990	0,08	0,08	0,00
B2952	YATAY - CHS	S 235	NC8	1249,990	0,08	0,08	0,00
B2953	YATAY - CHS	S 235	NC8	1249,990	0,08	0,08	0,00
B2954	YATAY - CHS	S 235	NC8	1249,990	0,08	0,08	0,00
B2955	YATAY - CHS	S 235	NC8	1249,990	0,08	0,08	0,00
B2956	YATAY - CHS	S 235	NC8	1249,990	0,08	0,08	0,00
B2957	YATAY - CHS	S 235	NC8	1249,990	0,08	0,08	0,00
B2958	YATAY - CHS	S 235	NC8	1249,990	0,08	0,08	0,00
B2959	YATAY - CHS	S 235	NC8	1249,990	0,08	0,08	0,00
B2960	YATAY - CHS	S 235	NC8	1249,990	0,08	0,08	0,00

Member	css	mat	Case	dx [mm]	un.check [-]	sec.check [-]	stab.check [-]
B2961	YATAY - CHS	S 235	NC8	1249,990	0,08	0,08	0,00
B2962	YATAY - CHS	S 235	NC8	1249,990	0,08	0,08	0,00
B2963	YATAY - CHS	S 235	NC8	1249,990	0,08	0,08	0,00
B2964	YATAY - CHS	S 235	NC8	1249,990	0,08	0,08	0,00
B2965	YATAY - CHS	S 235	NC8	1249,990	0,08	0,08	0,00
PL821	Platform - General cross-section	S 235	NC4	1250,010	0,02	0,02	0,02
PL822	Platform - General cross-section	S 235	NC8	1093,750	0,03	0,03	0,03
PL823	Platform - General cross-section	S 235	NC4	1249,990	0,02	0,02	0,02
PL824	Platform - General cross-section	S 235	NC8	2187,500	0,03	0,01	0,03
PL825	Platform - General cross-section	S 235	NC8	1249,990	0,02	0,02	0,02
PL826	Platform - General cross-section	S 235	NC8	2500,000	0,03	0,01	0,03
PL827	Platform - General cross-section	S 235	NC8	1250,010	0,02	0,02	0,02
PL828	Platform - General cross-section	S 235	NC8	2500,000	0,03	0,01	0,03
PL829	Platform - General cross-section	S 235	NC8	1250,010	0,02	0,02	0,02
PL830	Platform - General cross-section	S 235	NC8	2500,000	0,03	0,01	0,03
PL831	Platform - General cross-section	S 235	NC7	1250,010	0,02	0,02	0,02
PL832	Platform - General cross-section	S 235	NC8	1250,010	0,03	0,03	0,03
PL833	Platform - General cross-section	S 235	NC7	1250,010	0,02	0,02	0,02
PL834	Platform - General cross-section	S 235	NC8	1249,990	0,03	0,03	0,03
PL835	Platform - General cross-section	S 235	NC7	1249,990	0,02	0,02	0,02
PL836	Platform - General cross-section	S 235	NC8	1250,010	0,03	0,03	0,03
PL837	Platform - General cross-section	S 235	NC4	1250,010	0,02	0,02	0,02
PL838	Platform - General cross-section	S 235	NC8	1250,010	0,03	0,03	0,03
PL839	Platform - General cross-section	S 235	NC2	1249,990	0,02	0,02	0,02
PL840	Platform - General cross-section	S 235	NC8	1406,250	0,03	0,03	0,03
C477	TOPUKLUK - C	S 235	NC8	1250,010	0,25	0,02	0,25
C478	TOPUKLUK - C	S 235	NC8	1249,990	0,07	0,01	0,07
C479	TOPUKLUK - C	S 235	NC8	1249,990	0,06	0,01	0,06
C480	TOPUKLUK - C	S 235	NC8	1249,990	0,06	0,01	0,06
C481	TOPUKLUK - C	S 235	NC8	1249,990	0,12	0,01	0,12
C482	TOPUKLUK - C	S 235	NC8	1250,010	0,12	0,01	0,12
C483	TOPUKLUK - C	S 235	NC8	1250,010	0,06	0,01	0,06
C484	TOPUKLUK - C	S 235	NC8	1250,010	0,06	0,01	0,06
C485	TOPUKLUK - C	S 235	NC8	1250,010	0,07	0,01	0,07
C486	TOPUKLUK - C	S 235	NC8	1249,990	0,24	0,02	0,24
CP326	DIYAGONAL - CHS	S 235	NC8	2957,431	0,08	0,08	0,00
CP327	DIYAGONAL - CHS	S 235	NC8	2957,431	0,08	0,08	0,00
CP328	DIYAGONAL - CHS	S 235	NC8	2957,431	0,09	0,09	0,00
CP329	DIYAGONAL - CHS	S 235	NC8	2957,431	0,09	0,09	0,00
CP330	DIYAGONAL - CHS	S 235	NC8	2957,431	0,08	0,08	0,00
CP331	DIYAGONAL - CHS	S 235	NC8	2957,431	0,08	0,08	0,00
B2966	DİKME - CFCHS48.3X3	S 235	NC8	110,000	0,28	0,28	0,00
B2967	DİKME - CFCHS48.3X3	S 235	NC8	2000,000	0,24	0,24	0,00
B2968	DİKME - CFCHS48.3X3	S 235	NC8	110,000	0,38	0,38	0,00
B2969	DİKME - CFCHS48.3X3	S 235	NC8	0,000	0,31	0,31	0,00
B2970	DIKME - CFCHS48.3X3	S 235	NC8	110,000	0,36	0,36	0,00
B2971	DİKME - CFCHS48.3X3	S 235	NC8	0,000	0,33	0,33	0,00
B2972	DIKME - CFCHS48.3X3	S 235	NC8	110,000	0,37	0,37	0,00
B2973	DİKME - CFCHS48.3X3	S 235	NC8	0,000	0,34	0,34	0,00
B2974	DİKME - CFCHS48.3X3	S 235	NC8	110,000	0,39	0,39	0,00
B2975	DİKME - CFCHS48.3X3	S 235	NC8	0,000	0,35	0,35	0,00
B2976	DIKME - CFCHS48.3X3	S 235	NC8	110,000	0,44	0,44	0,00
B2977	DİKME - CFCHS48.3X3	S 235	NC8	0,000	0,36	0,36	0,00
B2978	DIKME - CFCHS48.3X3	S 235	NC8	110,000	0,39	0,39	0,00
B2979	DİKME - CFCHS48.3X3	S 235	NC8	0,000	0,35	0,35	0,00
B2980	DİKME - CFCHS48.3X3	S 235	NC8	110,000	0,37	0,37	0,00
B2981	DİKME - CFCHS48.3X3	S 235	NC8	0,000	0,34	0,34	0,00
B2982	ALT_PROFIL - RHS	S 235	NC8	200,000	0,17	0,08	0,17
B2983	ALT_PROFIL - RHS	S 235	NC8	200,000	0,18	0,11	0,18
B2984	ALT_PROFIL - RHS	S 235	NC8	200,000	0,18	0,12	0,18
B2985	ALT_PROFIL - RHS	S 235	NC8	200,000	0,18	0,13	0,18
B2986	ALT_PROFIL - RHS	S 235	NC8	700,000	0,19	0,18	0,19
B2987	ALT_PROFIL - RHS	S 235	NC8	200,000	0,17	0,12	0,17
B2988	ALT_PROFIL - RHS	S 235	NC8	700,000	0,19	0,18	0,19
B2989	ALT_PROFIL - RHS	S 235	NC8	200,000	0,18	0,13	0,18
B2990	DİKME - CFCHS48.3X3	S 235	NC8	110,000	0,36	0,36	0,00
B2991	DIKME - CFCHS48.3X3	S 235	NC8	0,000	0,33	0,33	0,00
B2992	ALT_PROFIL - RHS	S 235	NC8	200,000	0,18	0,12	0,18
B2993	DIKME - CFCHS48.3X3	S 235	NC8	110,000	0,38	0,38	0,00
B2994	DİKME - CFCHS48.3X3	S 235	NC8	0,000	0,31	0,31	0,00
B2995	ALT_PROFIL - RHS	S 235	NC8	200,000	0,18	0,11	0,18
B2996	DİKME - CFCHS48.3X3	S 235	NC8	110,000	0,28	0,28	0,00
B2997	DİKME - CFCHS48.3X3	S 235	NC8	2000,000	0,24	0,24	0,00
B2998	ALT_PROFIL - RHS	S 235	NC8	200,000	0,17	0,08	0,17
B2999	UST_PROFIL - RHS	S 235	NC8	700,000	0,13	0,10	0,13
B3000	ÜST_PROFIL - RHS	S 235	NC8	0,000	0,12	0,10	0,12

Member	css	mat	Case	dx [mm]	un.check [-]	sec.check [-]	stab.check [-]
B3001	ÜST_PROFIL - RHS	S 235	NC8	700,000	0,11	0,09	0,11
B3002	ÜST_PROFIL - RHS	S 235	NC8	700,000	0,11	0,10	0,11
B3003	ÜST_PROFIL - RHS	S 235	NC8	700,000	0,13	0,11	0,13
B3004	ÜST_PROFIL - RHS	S 235	NC8	0,000	0,15	0,13	0,15
B3005	ÜST_PROFIL - RHS	S 235	NC8	700,000	0,13	0,11	0,13
B3006	ÜST_PROFIL - RHS	S 235	NC8	700,000	0,11	0,10	0,11
B3007	ÜST_PROFIL - RHS	S 235	NC8	700,000	0,11	0,09	0,11
B3008	ÜST_PROFIL - RHS	S 235	NC8	0,000	0,12	0,10	0,12
B3009	ÜST_PROFIL - RHS	S 235	NC8	700,000	0,13	0,10	0,13
B3010	YATAY - CHS	S 235	NC8	1249,990	0,08	0,08	0,00
B3011	YATAY - CHS	S 235	NC8	1249,990	0,08	0,08	0,00
B3012	YATAY - CHS	S 235	NC8	1249,990	0,08	0,08	0,00
B3013	YATAY - CHS	S 235	NC8	1249,990	0,08	0,08	0,00
B3014	YATAY - CHS	S 235	NC8	1249,990	0,08	0,08	0,00
B3015	YATAY - CHS	S 235	NC8	1249,990	0,08	0,08	0,00
B3016	YATAY - CHS	S 235	NC8	1249,990	0,08	0,08	0,00
B3017	YATAY - CHS	S 235	NC8	1249,990	0,08	0,08	0,00
B3018	YATAY - CHS	S 235	NC8	1249,990	0,08	0,08	0,00
B3019	YATAY - CHS	S 235	NC8	1249,990	0,08	0,08	0,00
B3020	YATAY - CHS	S 235	NC8	1249,990	0,08	0,08	0,00
B3021	YATAY - CHS	S 235	NC8	1249,990	0,08	0,08	0,00
B3022	YATAY - CHS	S 235	NC8	1249,990	0,08	0,08	0,00
B3023	YATAY - CHS	S 235	NC8	1249,990	0,08	0,08	0,00
B3024	YATAY - CHS	S 235	NC8	1249,990	0,08	0,08	0,00
B3025	YATAY - CHS	S 235	NC8	1249,990	0,08	0,08	0,00
B3026	YATAY - CHS	S 235	NC8	1249,990	0,08	0,08	0,00
B3027	YATAY - CHS	S 235	NC8	1249,990	0,08	0,08	0,00
B3028	YATAY - CHS	S 235	NC8	1249,990	0,08	0,08	0,00
B3029	YATAY - CHS	S 235	NC8	1249,990	0,08	0,08	0,00
PL841	Platform - General cross-section	S 235	NC8	1562,500	0,03	0,03	0,03
PL842	Platform - General cross-section	S 235	NC8	2500,000	0,04	0,01	0,04
PL843	Platform - General cross-section	S 235	NC8	1249,990	0,04	0,04	0,04
PL844	Platform - General cross-section	S 235	NC8	2500,000	0,04	0,01	0,04
PL845	Platform - General cross-section	S 235	NC8	1093,750	0,03	0,03	0,03
PL846	Platform - General cross-section	S 235	NC8	2500,000	0,04	0,01	0,04
PL847	Platform - General cross-section	S 235	NC8	1249,990	0,03	0,03	0,03
PL848	Platform - General cross-section	S 235	NC8	2500,000	0,03	0,01	0,03
PL849	Platform - General cross-section	S 235	NC8	1250,010	0,02	0,02	0,02
PL850	Platform - General cross-section	S 235	NC8	1406,250	0,03	0,03	0,03
PL851	Platform - General cross-section	S 235	NC8	1249,990	0,02	0,02	0,02
PL852	Platform - General cross-section	S 235	NC8	1249,990	0,03	0,03	0,03
PL853	Platform - General cross-section	S 235	NC8	1250,010	0,03	0,03	0,03
PL854	Platform - General cross-section	S 235	NC8	1250,010	0,03	0,03	0,03
PL855	Platform - General cross-section	S 235	NC8	1406,250	0,03	0,03	0,03
PL856	Platform - General cross-section	S 235	NC8	1250,010	0,04	0,04	0,04
PL857	Platform - General cross-section	S 235	NC8	1250,010	0,04	0,04	0,04
PL858	Platform - General cross-section	S 235	NC8	1250,010	0,04	0,04	0,04
PL859	Platform - General cross-section	S 235	NC8	937,500	0,03	0,03	0,03
PL860	Platform - General cross-section	S 235	NC8	1249,990	0,04	0,04	0,04
C487	TOPUKLUK - C	S 235	NC5	1250,010	0,20	0,02	0,20
C488	TOPUKLUK - C	S 235	NC8	1250,010	0,06	0,01	0,06
C489	TOPUKLUK - C	S 235	NC8	1249,990	0,06	0,01	0,06
C490	TOPUKLUK - C	S 235	NC8	1250,010	0,06	0,01	0,06
C491	TOPUKLUK - C	S 235	NC8	1249,990	0,06	0,01	0,06
C492	TOPUKLUK - C	S 235	NC8	1250,010	0,06	0,01	0,06
C493	TOPUKLUK - C	S 235	NC8	1249,990	0,06	0,01	0,06
C494	TOPUKLUK - C	S 235	NC8	1250,010	0,06	0,01	0,06
C495	TOPUKLUK - C	S 235	NC8	1249,990	0,06	0,01	0,06
C496	TOPUKLUK - C	S 235	NC4	1249,990	0,20	0,02	0,20
CP332	DIYAGONAL - CHS	S 235	NC8	0,000	0,10	0,10	0,00
CP333	DIYAGONAL - CHS	S 235	NC8	0,000	0,12	0,12	0,00
CP334	DIYAGONAL - CHS	S 235	NC8	0,000	0,12	0,12	0,00
CP335	DIYAGONAL - CHS	S 235	NC8	0,000	0,12	0,12	0,00
CP336	DIYAGONAL - CHS	S 235	NC8	0,000	0,12	0,12	0,00
CP337	DIYAGONAL - CHS	S 235	NC8	0,000	0,10	0,10	0,00
B3030	DİKME - CFCHS48.3X3	S 235	NC8	2000,000	0,24	0,24	0,00
B3031	DIKME - CFCHS48.3X3	S 235	NC8	110,000	0,18	0,18	0,00
B3032	DİKME - CFCHS48.3X3	S 235	NC8	2000,000	0,30	0,30	0,00
B3033	DIKME - CFCHS48.3X3	S 235	NC8	110,000	0,26	0,26	0,00
B3034	DİKME - CFCHS48.3X3	S 235	NC8	2000,000	0,34	0,34	0,00
B3035	DİKME - CFCHS48.3X3	S 235	NC8	110,000	0,27	0,27	0,00
B3036	DİKME - CFCHS48.3X3	S 235	NC8	2000,000	0,33	0,33	0,00
B3037	DİKME - CFCHS48.3X3	S 235	NC8	110,000	0,28	0,28	0,00
B3038	DİKME - CFCHS48.3X3	S 235	NC8	2000,000	0,35	0,35	0,00
B3039	DIKME - CFCHS48.3X3	S 235	NC8	110,000	0,29	0,29	0,00
B3040	DİKME - CFCHS48.3X3	S 235	NC8	2000,000	0,35	0,35	0,00

Member	css	mat	Case	dx [mm]	un.check [-]	sec.check [-]	stab.check [-]
B3041	DİKME - CFCHS48.3X3	S 235	NC8	110,000	0,30	0,30	0,00
B3042	DİKME - CFCHS48.3X3	S 235	NC8	2000,000	0,35	0,35	0,00
B3043	DİKME - CFCHS48.3X3	S 235	NC8	110,000	0,29	0,29	0,00
B3044	DİKME - CFCHS48.3X3	S 235	NC8	2000,000	0,33	0,33	0,00
B3045	DİKME - CFCHS48.3X3	S 235	NC8	110,000	0,28	0,28	0,00
B3046	ALT_PROFIL - RHS	S 235	NC8	0,000	0,10	0,08	0,10
B3047	ALT_PROFIL - RHS	S 235	NC8	500,000	0,19	0,07	0,19
B3048	ALT_PROFIL - RHS	S 235	NC8	500,000	0,21	0,07	0,21
B3049	ALT_PROFIL - RHS	S 235	NC8	500,000	0,20	0,08	0,20
B3050	ALT_PROFIL - RHS	S 235	NC8	500,000	0,20	0,07	0,20
B3051	ALT_PROFIL - RHS	S 235	NC8	500,000	0,18	0,07	0,18
B3052	ALT_PROFIL - RHS	S 235	NC8	500,000	0,20	0,07	0,20
B3053	ALT_PROFIL - RHS	S 235	NC8	500,000	0,20	0,07	0,20
B3054	DİKME - CFCHS48.3X3	S 235	NC8	2000,000	0,34	0,34	0,00
B3055	DİKME - CFCHS48.3X3	S 235	NC8	110,000	0,27	0,27	0,00
B3056	ALT_PROFIL - RHS	S 235	NC8	500,000	0,21	0,07	0,21
B3057	DİKME - CFCHS48.3X3	S 235	NC8	2000,000	0,30	0,30	0,00
B3058	DİKME - CFCHS48.3X3	S 235	NC8	110,000	0,26	0,26	0,00
B3059	ALT_PROFIL - RHS	S 235	NC8	500,000	0,19	0,07	0,19
B3060	DİKME - CFCHS48.3X3	S 235	NC8	2000,000	0,24	0,24	0,00
B3061	DİKME - CFCHS48.3X3	S 235	NC8	110,000	0,18	0,18	0,00
B3062	ALT_PROFIL - RHS	S 235	NC8	500,000	0,10	0,03	0,10
B3063	ÜST_PROFIL - RHS	S 235	NC5	700,000	0,06	0,05	0,06
B3064	ÜST_PROFIL - RHS	S 235	NC8	700,000	0,09	0,08	0,09
B3065	ÜST_PROFIL - RHS	S 235	NC8	700,000	0,08	0,08	0,08
B3066	ÜST_PROFIL - RHS	S 235	NC8	700,000	0,09	0,08	0,09
B3067	ÜST_PROFIL - RHS	S 235	NC8	700,000	0,08	0,07	0,08
B3068	ÜST_PROFIL - RHS	S 235	NC8	700,000	0,10	0,09	0,10
B3069	ÜST_PROFIL - RHS	S 235	NC8	700,000	0,08	0,07	0,08
B3070	ÜST_PROFIL - RHS	S 235	NC8	700,000	0,09	0,08	0,09
B3071	ÜST_PROFIL - RHS	S 235	NC8	700,000	0,08	0,08	0,08
B3072	ÜST_PROFIL - RHS	S 235	NC8	700,000	0,09	0,08	0,09
B3073	ÜST_PROFIL - RHS	S 235	NC3	700,000	0,06	0,05	0,06
B3074	YATAY - CHS	S 235	NC8	1249,990	0,08	0,08	0,00
B3075	YATAY - CHS	S 235	NC8	1249,990	0,08	0,08	0,00
B3076	YATAY - CHS	S 235	NC8	1249,990	0,08	0,08	0,00
B3077	YATAY - CHS	S 235	NC8	1249,990	0,08	0,08	0,00
B3078	YATAY - CHS	S 235	NC8	1249,990	0,08	0,08	0,00
B3079	YATAY - CHS	S 235	NC8	1249,990	0,08	0,08	0,00
B3080	YATAY - CHS	S 235	NC8	1249,990	0,08	0,08	0,00
B3081	YATAY - CHS	S 235	NC8	1249,990	0,08	0,08	0,00
B3082	YATAY - CHS	S 235	NC8	1249,990	0,08	0,08	0,00
B3083	YATAY - CHS	S 235	NC8	1249,990	0,08	0,08	0,00
B3084	YATAY - CHS	S 235	NC8	1249,990	0,08	0,08	0,00
B3085	YATAY - CHS	S 235	NC8	1249,990	0,08	0,08	0,00
B3086	YATAY - CHS	S 235	NC8	1249,990	0,08	0,08	0,00
B3087	YATAY - CHS	S 235	NC8	1249,990	0,08	0,08	0,00
B3088	YATAY - CHS	S 235	NC8	1249,990	0,08	0,08	0,00
B3089	YATAY - CHS	S 235	NC8	1249,990	0,08	0,08	0,00
B3090	YATAY - CHS	S 235	NC8	1249,990	0,08	0,08	0,00
B3091	YATAY - CHS	S 235	NC8	1249,990	0,08	0,08	0,00
B3092	YATAY - CHS	S 235	NC8	1249,990	0,08	0,08	0,00
B3093	YATAY - CHS	S 235	NC8	1249,990	0,08	0,08	0,00
PL861	Platform - General cross-section	S 235	NC4	1250,010	0,02	0,02	0,02
PL862	Platform - General cross-section	S 235	NC8	1093,750	0,03	0,03	0,03
PL863	Platform - General cross-section	S 235	NC4	1249,990	0,02	0,02	0,02
PL864	Platform - General cross-section	S 235	NC8	2187,500	0,03	0,01	0,03
PL865	Platform - General cross-section	S 235	NC8	1249,990	0,02	0,02	0,02
PL866	Platform - General cross-section	S 235	NC8	2500,000	0,03	0,01	0,03
PL867	Platform - General cross-section	S 235	NC8	1250,010	0,02	0,02	0,02
PL868	Platform - General cross-section	S 235	NC8	2500,000	0,03	0,01	0,03
PL869	Platform - General cross-section	S 235	NC8	1250,010	0,02	0,02	0,02
PL870	Platform - General cross-section	S 235	NC8	2500,000	0,03	0,01	0,03
PL871	Platform - General cross-section	S 235	NC8	1249,990	0,02	0,02	0,02
PL872	Platform - General cross-section	S 235	NC8	1250,010	0,03	0,03	0,03
PL873	Platform - General cross-section	S 235	NC7	1250,010	0,02	0,02	0,02
PL874	Platform - General cross-section	S 235	NC8	1249,990	0,03	0,03	0,03
PL875	Platform - General cross-section	S 235	NC7	1249,990	0,02	0,02	0,02
PL876	Platform - General cross-section	S 235	NC8	1250,010	0,03	0,03	0,03
PL877	Platform - General cross-section	S 235	NC4	1250,010	0,02	0,02	0,02
PL878	Platform - General cross-section	S 235	NC8	1249,990	0,03	0,03	0,03
PL879	Platform - General cross-section	S 235	NC2	1249,990	0,02	0,02	0,02
PL880	Platform - General cross-section	S 235	NC8	1406,250	0,03	0,03	0,03
C497	TOPUKLUK - C	S 235	NC8	1250,010	0,25	0,02	0,25
C498	TOPUKLUK - C	S 235	NC8	1249,990	0,07	0,01	0,07
C499	TOPUKLUK - C	S 235	NC8	1249,990	0,06	0,01	0,06

Member	css	mat	Case	dx [mm]	un.check [-]	sec.check [-]	stab.check [-]
C500	TOPUKLUK - C	S 235	NC8	1249,990	0,06	0,01	0,06
C501	TOPUKLUK - C	S 235	NC8	1249,990	0,12	0,01	0,12
C502	TOPUKLUK - C	S 235	NC8	1250,010	0,12	0,01	0,12
C503	TOPUKLUK - C	S 235	NC8	1250,010	0,06	0,01	0,06
C504	TOPUKLUK - C	S 235	NC8	1250,010	0,06	0,01	0,06
C505	TOPUKLUK - C	S 235	NC8	1250,010	0,07	0,01	0,07
C506	TOPUKLUK - C	S 235	NC8	1249,990	0,25	0,02	0,25
CP338	DIYAGONAL - CHS	S 235	NC8	2957,431	0,08	0,08	0,00
CP339	DIYAGONAL - CHS	S 235	NC8	2957,431	0,08	0,08	0,00
CP340	DIYAGONAL - CHS	S 235	NC8	2957,431	0,09	0,09	0,00
CP341	DIYAGONAL - CHS	S 235	NC8	2957,431	0,09	0,09	0,00
CP342	DIYAGONAL - CHS	S 235	NC8	2957,431	0,08	0,08	0,00
CP343	DIYAGONAL - CHS	S 235	NC8	2957,431	0,08	0,08	0,00
B3094	DİKME - CFCHS48.3X3	S 235	NC8	110,000	0,28	0,28	0,00
B3095	DİKME - CFCHS48.3X3	S 235	NC8	2000,000	0,24	0,24	0,00
B3096	DİKME - CFCHS48.3X3	S 235	NC8	110,000	0,37	0,37	0,00
B3097	DİKME - CFCHS48.3X3	S 235	NC8	0,000	0,31	0,31	0,00
B3098	DİKME - CFCHS48.3X3	S 235	NC8	110,000	0,35	0,35	0,00
B3099	DİKME - CFCHS48.3X3	S 235	NC8	0,000	0,33	0,33	0,00
B3100	DİKME - CFCHS48.3X3	S 235	NC8	110,000	0,37	0,37	0,00
B3101	DIKME - CFCHS48.3X3	S 235	NC8	0,000	0,34	0,34	0,00
B3102	DİKME - CFCHS48.3X3	S 235	NC8	110,000	0,38	0,38	0,00
B3103	DIKME - CFCHS48.3X3	S 235	NC8	0,000	0,34	0,34	0,00
B3104	DİKME - CFCHS48.3X3	S 235	NC8	110,000	0,44	0,44	0,00
B3105	DİKME - CFCHS48.3X3	S 235	NC8	0,000	0,35	0,35	0,00
B3106	DİKME - CFCHS48.3X3	S 235	NC8	110,000	0,38	0,38	0,00
B3107	DİKME - CFCHS48.3X3	S 235	NC8	0,000	0,34	0,34	0,00
B3108	DİKME - CFCHS48.3X3	S 235	NC8	110,000	0,37	0,37	0,00
B3109	DİKME - CFCHS48.3X3	S 235	NC8	0,000	0,34	0,34	0,00
B3110	ALT_PROFIL - RHS	S 235	NC8	200,000	0,17	0,08	0,17
B3111	ALT_PROFIL - RHS	S 235	NC8	200,000	0,18	0,11	0,18
B3112	ALT_PROFIL - RHS	S 235	NC8	200,000	0,18	0,12	0,18
B3113	ALT_PROFIL - RHS	S 235	NC8	200,000	0,18	0,13	0,18
B3114	ALT_PROFIL - RHS	S 235	NC8	700,000	0,19	0,18	0,19
B3115	ALT_PROFIL - RHS	S 235	NC8	200,000	0,17	0,12	0,17
B3116	ALT_PROFIL - RHS	S 235	NC8	700,000	0,19	0,18	0,19
B3117	ALT_PROFIL - RHS	S 235	NC8	200,000	0,18	0,13	0,18
B3118	DIKME - CFCHS48.3X3	S 235	NC8	110,000	0,35	0,35	0,00
B3119	DİKME - CFCHS48.3X3	S 235	NC8	0,000	0,33	0,33	0,00
B3120	ALT_PROFIL - RHS	S 235	NC8	200,000	0,18	0,12	0,18
B3121	DİKME - CFCHS48.3X3	S 235	NC8	110,000	0,37	0,37	0,00
B3122	DİKME - CFCHS48.3X3	S 235	NC8	0,000	0,31	0,31	0,00
B3123	ALT_PROFIL - RHS	S 235	NC8	200,000	0,18	0,11	0,18
B3124	DİKME - CFCHS48.3X3	S 235	NC8	110,000	0,28	0,28	0,00
B3125	DİKME - CFCHS48.3X3	S 235	NC8	2000,000	0,24	0,24	0,00
B3126	ALT_PROFIL - RHS	S 235	NC8	200,000	0,17	0,08	0,17
B3127	ÜST_PROFIL - RHS	S 235	NC8	700,000	0,13	0,10	0,13
B3128	ÜST_PROFIL - RHS	S 235	NC8	0,000	0,12	0,10	0,12
B3129	ÜST_PROFIL - RHS	S 235	NC8	700,000	0,11	0,09	0,11
B3130	ÜST_PROFIL - RHS	S 235	NC8	700,000	0,11	0,10	0,11
B3131	ÜST_PROFIL - RHS	S 235	NC8	700,000	0,13	0,11	0,13
B3132	ÜST_PROFIL - RHS	S 235	NC8	0,000	0,15	0,13	0,15
B3133	ÜST_PROFIL - RHS	S 235	NC8	700,000	0,13	0,11	0,13
B3134	ÜST_PROFIL - RHS	S 235	NC8	700,000	0,11	0,10	0,11
B3135	ÜST_PROFIL - RHS	S 235	NC8	700,000	0,11	0,09	0,11
B3136	ÜST_PROFIL - RHS	S 235	NC8	0,000	0,12	0,10	0,12
B3137	ÜST_PROFIL - RHS	S 235	NC8	700,000	0,13	0,10	0,13
B3138	YATAY - CHS	S 235	NC8	1249,990	0,08	0,08	0,00
B3139	YATAY - CHS	S 235	NC8	1249,990	0,08	0,08	0,00
B3140	YATAY - CHS	S 235	NC8	1249,990	0,08	0,08	0,00
B3141	YATAY - CHS	S 235	NC8	1249,990	0,08	0,08	0,00
B3142	YATAY - CHS	S 235	NC8	1249,990	0,08	0,08	0,00
B3143	YATAY - CHS	S 235	NC8	1249,990	0,08	0,08	0,00
B3144	YATAY - CHS	S 235	NC8	1249,990	0,08	0,08	0,00
B3145	YATAY - CHS	S 235	NC8	1249,990	0,08	0,08	0,00
B3146	YATAY - CHS	S 235	NC8	1249,990	0,08	0,08	0,00
B3147	YATAY - CHS	S 235	NC8	1249,990	0,08	0,08	0,00
B3148	YATAY - CHS	S 235	NC8	1249,990	0,08	0,08	0,00
B3149	YATAY - CHS	S 235	NC8	1249,990	0,08	0,08	0,00
B3150	YATAY - CHS	S 235	NC8	1249,990	0,08	0,08	0,00
B3151	YATAY - CHS	S 235	NC8	1249,990	0,08	0,08	0,00
B3152	YATAY - CHS	S 235	NC8	1249,990	0,08	0,08	0,00
B3153	YATAY - CHS	S 235	NC8	1249,990	0,08	0,08	0,00
B3154	YATAY - CHS	S 235	NC8	1249,990	0,08	0,08	0,00
B3155	YATAY - CHS	S 235	NC8	1249,990	0,08	0,08	0,00
B3156	YATAY - CHS	S 235	NC8	1249,990	0,08	0,08	0,00

Member	css	mat	Case	dx [mm]	un.check [-]	sec.check [-]	stab.check [-]
B3157	YATAY - CHS	S 235	NC8	1249,990	0,08	0,08	0,00
PL881	Platform - General cross-section	S 235	NC8	1562,500	0,03	0,03	0,03
PL882	Platform - General cross-section	S 235	NC8	2500,000	0,04	0,01	0,04
PL883	Platform - General cross-section	S 235	NC8	1249,990	0,04	0,04	0,04
PL884	Platform - General cross-section	S 235	NC8	2500,000	0,04	0,01	0,04
PL885	Platform - General cross-section	S 235	NC8	1093,750	0,03	0,03	0,03
PL886	Platform - General cross-section	S 235	NC8	2500,000	0,04	0,01	0,04
PL887	Platform - General cross-section	S 235	NC8	1249,990	0,03	0,03	0,03
PL888	Platform - General cross-section	S 235	NC8	2500,000	0,03	0,01	0,03
PL889	Platform - General cross-section	S 235	NC8	1250,010	0,02	0,02	0,02
PL890	Platform - General cross-section	S 235	NC8	1406,250	0,03	0,03	0,03
PL891	Platform - General cross-section	S 235	NC8	1249,990	0,02	0,02	0,02
PL892	Platform - General cross-section	S 235	NC8	1249,990	0,03	0,03	0,03
PL893	Platform - General cross-section	S 235	NC8	1250,010	0,03	0,03	0,03
PL894	Platform - General cross-section	S 235	NC8	1250,010	0,03	0,03	0,03
PL895	Platform - General cross-section	S 235	NC8	1406,250	0,03	0,03	0,03
PL896	Platform - General cross-section	S 235	NC8	1250,010	0,04	0,04	0,04
PL897	Platform - General cross-section	S 235	NC8	1250,010	0,04	0,04	0,04
PL898	Platform - General cross-section	S 235	NC8	1250,010	0,04	0,04	0,04
PL899	Platform - General cross-section	S 235	NC8	937,500	0,03	0,03	0,03
PL900	Platform - General cross-section	S 235	NC8	1249,990	0,04	0,04	0,04
C507	TOPUKLUK - C	S 235	NC5	1250,010	0,21	0,02	0,21
C508	TOPUKLUK - C	S 235	NC8	1250,010	0,06	0,01	0,06
C509	TOPUKLUK - C	S 235	NC8	1249,990	0,06	0,01	0,06
C510	TOPUKLUK - C	S 235	NC8	1250,010	0,06	0,01	0,06
C511	TOPUKLUK - C	S 235	NC8	1249,990	0,06	0,01	0,06
C512	TOPUKLUK - C	S 235	NC8	1250,010	0,06	0,01	0,06
C513	TOPUKLUK - C	S 235	NC8	1249,990	0,06	0,01	0,06
C514	TOPUKLUK - C	S 235	NC8	1250,010	0,06	0,01	0,06
C515	TOPUKLUK - C	S 235	NC8	1249,990	0,06	0,01	0,06
C516	TOPUKLUK - C	S 235	NC4	1249,990	0,21	0,02	0,21
CP344	DIYAGONAL - CHS	S 235	NC8	0,000	0,10	0,10	0,00
CP345	DIYAGONAL - CHS	S 235	NC8	0,000	0,12	0,12	0,00
CP346	DIYAGONAL - CHS	S 235	NC8	0,000	0,12	0,12	0,00
CP347	DIYAGONAL - CHS	S 235	NC8	0,000	0,12	0,12	0,00
CP348	DIYAGONAL - CHS	S 235	NC8	0,000	0,12	0,12	0,00
CP349	DIYAGONAL - CHS	S 235	NC8	0,000	0,10	0,10	0,00
B3158	DIKME - CFCHS48.3X3	S 235	NC8	2000,000	0,24	0,24	0,00
B3159	DİKME - CFCHS48.3X3	S 235	NC8	110,000	0,18	0,18	0,00
B3160	DİKME - CFCHS48.3X3	S 235	NC8	2000,000	0,30	0,30	0,00
B3161	DİKME - CFCHS48.3X3	S 235	NC8	110,000	0,25	0,25	0,00
B3162	DİKME - CFCHS48.3X3	S 235	NC8	2000,000	0,33	0,33	0,00
B3163	DİKME - CFCHS48.3X3	S 235	NC8	110,000	0,27	0,27	0,00
B3164	DİKME - CFCHS48.3X3	S 235	NC8	2000,000	0,33	0,33	0,00
B3165	DİKME - CFCHS48.3X3	S 235	NC8	110,000	0,28	0,28	0,00
B3166	DIKME - CFCHS48.3X3	S 235	NC8	2000,000	0,35	0,35	0,00
B3167	DİKME - CFCHS48.3X3	S 235	NC8	110,000	0,28	0,28	0,00
B3168	DIKME - CFCHS48.3X3	S 235	NC8	2000,000	0,34	0,34	0,00
B3169	DİKME - CFCHS48.3X3	S 235	NC8	110,000	0,29	0,29	0,00
B3170	DİKME - CFCHS48.3X3	S 235	NC8	2000,000	0,35	0,35	0,00
B3171	DİKME - CFCHS48.3X3	S 235	NC8	110,000	0,28	0,28	0,00
B3172	DIKME - CFCHS48.3X3	S 235	NC8	2000,000	0,33	0,33	0,00
B3173	DİKME - CFCHS48.3X3	S 235	NC8	110,000	0,28	0,28	0,00
B3174	ALT_PROFIL - RHS	S 235	NC5	700,000	0,10	0,08	0,10
B3175	ALT_PROFIL - RHS	S 235	NC8	500,000	0,18	0,07	0,18
B3176	ALT_PROFIL - RHS	S 235	NC8	500,000	0,21	0,07	0,21
B3177	ALT_PROFIL - RHS	S 235	NC8	500,000	0,19	0,08	0,19
B3178	ALT_PROFIL - RHS	S 235	NC8	500,000	0,20	0,07	0,20
B3179	ALT_PROFIL - RHS	S 235	NC8	500,000	0,18	0,07	0,18
B3180	ALT_PROFIL - RHS	S 235	NC8	500,000	0,20	0,07	0,20
B3181	ALT_PROFIL - RHS	S 235	NC8	500,000	0,19	0,07	0,19
B3182	DİKME - CFCHS48.3X3	S 235	NC8	2000,000	0,33	0,33	0,00
B3183	DİKME - CFCHS48.3X3	S 235	NC8	110,000	0,27	0,27	0,00
B3184	ALT_PROFIL - RHS	S 235	NC8	500,000	0,21	0,07	0,21
B3185	DİKME - CFCHS48.3X3	S 235	NC8	2000,000	0,30	0,30	0,00
B3186	DİKME - CFCHS48.3X3	S 235	NC8	110,000	0,25	0,25	0,00
B3187	ALT_PROFIL - RHS	S 235	NC8	500,000	0,18	0,07	0,18
B3188	DİKME - CFCHS48.3X3	S 235	NC8	2000,000	0,23	0,23	0,00
B3189	DIKME - CFCHS48.3X3	S 235	NC8	110,000	0,18	0,18	0,00
B3190	ALT_PROFIL - RHS	S 235	NC8	500,000	0,10	0,03	0,10
B3191	ÜST_PROFIL - RHS	S 235	NC5	700,000	0,07	0,05	0,07
B3192	ÜST_PROFIL - RHS	S 235	NC8	700,000	0,09	0,08	0,09
B3193	ÜST_PROFIL - RHS	S 235	NC8	700,000	0,08	0,08	0,08
B3194	ÜST_PROFIL - RHS	S 235	NC8	700,000	0,08	0,08	0,08
B3195	ÜST_PROFIL - RHS	S 235	NC8	700,000	0,08	0,07	0,08
B3196	ÜST_PROFIL - RHS	S 235	NC8	700,000	0,09	0,09	0,09

Member	css	mat	Case	dx [mm]	un.check [-]	sec.check [-]	stab.check [-]
B3197	ÜST_PROFIL - RHS	S 235	NC8	700,000	0,08	0,07	0,08
B3198	ÜST_PROFIL - RHS	S 235	NC8	700,000	0,08	0,08	0,08
B3199	ÜST_PROFIL - RHS	S 235	NC8	700,000	0,08	0,08	0,08
B3200	ÜST_PROFIL - RHS	S 235	NC8	700,000	0,09	0,08	0,09
B3201	ÜST_PROFIL - RHS	S 235	NC3	700,000	0,07	0,05	0,07
B3202	YATAY - CHS	S 235	NC8	1249,990	0,08	0,08	0,00
B3203	YATAY - CHS	S 235	NC8	1249,990	0,08	0,08	0,00
B3204	YATAY - CHS	S 235	NC8	1249,990	0,08	0,08	0,00
B3205	YATAY - CHS	S 235	NC8	1249,990	0,08	0,08	0,00
B3206	YATAY - CHS	S 235	NC8	1249,990	0,08	0,08	0,00
B3207	YATAY - CHS	S 235	NC8	1249,990	0,08	0,08	0,00
B3208	YATAY - CHS	S 235	NC8	1249,990	0,08	0,08	0,00
B3209	YATAY - CHS	S 235	NC8	1249,990	0,08	0,08	0,00
B3210	YATAY - CHS	S 235	NC8	1249,990	0,08	0,08	0,00
B3211	YATAY - CHS	S 235	NC8	1249,990	0,08	0,08	0,00
B3212	YATAY - CHS	S 235	NC8	1249,990	0,08	0,08	0,00
B3213	YATAY - CHS	S 235	NC8	1249,990	0,08	0,08	0,00
B3214	YATAY - CHS	S 235	NC8	1249,990	0,08	0,08	0,00
B3215	YATAY - CHS	S 235	NC8	1249,990	0,08	0,08	0,00
B3216	YATAY - CHS	S 235	NC8	1249,990	0,08	0,08	0,00
B3217	YATAY - CHS	S 235	NC8	1249,990	0,08	0,08	0,00
B3218	YATAY - CHS	S 235	NC8	1249,990	0,08	0,08	0,00
B3219	YATAY - CHS	S 235	NC8	1249,990	0,08	0,08	0,00
B3220	YATAY - CHS	S 235	NC8	1249,990	0,08	0,08	0,00
B3221	YATAY - CHS	S 235	NC8	1249,990	0,08	0,08	0,00
PL901	Platform - General cross-section	S 235	NC4	1250,010	0,02	0,02	0,02
PL902	Platform - General cross-section	S 235	NC8	1093,750	0,03	0,03	0,03
PL903	Platform - General cross-section	S 235	NC4	1249,990	0,02	0,02	0,02
PL904	Platform - General cross-section	S 235	NC8	2343,750	0,03	0,01	0,03
PL905	Platform - General cross-section	S 235	NC8	1249,990	0,02	0,02	0,02
PL906	Platform - General cross-section	S 235	NC8	2500,000	0,03	0,01	0,03
PL907	Platform - General cross-section	S 235	NC4	1250,010	0,02	0,02	0,02
PL908	Platform - General cross-section	S 235	NC8	2500,000	0,03	0,01	0,03
PL909	Platform - General cross-section	S 235	NC8	1250,010	0,02	0,02	0,02
PL910	Platform - General cross-section	S 235	NC8	2500,000	0,03	0,01	0,03
PL911	Platform - General cross-section	S 235	NC8	1249,990	0,02	0,02	0,02
PL912	Platform - General cross-section	S 235	NC8	1250,010	0,03	0,03	0,03
PL913	Platform - General cross-section	S 235	NC7	1250,010	0,02	0,02	0,02
PL914	Platform - General cross-section	S 235	NC8	1249,990	0,03	0,03	0,03
PL915	Platform - General cross-section	S 235	NC7	1249,990	0,02	0,02	0,02
PL916	Platform - General cross-section	S 235	NC8	1250,010	0,03	0,03	0,03
PL917	Platform - General cross-section	S 235	NC4	1250,010	0,02	0,02	0,02
PL918	Platform - General cross-section	S 235	NC8	1249,990	0,03	0,03	0,03
PL919	Platform - General cross-section	S 235	NC4	1249,990	0,02	0,02	0,02
PL920	Platform - General cross-section	S 235	NC8	1406,250	0,03	0,03	0,03
C517	TOPUKLUK - C	S 235	NC8	1250,010	0,25	0,02	0,25
C518	TOPUKLUK - C	S 235	NC8	1249,990	0,07	0,01	0,07
C519	TOPUKLUK - C	S 235	NC8	1249,990	0,06	0,01	0,06
C520	TOPUKLUK - C	S 235	NC8	1250,010	0,06	0,01	0,06
C521	TOPUKLUK - C	S 235	NC8	1249,990	0,12	0,01	0,12
C522	TOPUKLUK - C	S 235	NC8	1250,010	0,12	0,01	0,12
C523	TOPUKLUK - C	S 235	NC8	1250,010	0,06	0,01	0,06
C524	TOPUKLUK - C	S 235	NC8	1250,010	0,06	0,01	0,06
C525	TOPUKLUK - C	S 235	NC8	1250,010	0,07	0,01	0,07
C526	TOPUKLUK - C	S 235	NC8	1249,990	0,25	0,02	0,25
CP350	DIYAGONAL - CHS	S 235	NC8	2957,431	0,08	0,08	0,00
CP351	DIYAGONAL - CHS	S 235	NC8	2957,431	0,08	0,08	0,00
CP352	DIYAGONAL - CHS	S 235	NC8	2957,431	0,09	0,09	0,00
CP353	DIYAGONAL - CHS	S 235	NC8	2957,431	0,09	0,09	0,00
CP354	DIYAGONAL - CHS	S 235	NC8	2957,431	0,08	0,08	0,00
CP355	DIYAGONAL - CHS	S 235	NC8	2957,431	0,08	0,08	0,00
B3222	DİKME - CFCHS48.3X3	S 235	NC8	110,000	0,28	0,28	0,00
B3223	DİKME - CFCHS48.3X3	S 235	NC8	2000,000	0,24	0,24	0,00
B3224	DİKME - CFCHS48.3X3	S 235	NC8	110,000	0,37	0,37	0,00
B3225	DİKME - CFCHS48.3X3	S 235	NC8	0,000	0,31	0,31	0,00
B3226	DİKME - CFCHS48.3X3	S 235	NC8	110,000	0,35	0,35	0,00
B3227	DIKME - CFCHS48.3X3	S 235	NC8	0,000	0,32	0,32	0,00
B3228	DİKME - CFCHS48.3X3	S 235	NC8	110,000	0,36	0,36	0,00
B3229	DIKME - CFCHS48.3X3	S 235	NC8	0,000	0,34	0,34	0,00
B3230	DİKME - CFCHS48.3X3	S 235	NC8	110,000	0,38	0,38	0,00
B3231	DİKME - CFCHS48.3X3	S 235	NC8	0,000	0,34	0,34	0,00
B3232	DİKME - CFCHS48.3X3	S 235	NC8	110,000	0,43	0,43	0,00
B3233	DİKME - CFCHS48.3X3	S 235	NC8	0,000	0,35	0,35	0,00
B3234	DİKME - CFCHS48.3X3	S 235	NC8	110,000	0,38	0,38	0,00
B3235	DIKME - CFCHS48.3X3	S 235	NC8	0,000	0,34	0,34	0,00
B3236	DİKME - CFCHS48.3X3	S 235	NC8	110,000	0,36	0,36	0,00

Member	css	mat	Case	dx [mm]	un.check [-]	sec.check [-]	stab.check [-]
B3237	DİKME - CFCHS48.3X3	S 235	NC8	0,000	0,34	0,34	0,00
B3238	ALT_PROFIL - RHS	S 235	NC8	200,000	0,17	0,09	0,17
B3239	ALT_PROFIL - RHS	S 235	NC8	200,000	0,18	0,11	0,18
B3240	ALT_PROFIL - RHS	S 235	NC8	200,000	0,18	0,12	0,18
B3241	ALT_PROFIL - RHS	S 235	NC8	200,000	0,18	0,13	0,18
B3242	ALT_PROFIL - RHS	S 235	NC8	700,000	0,19	0,18	0,19
B3243	ALT_PROFIL - RHS	S 235	NC8	200,000	0,17	0,12	0,17
B3244	ALT_PROFIL - RHS	S 235	NC8	700,000	0,19	0,18	0,19
B3245	ALT_PROFIL - RHS	S 235	NC8	200,000	0,18	0,13	0,18
B3246	DİKME - CFCHS48.3X3	S 235	NC8	110,000	0,35	0,35	0,00
B3247	DIKME - CFCHS48.3X3	S 235	NC8	0,000	0,32	0,32	0,00
B3248	ALT_PROFIL - RHS	S 235	NC8	200,000	0,18	0,12	0,18
B3249	DİKME - CFCHS48.3X3	S 235	NC8	110,000	0,37	0,37	0,00
B3250	DİKME - CFCHS48.3X3	S 235	NC8	0,000	0,31	0,31	0,00
B3251	ALT_PROFIL - RHS	S 235	NC8	200,000	0,18	0,11	0,18
B3252	DİKME - CFCHS48.3X3	S 235	NC8	110,000	0,28	0,28	0,00
B3253	DİKME - CFCHS48.3X3	S 235	NC8	2000,000	0,24	0,24	0,00
B3254	ALT_PROFIL - RHS	S 235	NC8	200,000	0,17	0,08	0,17
B3255	ÜST_PROFIL - RHS	S 235	NC8	700,000	0,13	0,10	0,13
B3256	ÜST_PROFIL - RHS	S 235	NC8	0,000	0,12	0,10	0,12
B3257	ÜST_PROFIL - RHS	S 235	NC8	700,000	0,11	0,09	0,11
B3258	ÜST_PROFIL - RHS	S 235	NC8	700,000	0,11	0,10	0,11
B3259	ÜST_PROFIL - RHS	S 235	NC8	700,000	0,13	0,11	0,13
B3260	ÜST_PROFIL - RHS	S 235	NC8	0,000	0,15	0,13	0,15
B3261	ÜST_PROFIL - RHS	S 235	NC8	700,000	0,13	0,11	0,13
B3262	ÜST_PROFIL - RHS	S 235	NC8	700,000	0,11	0,10	0,11
B3263	ÜST_PROFIL - RHS	S 235	NC8	700,000	0,11	0,09	0,11
B3264	ÜST_PROFIL - RHS	S 235	NC8	0,000	0,12	0,10	0,12
B3265	ÜST_PROFIL - RHS	S 235	NC8	700,000	0,13	0,10	0,13
B3266	YATAY - CHS	S 235	NC8	1249,990	0,08	0,08	0,00
B3267	YATAY - CHS	S 235	NC8	1249,990	0,08	0,08	0,00
B3268	YATAY - CHS	S 235	NC8	1249,990	0,08	0,08	0,00
B3269	YATAY - CHS	S 235	NC8	1249,990	0,08	0,08	0,00
B3270	YATAY - CHS	S 235	NC8	1249,990	0,08	0,08	0,00
B3271	YATAY - CHS	S 235	NC8	1249,990	0,08	0,08	0,00
B3272	YATAY - CHS	S 235	NC8	1250,010	0,08	0,08	0,00
B3273	YATAY - CHS	S 235	NC8	1249,990	0,08	0,08	0,00
B3274	YATAY - CHS	S 235	NC8	1249,990	0,08	0,08	0,00
B3275	YATAY - CHS	S 235	NC8	1249,990	0,08	0,08	0,00
B3276	YATAY - CHS	S 235	NC8	1249,990	0,08	0,08	0,00
B3277	YATAY - CHS	S 235	NC8	1249,990	0,08	0,08	0,00
B3278	YATAY - CHS	S 235	NC8	1249,990	0,08	0,08	0,00
B3279	YATAY - CHS	S 235	NC8	1249,990	0,08	0,08	0,00
B3280	YATAY - CHS	S 235	NC8	1249,990	0,08	0,08	0,00
B3281	YATAY - CHS	S 235	NC8	1249,990	0,08	0,08	0,00
B3282	YATAY - CHS	S 235	NC8	1249,990	0,08	0,08	0,00
B3283	YATAY - CHS	S 235	NC8	1249,990	0,08	0,08	0,00
B3284	YATAY - CHS	S 235	NC8	1249,990	0,08	0,08	0,00
B3285	YATAY - CHS	S 235	NC8	1249,990	0,08	0,08	0,00
PL921	Platform - General cross-section	S 235	NC8	1562,500	0,03	0,03	0,03
PL922	Platform - General cross-section	S 235	NC8	2500,000	0,04	0,01	0,04
PL923	Platform - General cross-section	S 235	NC8	1249,990	0,04	0,04	0,04
PL924	Platform - General cross-section	S 235	NC8	2500,000	0,04	0,01	0,04
PL925	Platform - General cross-section	S 235	NC8	1093,750	0,03	0,03	0,03
PL926	Platform - General cross-section	S 235	NC8	2500,000	0,04	0,01	0,04
PL927	Platform - General cross-section	S 235	NC8	1249,990	0,03	0,02	0,03
PL928	Platform - General cross-section	S 235	NC8	2500,000	0,03	0,01	0,03
PL929	Platform - General cross-section	S 235	NC8	1250,010	0,02	0,02	0,02
PL930	Platform - General cross-section	S 235	NC8	1406,250	0,03	0,03	0,03
PL931	Platform - General cross-section	S 235	NC8	1249,990	0,02	0,02	0,02
PL932	Platform - General cross-section	S 235	NC8	1249,990	0,03	0,03	0,03
PL933	Platform - General cross-section	S 235	NC8	1250,010	0,03	0,02	0,03
PL934	Platform - General cross-section	S 235	NC8	1250,010	0,03	0,03	0,03
PL935	Platform - General cross-section	S 235	NC8	1406,250	0,03	0,03	0,03
PL936	Platform - General cross-section	S 235	NC8	1250,010	0,04	0,04	0,04
PL937	Platform - General cross-section	S 235	NC8	1250,010	0,04	0,04	0,04
PL938	Platform - General cross-section	S 235	NC8	1250,010	0,04	0,04	0,04
PL939	Platform - General cross-section	S 235	NC8	937,500	0,03	0,03	0,03
PL940	Platform - General cross-section	S 235	NC8	1249,990	0,04	0,04	0,04
C527	TOPUKLUK - C	S 235	NC5	1250,010	0,22	0,02	0,22
C528	TOPUKLUK - C	S 235	NC8	1250,010	0,06	0,01	0,06
C529	TOPUKLUK - C	S 235	NC8	1249,990	0,06	0,01	0,06
C530	TOPUKLUK - C	S 235	NC8	1250,010	0,06	0,01	0,06
C531	TOPUKLUK - C	S 235	NC8	1249,990	0,06	0,01	0,06
C532	TOPUKLUK - C	S 235	NC8	1250,010	0,06	0,01	0,06
C533	TOPUKLUK - C	S 235	NC8	1249,990	0,06	0,01	0,06

Member	css	mat	Case	dx [mm]	un.check [-]	sec.check [-]	stab.check [-]
C534	TOPUKLUK - C	S 235	NC8	1250,010	0,06	0,01	0,06
C535	TOPUKLUK - C	S 235	NC8	1249,990	0,06	0,01	0,06
C536	TOPUKLUK - C	S 235	NC4	1249,990	0,22	0,02	0,22
CP356	DIYAGONAL - CHS	S 235	NC8	0,000	0,10	0,10	0,00
CP357	DIYAGONAL - CHS	S 235	NC8	0,000	0,12	0,12	0,00
CP358	DIYAGONAL - CHS	S 235	NC8	0,000	0,12	0,12	0,00
CP359	DIYAGONAL - CHS	S 235	NC8	0,000	0,12	0,12	0,00
CP360	DIYAGONAL - CHS	S 235	NC8	0,000	0,12	0,12	0,00
CP361	DIYAGONAL - CHS	S 235	NC8	0,000	0,10	0,10	0,00
B3286	DİKME - CFCHS48.3X3	S 235	NC8	2000,000	0,23	0,23	0,00
B3287	DIKME - CFCHS48.3X3	S 235	NC8	110,000	0,17	0,17	0,00
B3288	DİKME - CFCHS48.3X3	S 235	NC8	2000,000	0,30	0,30	0,00
B3289	DİKME - CFCHS48.3X3	S 235	NC8	110,000	0,25	0,25	0,00
B3290	DİKME - CFCHS48.3X3	S 235	NC8	2000,000	0,33	0,33	0,00
B3291	DİKME - CFCHS48.3X3	S 235	NC8	110,000	0,26	0,26	0,00
B3292	DİKME - CFCHS48.3X3	S 235	NC8	2000,000	0,32	0,32	0,00
B3293	DİKME - CFCHS48.3X3	S 235	NC8	110,000	0,27	0,27	0,00
B3294	DİKME - CFCHS48.3X3	S 235	NC8	2000,000	0,34	0,34	0,00
B3295	DİKME - CFCHS48.3X3	S 235	NC8	110,000	0,27	0,27	0,00
B3296	DİKME - CFCHS48.3X3	S 235	NC8	2000,000	0,34	0,34	0,00
B3297	DIKME - CFCHS48.3X3	S 235	NC8	110,000	0,29	0,29	0,00
B3298	DİKME - CFCHS48.3X3	S 235	NC8	2000,000	0,34	0,34	0,00
B3299	DIKME - CFCHS48.3X3	S 235	NC8	110,000	0,27	0,27	0,00
B3300	DİKME - CFCHS48.3X3	S 235	NC8	2000,000	0,32	0,32	0,00
B3301	DİKME - CFCHS48.3X3	S 235	NC8	110,000	0,27	0,27	0,00
B3302	ALT_PROFIL - RHS	S 235	NC5	700,000	0,10	0,08	0,10
B3303	ALT_PROFIL - RHS	S 235	NC8	500,000	0,18	0,07	0,18
B3304	ALT_PROFIL - RHS	S 235	NC8	500,000	0,20	0,07	0,20
B3305	ALT_PROFIL - RHS	S 235	NC8	500,000	0,19	0,07	0,19
B3306	ALT_PROFIL - RHS	S 235	NC8	500,000	0,19	0,07	0,19
B3307	ALT_PROFIL - RHS	S 235	NC8	500,000	0,18	0,07	0,18
B3308	ALT_PROFIL - RHS	S 235	NC8	500,000	0,19	0,07	0,19
B3309	ALT_PROFIL - RHS	S 235	NC8	500,000	0,19	0,07	0,19
B3310	DİKME - CFCHS48.3X3	S 235	NC8	2000,000	0,33	0,33	0,00
B3311	DİKME - CFCHS48.3X3	S 235	NC8	110,000	0,26	0,26	0,00
B3312	ALT_PROFIL - RHS	S 235	NC8	500,000	0,20	0,07	0,20
B3313	DİKME - CFCHS48.3X3	S 235	NC8	2000,000	0,30	0,30	0,00
B3314	DIKME - CFCHS48.3X3	S 235	NC8	110,000	0,25	0,25	0,00
B3315	ALT_PROFIL - RHS	S 235	NC8	500,000	0,18	0,07	0,18
B3316	DİKME - CFCHS48.3X3	S 235	NC8	2000,000	0,23	0,23	0,00
B3317	DİKME - CFCHS48.3X3	S 235	NC8	110,000	0,17	0,17	0,00
B3318	ALT_PROFIL - RHS	S 235	NC4	700,000	0,10	0,09	0,10
B3319	ÜST_PROFIL - RHS	S 235	NC5	700,000	0,07	0,06	0,07
B3320	ÜST_PROFIL - RHS	S 235	NC8	700,000	0,09	0,08	0,09
B3321	ÜST_PROFIL - RHS	S 235	NC8	700,000	0,08	0,07	0,08
B3322	ÜST_PROFIL - RHS	S 235	NC8	700,000	0,08	0,07	0,08
B3323	ÜST_PROFIL - RHS	S 235	NC8	700,000	0,08	0,07	0,08
B3324	ÜST_PROFIL - RHS	S 235	NC8	700,000	0,09	0,08	0,09
B3325	ÜST_PROFIL - RHS	S 235	NC8	700,000	0,08	0,07	0,08
B3326	ÜST_PROFIL - RHS	S 235	NC8	700,000	0,08	0,07	0,08
B3327	ÜST_PROFIL - RHS	S 235	NC8	700,000	0,08	0,07	0,08
B3328	ÜST_PROFIL - RHS	S 235	NC8	700,000	0,09	0,08	0,09
B3329	ÜST_PROFIL - RHS	S 235	NC3	700,000	0,07	0,06	0,07
B3330	YATAY - CHS	S 235	NC8	1249,990	0,08	0,08	0,00
B3331	YATAY - CHS	S 235	NC8	1249,990	0,08	0,08	0,00
B3332	YATAY - CHS	S 235	NC8	1249,990	0,08	0,08	0,00
B3333	YATAY - CHS	S 235	NC8	1249,990	0,08	0,08	0,00
B3334	YATAY - CHS	S 235	NC8	1249,990	0,08	0,08	0,00
B3335	YATAY - CHS	S 235	NC8	1249,990	0,08	0,08	0,00
B3336	YATAY - CHS	S 235	NC8	1249,990	0,08	0,08	0,00
B3337	YATAY - CHS	S 235	NC8	1249,990	0,08	0,08	0,00
B3338	YATAY - CHS	S 235	NC8	1249,990	0,08	0,08	0,00
B3339	YATAY - CHS	S 235	NC8	1249,990	0,08	0,08	0,00
B3340	YATAY - CHS	S 235	NC8	1249,990	0,08	0,08	0,00
B3341	YATAY - CHS	S 235	NC8	1249,990	0,08	0,08	0,00
B3342	YATAY - CHS	S 235	NC8	1249,990	0,08	0,08	0,00
B3343	YATAY - CHS	S 235	NC8	1249,990	0,08	0,08	0,00
B3344	YATAY - CHS	S 235	NC8	1249,990	0,08	0,08	0,00
B3345	YATAY - CHS	S 235	NC8	1249,990	0,08	0,08	0,00
B3346	YATAY - CHS	S 235	NC8	1249,990	0,08	0,08	0,00
B3347	YATAY - CHS	S 235	NC8	1249,990	0,08	0,08	0,00
B3348	YATAY - CHS	S 235	NC8	1249,990	0,08	0,08	0,00
B3349	YATAY - CHS	S 235	NC8	1249,990	0,08	0,08	0,00
PL941	Platform - General cross-section	S 235	NC4	1250,010	0,02	0,02	0,02
PL942	Platform - General cross-section	S 235	NC8	1093,750	0,03	0,03	0,03
PL943	Platform - General cross-section	S 235	NC4	1249,990	0,02	0,02	0,02

Member	css	mat	Case	dx [mm]	un.check [-]	sec.check [-]	stab.check [-]
PL944	Platform - General cross-section	S 235	NC8	2500,000	0,03	0,01	0,03
PL945	Platform - General cross-section	S 235	NC8	1249,990	0,02	0,02	0,02
PL946	Platform - General cross-section	S 235	NC8	2500,000	0,03	0,01	0,03
PL947	Platform - General cross-section	S 235	NC4	1250,010	0,02	0,02	0,02
PL948	Platform - General cross-section	S 235	NC8	2500,000	0,03	0,01	0,03
PL949	Platform - General cross-section	S 235	NC8	1250,010	0,02	0,02	0,02
PL950	Platform - General cross-section	S 235	NC8	2500,000	0,03	0,01	0,03
PL951	Platform - General cross-section	S 235	NC8	1249,990	0,02	0,02	0,02
PL952	Platform - General cross-section	S 235	NC8	1250,010	0,03	0,03	0,03
PL953	Platform - General cross-section	S 235	NC7	1249,990	0,02	0,02	0,02
PL954	Platform - General cross-section	S 235	NC8	1249,990	0,03	0,03	0,03
PL955	Platform - General cross-section	S 235	NC7	1249,990	0,02	0,02	0,02
PL956	Platform - General cross-section	S 235	NC8	1250,010	0,03	0,03	0,03
PL957	Platform - General cross-section	S 235	NC4	1250,010	0,02	0,02	0,02
PL958	Platform - General cross-section	S 235	NC8	1250,010	0,03	0,03	0,03
PL959	Platform - General cross-section	S 235	NC4	1249,990	0,02	0,02	0,02
PL960	Platform - General cross-section	S 235	NC8	1406,250	0,03	0,03	0,03
C537	TOPUKLUK - C	S 235	NC8	1250,010	0,26	0,02	0,26
C538	TOPUKLUK - C	S 235	NC8	1249,990	0,07	0,01	0,07
C539	TOPUKLUK - C	S 235	NC8	1249,990	0,06	0,01	0,06
C540	TOPUKLUK - C	S 235	NC8	1250,010	0,06	0,01	0,06
C541	TOPUKLUK - C	S 235	NC8	1249,990	0,12	0,01	0,12
C542	TOPUKLUK - C	S 235	NC8	1250,010	0,12	0,01	0,12
C543	TOPUKLUK - C	S 235	NC8	1249,990	0,06	0,01	0,06
C544	TOPUKLUK - C	S 235	NC8	1250,010	0,06	0,01	0,06
C545	TOPUKLUK - C	S 235	NC8	1250,010	0,07	0,01	0,07
C546	TOPUKLUK - C	S 235	NC8	1249,990	0,25	0,02	0,25
CP362	DIYAGONAL - CHS	S 235	NC8	2957,431	0,08	0,08	0,00
CP363	DIYAGONAL - CHS	S 235	NC8	2957,431	0,08	0,08	0,00
CP364	DIYAGONAL - CHS	S 235	NC8	2957,431	0,08	0,08	0,00
CP365	DIYAGONAL - CHS	S 235	NC8	2957,431	0,08	0,08	0,00
CP366	DIYAGONAL - CHS	S 235	NC8	2957,431	0,08	0,08	0,00
CP367	DIYAGONAL - CHS	S 235	NC8	2957,431	0,08	0,08	0,00
B3350	DİKME - CFCHS48.3X3	S 235	NC8	110,000	0,28	0,28	0,00
B3351	DİKME - CFCHS48.3X3	S 235	NC8	2000,000	0,24	0,24	0,00
B3352	DİKME - CFCHS48.3X3	S 235	NC8	110,000	0,37	0,37	0,00
B3353	DİKME - CFCHS48.3X3	S 235	NC8	0,000	0,30	0,30	0,00
B3354	DIKME - CFCHS48.3X3	S 235	NC8	110,000	0,35	0,35	0,00
B3355	DİKME - CFCHS48.3X3	S 235	NC8	0,000	0,32	0,32	0,00
B3356	DİKME - CFCHS48.3X3	S 235	NC8	110,000	0,36	0,36	0,00
B3357	DİKME - CFCHS48.3X3	S 235	NC8	0,000	0,33	0,33	0,00
B3358	DİKME - CFCHS48.3X3	S 235	NC8	110,000	0,38	0,38	0,00
B3359	DİKME - CFCHS48.3X3	S 235	NC8	0,000	0,34	0,34	0,00
B3360	DİKME - CFCHS48.3X3	S 235	NC8	110,000	0,43	0,43	0,00
B3361	DİKME - CFCHS48.3X3	S 235	NC8	0,000	0,35	0,35	0,00
B3362	DIKME - CFCHS48.3X3	S 235	NC8	110,000	0,38	0,38	0,00
B3363	DİKME - CFCHS48.3X3	S 235	NC8	0,000	0,34	0,34	0,00
B3364	DIKME - CFCHS48.3X3	S 235	NC8	110,000	0,36	0,36	0,00
B3365	DİKME - CFCHS48.3X3	S 235	NC8	0,000	0,33	0,33	0,00
B3366	ALT_PROFIL - RHS	S 235	NC8	200,000	0,17	0,09	0,17
B3367	ALT_PROFIL - RHS	S 235	NC8	200,000	0,18	0,11	0,18
B3368	ALT_PROFIL - RHS	S 235	NC8	200,000	0,18	0,12	0,18
B3369	ALT_PROFIL - RHS	S 235	NC8	200,000	0,18	0,13	0,18
B3370	ALT_PROFIL - RHS	S 235	NC8	700,000	0,19	0,18	0,19
B3371	ALT_PROFIL - RHS	S 235	NC8	200,000	0,17	0,12	0,17
B3372	ALT_PROFIL - RHS	S 235	NC8	700,000	0,19	0,18	0,19
B3373	ALT_PROFIL - RHS	S 235	NC8	200,000	0,18	0,13	0,18
B3374	DİKME - CFCHS48.3X3	S 235	NC8	110,000	0,35	0,35	0,00
B3375	DİKME - CFCHS48.3X3	S 235	NC8	0,000	0,32	0,32	0,00
B3376	ALT_PROFIL - RHS	S 235	NC8	200,000	0,19	0,12	0,19
B3377	DIKME - CFCHS48.3X3	S 235	NC8	110,000	0,37	0,37	0,00
B3378	DİKME - CFCHS48.3X3	S 235	NC8	0,000	0,30	0,30	0,00
B3379	ALT_PROFIL - RHS	S 235	NC8	200,000	0,18	0,11	0,18
B3380	DİKME - CFCHS48.3X3	S 235	NC8	110,000	0,28	0,28	0,00
B3381	DİKME - CFCHS48.3X3	S 235	NC8	2000,000	0,24	0,24	0,00
B3382	ALT_PROFIL - RHS	S 235	NC8	200,000	0,18	0,09	0,18
B3383	ÜST_PROFIL - RHS	S 235	NC8	700,000	0,13	0,10	0,13
B3384	ÜST_PROFIL - RHS	S 235	NC8	0,000	0,12	0,10	0,12
B3385	ÜST_PROFIL - RHS	S 235	NC8	700,000	0,11	0,09	0,11
B3386	ÜST_PROFIL - RHS	S 235	NC8	700,000	0,12	0,10	0,12
B3387	ÜST_PROFIL - RHS	S 235	NC8	700,000	0,13	0,11	0,13
B3388	ÜST_PROFIL - RHS	S 235	NC8	0,000	0,15	0,13	0,15
B3389	ÜST_PROFIL - RHS	S 235	NC8	700,000	0,13	0,11	0,13
B3390	ÜST_PROFIL - RHS	S 235	NC8	700,000	0,12	0,10	0,12
B3391	ÜST_PROFIL - RHS	S 235	NC8	700,000	0,11	0,09	0,11
B3392	ÜST_PROFIL - RHS	S 235	NC8	0,000	0,12	0,10	0,12

Member	css	mat	Case	dx [mm]	un.check [-]	sec.check [-]	stab.check [-]
B3393	ÜST_PROFIL - RHS	S 235	NC8	700,000	0,13	0,10	0,13
B3394	YATAY - CHS	S 235	NC8	1249,990	0,08	0,08	0,00
B3395	YATAY - CHS	S 235	NC8	1249,990	0,08	0,08	0,00
B3396	YATAY - CHS	S 235	NC8	1249,990	0,08	0,08	0,00
B3397	YATAY - CHS	S 235	NC8	1249,990	0,08	0,08	0,00
B3398	YATAY - CHS	S 235	NC8	1249,990	0,08	0,08	0,00
B3399	YATAY - CHS	S 235	NC8	1249,990	0,08	0,08	0,00
B3400	YATAY - CHS	S 235	NC8	1249,990	0,08	0,08	0,00
B3401	YATAY - CHS	S 235	NC8	1249,990	0,08	0,08	0,00
B3402	YATAY - CHS	S 235	NC8	1249,990	0,08	0,08	0,00
B3403	YATAY - CHS	S 235	NC8	1249,990	0,08	0,08	0,00
B3404	YATAY - CHS	S 235	NC8	1249,990	0,08	0,08	0,00
B3405	YATAY - CHS	S 235	NC8	1249,990	0,08	0,08	0,00
B3406	YATAY - CHS	S 235	NC8	1249,990	0,08	0,08	0,00
B3407	YATAY - CHS	S 235	NC8	1249,990	0,08	0,08	0,00
B3408	YATAY - CHS	S 235	NC8	1249,990	0,08	0,08	0,00
B3409	YATAY - CHS	S 235	NC8	1249,990	0,08	0,08	0,00
B3410	YATAY - CHS	S 235	NC8	1249,990	0,08	0,08	0,00
B3411	YATAY - CHS	S 235	NC8	1249,990	0,08	0,08	0,00
B3412	YATAY - CHS	S 235	NC8	1249,990	0,08	0,08	0,00
B3413	YATAY - CHS	S 235	NC8	1249,990	0,08	0,08	0,00
PL961	Platform - General cross-section	S 235	NC8	1562,500	0,03	0,03	0,03
PL962	Platform - General cross-section	S 235	NC8	2500,000	0,04	0,01	0,04
PL963	Platform - General cross-section	S 235	NC8	1249,990	0,04	0,04	0,04
PL964	Platform - General cross-section	S 235	NC8	2500,000	0,04	0,01	0,04
PL965	Platform - General cross-section	S 235	NC8	1093,750	0,03	0,03	0,03
PL966	Platform - General cross-section	S 235	NC8	2500,000	0,04	0,01	0,04
PL967	Platform - General cross-section	S 235	NC8	1249,990	0,03	0,02	0,03
PL968	Platform - General cross-section	S 235	NC8	2500,000	0,03	0,01	0,03
PL969	Platform - General cross-section	S 235	NC8	1250,010	0,02	0,02	0,02
PL970	Platform - General cross-section	S 235	NC8	1406,250	0,03	0,03	0,03
PL971	Platform - General cross-section	S 235	NC8	1249,990	0,02	0,02	0,02
PL972	Platform - General cross-section	S 235	NC8	1249,990	0,03	0,03	0,03
PL973	Platform - General cross-section	S 235	NC8	1250,010	0,03	0,02	0,03
PL974	Platform - General cross-section	S 235	NC8	1250,010	0,03	0,03	0,03
PL975	Platform - General cross-section	S 235	NC8	1406,250	0,03	0,03	0,03
PL976	Platform - General cross-section	S 235	NC8	1250,010	0,04	0,04	0,04
PL977	Platform - General cross-section	S 235	NC8	1250,010	0,04	0,04	0,04
PL978	Platform - General cross-section	S 235	NC8	1250,010	0,04	0,04	0,04
PL979	Platform - General cross-section	S 235	NC8	937,500	0,03	0,03	0,03
PL980	Platform - General cross-section	S 235	NC8	1249,990	0,04	0,04	0,04
C547	TOPUKLUK - C	S 235	NC5	1250,010	0,24	0,02	0,24
C548	TOPUKLUK - C	S 235	NC8	1250,010	0,06	0,01	0,06
C549	TOPUKLUK - C	S 235	NC8	1249,990	0,06	0,01	0,06
C550	TOPUKLUK - C	S 235	NC8	1250,010	0,06	0,01	0,06
C551	TOPUKLUK - C	S 235	NC8	1249,990	0,06	0,01	0,06
C552	TOPUKLUK - C	S 235	NC8	1250,010	0,06	0,01	0,06
C553	TOPUKLUK - C	S 235	NC8	1249,990	0,06	0,01	0,06
C554	TOPUKLUK - C	S 235	NC8	1250,010	0,06	0,01	0,06
C555	TOPUKLUK - C	S 235	NC8	1249,990	0,06	0,01	0,06
C556	TOPUKLUK - C	S 235	NC4	1249,990	0,24	0,02	0,24
CP368	DIYAGONAL - CHS	S 235	NC8	0,000	0,10	0,10	0,00
CP369	DIYAGONAL - CHS	S 235	NC8	0,000	0,12	0,12	0,00
CP370	DIYAGONAL - CHS	S 235	NC8	0,000	0,12	0,12	0,00
CP371	DIYAGONAL - CHS	S 235	NC8	0,000	0,12	0,12	0,00
CP372	DIYAGONAL - CHS	S 235	NC8	0,000	0,12	0,12	0,00
CP373	DIYAGONAL - CHS	S 235	NC8	0,000	0,10	0,10	0,00
B3414	DİKME - CFCHS48.3X3	S 235	NC8	2000,000	0,23	0,23	0,00
B3415	DİKME - CFCHS48.3X3	S 235	NC8	110,000	0,17	0,17	0,00
B3416	DİKME - CFCHS48.3X3	S 235	NC8	2000,000	0,29	0,29	0,00
B3417	DIKME - CFCHS48.3X3	S 235	NC8	110,000	0,24	0,24	0,00
B3418	DİKME - CFCHS48.3X3	S 235	NC8	2000,000	0,32	0,32	0,00
B3419	DİKME - CFCHS48.3X3	S 235	NC8	110,000	0,26	0,26	0,00
B3420	DİKME - CFCHS48.3X3	S 235	NC8	2000,000	0,31	0,31	0,00
B3421	DİKME - CFCHS48.3X3	S 235	NC8	110,000	0,27	0,27	0,00
B3422	DİKME - CFCHS48.3X3	S 235	NC8	2000,000	0,33	0,33	0,00
B3423	DIKME - CFCHS48.3X3	S 235	NC8	110,000	0,27	0,27	0,00
B3424	DİKME - CFCHS48.3X3	S 235	NC8	2000,000	0,33	0,33	0,00
B3425	DIKME - CFCHS48.3X3	S 235	NC8	110,000	0,28	0,28	0,00
B3426	DİKME - CFCHS48.3X3	S 235	NC8	2000,000	0,33	0,33	0,00
B3427	DİKME - CFCHS48.3X3	S 235	NC8	110,000	0,27	0,27	0,00
B3428	DİKME - CFCHS48.3X3	S 235	NC8	2000,000	0,31	0,31	0,00
B3429	DİKME - CFCHS48.3X3	S 235	NC8	110,000	0,27	0,27	0,00
B3430	ALT_PROFIL - RHS	S 235	NC5	700,000	0,11	0,09	0,11
B3431	ALT_PROFIL - RHS	S 235	NC8	500,000	0,18	0,06	0,18
B3432	ALT_PROFIL - RHS	S 235	NC8	500,000	0,20	0,07	0,20

Member	css	mat	Case	dx [mm]	un.check [-]	sec.check [-]	stab.check [-]
B3433	ALT_PROFIL - RHS	S 235	NC8	500,000	0,18	0,07	0,18
B3434	ALT_PROFIL - RHS	S 235	NC8	500,000	0,19	0,07	0,19
B3435	ALT_PROFIL - RHS	S 235	NC8	500,000	0,17	0,07	0,17
B3436	ALT_PROFIL - RHS	S 235	NC8	500,000	0,19	0,07	0,19
B3437	ALT_PROFIL - RHS	S 235	NC8	500,000	0,18	0,07	0,18
B3438	DİKME - CFCHS48.3X3	S 235	NC8	2000,000	0,32	0,32	0,00
B3439	DİKME - CFCHS48.3X3	S 235	NC8	110,000	0,26	0,26	0,00
B3440	ALT_PROFIL - RHS	S 235	NC8	500,000	0,20	0,07	0,20
B3441	DİKME - CFCHS48.3X3	S 235	NC8	2000,000	0,29	0,29	0,00
B3442	DİKME - CFCHS48.3X3	S 235	NC8	110,000	0,24	0,24	0,00
B3443	ALT_PROFIL - RHS	S 235	NC8	500,000	0,18	0,06	0,18
B3444	DİKME - CFCHS48.3X3	S 235	NC8	2000,000	0,22	0,22	0,00
B3445	DİKME - CFCHS48.3X3	S 235	NC8	110,000	0,17	0,17	0,00
B3446	ALT_PROFIL - RHS	S 235	NC3	700,000	0,10	0,09	0,10
B3447	ÜST_PROFIL - RHS	S 235	NC5	700,000	0,07	0,06	0,07
B3448	ÜST_PROFIL - RHS	S 235	NC8	700,000	0,09	0,07	0,09
B3449	ÜST_PROFIL - RHS	S 235	NC8	700,000	0,08	0,07	0,08
B3450	ÜST_PROFIL - RHS	S 235	NC8	700,000	0,08	0,07	0,08
B3451	ÜST_PROFIL - RHS	S 235	NC8	700,000	0,07	0,06	0,07
B3452	ÜST_PROFIL - RHS	S 235	NC8	700,000	0,09	0,08	0,09
B3453	ÜST_PROFIL - RHS	S 235	NC8	700,000	0,07	0,06	0,07
B3454	ÜST_PROFIL - RHS	S 235	NC8	700,000	0,08	0,07	0,08
B3455	ÜST_PROFIL - RHS	S 235	NC8	700,000	0,08	0,07	0,08
B3456	ÜST_PROFIL - RHS	S 235	NC8	700,000	0,09	0,07	0,09
B3457	ÜST_PROFIL - RHS	S 235	NC5	700,000	0,07	0,06	0,07
B3458	YATAY - CHS	S 235	NC8	1249,990	0,08	0,08	0,00
B3459	YATAY - CHS	S 235	NC8	1249,990	0,08	0,08	0,00
B3460	YATAY - CHS	S 235	NC8	1249,990	0,08	0,08	0,00
B3461	YATAY - CHS	S 235	NC8	1249,990	0,08	0,08	0,00
B3462	YATAY - CHS	S 235	NC8	1249,990	0,08	0,08	0,00
B3463	YATAY - CHS	S 235	NC8	1249,990	0,08	0,08	0,00
B3464	YATAY - CHS	S 235	NC8	1249,990	0,08	0,08	0,00
B3465	YATAY - CHS	S 235	NC8	1249,990	0,08	0,08	0,00
B3466	YATAY - CHS	S 235	NC8	1249,990	0,08	0,08	0,00
B3467	YATAY - CHS	S 235	NC8	1249,990	0,08	0,08	0,00
B3468	YATAY - CHS	S 235	NC8	1249,990	0,08	0,08	0,00
B3469	YATAY - CHS	S 235	NC8	1249,990	0,08	0,08	0,00
B3470	YATAY - CHS	S 235	NC8	1249,990	0,08	0,08	0,00
B3471	YATAY - CHS	S 235	NC8	1249,990	0,08	0,08	0,00
B3472	YATAY - CHS	S 235	NC8	1249,990	0,08	0,08	0,00
B3473	YATAY - CHS	S 235	NC8	1249,990	0,08	0,08	0,00
B3474	YATAY - CHS	S 235	NC8	1249,990	0,08	0,08	0,00
B3475	YATAY - CHS	S 235	NC8	1249,990	0,08	0,08	0,00
B3476	YATAY - CHS	S 235	NC8	1249,990	0,08	0,08	0,00
B3477	YATAY - CHS	S 235	NC8	1249,990	0,08	0,08	0,00
PL981	Platform - General cross-section	S 235	NC5	1250,010	0,02	0,02	0,02
PL982	Platform - General cross-section	S 235	NC8	1093,750	0,03	0,03	0,03
PL983	Platform - General cross-section	S 235	NC4	1249,990	0,02	0,02	0,02
PL984	Platform - General cross-section	S 235	NC8	2500,000	0,03	0,01	0,03
PL985	Platform - General cross-section	S 235	NC8	1249,990	0,02	0,02	0,02
PL986	Platform - General cross-section	S 235	NC8	2500,000	0,03	0,01	0,03
PL987	Platform - General cross-section	S 235	NC3	1250,010	0,02	0,02	0,02
PL988	Platform - General cross-section	S 235	NC8	2500,000	0,03	0,01	0,03
PL989	Platform - General cross-section	S 235	NC8	1250,010	0,02	0,02	0,02
PL990	Platform - General cross-section	S 235	NC8	2500,000	0,03	0,01	0,03
PL991	Platform - General cross-section	S 235	NC8	1249,990	0,02	0,02	0,02
PL992	Platform - General cross-section	S 235	NC8	1250,010	0,03	0,03	0,03
PL993	Platform - General cross-section	S 235	NC7	1250,010	0,02	0,02	0,02
PL994	Platform - General cross-section	S 235	NC8	1249,990	0,03	0,03	0,03
PL995	Platform - General cross-section	S 235	NC7	1249,990	0,02	0,02	0,02
PL996	Platform - General cross-section	S 235	NC8	1250,010	0,03	0,03	0,03
PL997	Platform - General cross-section	S 235	NC9	1250,010	0,02	0,02	0,02
PL998	Platform - General cross-section	S 235	NC8	1250,010	0,03	0,03	0,03
PL999	Platform - General cross-section	S 235	NC4	1249,990	0,02	0,02	0,02
PL1000	Platform - General cross-section	S 235	NC8	1406,250	0,03	0,03	0,03
C557	TOPUKLUK - C	S 235	NC8	1250,010	0,26	0,02	0,26
C558	TOPUKLUK - C	S 235	NC8	1249,990	0,07	0,01	0,07
C559	TOPUKLUK - C	S 235	NC8	1249,990	0,06	0,01	0,06
C560	TOPUKLUK - C	S 235	NC8	1250,010	0,06	0,01	0,06
C561	TOPUKLUK - C	S 235	NC8	1250,010	0,12	0,01	0,12
C562	TOPUKLUK - C	S 235	NC8	1250,010	0,12	0,01	0,12
C563	TOPUKLUK - C	S 235	NC8	1249,990	0,06	0,01	0,06
C564	TOPUKLUK - C	S 235	NC8	1250,010	0,06	0,01	0,06
C565	TOPUKLUK - C	S 235	NC8	1250,010	0,07	0,01	0,07
C566	TOPUKLUK - C	S 235	NC8	1249,990	0,26	0,02	0,26
CP374	DIYAGONAL - CHS	S 235	NC8	2957,431	0,08	0,08	0,00

Member	css	mat	Case	dx [mm]	un.check [-]	sec.check [-]	stab.check [-]
CP375	DIYAGONAL - CHS	S 235	NC8	2957,431	0,08	0,08	0,00
CP376	DIYAGONAL - CHS	S 235	NC8	2957,431	0,08	0,08	0,00
CP377	DIYAGONAL - CHS	S 235	NC8	2957,431	0,08	0,08	0,00
CP378	DIYAGONAL - CHS	S 235	NC8	2957,431	0,08	0,08	0,00
CP379	DIYAGONAL - CHS	S 235	NC8	2957,431	0,07	0,07	0,00
B3478	DİKME - CFCHS48.3X3	S 235	NC8	110,000	0,28	0,28	0,00
B3479	DİKME - CFCHS48.3X3	S 235	NC8	2000,000	0,24	0,24	0,00
B3480	DİKME - CFCHS48.3X3	S 235	NC8	110,000	0,37	0,37	0,00
B3481	DİKME - CFCHS48.3X3	S 235	NC8	0,000	0,30	0,30	0,00
B3482	DİKME - CFCHS48.3X3	S 235	NC8	110,000	0,35	0,35	0,00
B3483	DİKME - CFCHS48.3X3	S 235	NC8	0,000	0,32	0,32	0,00
B3484	DİKME - CFCHS48.3X3	S 235	NC8	110,000	0,36	0,36	0,00
B3485	DİKME - CFCHS48.3X3	S 235	NC8	0,000	0,33	0,33	0,00
B3486	DİKME - CFCHS48.3X3	S 235	NC8	110,000	0,37	0,37	0,00
B3487	DİKME - CFCHS48.3X3	S 235	NC8	0,000	0,33	0,33	0,00
B3488	DİKME - CFCHS48.3X3	S 235	NC8	110,000	0,43	0,43	0,00
B3489	DİKME - CFCHS48.3X3	S 235	NC8	0,000	0,34	0,34	0,00
B3490	DİKME - CFCHS48.3X3	S 235	NC8	110,000	0,37	0,37	0,00
B3491	DİKME - CFCHS48.3X3	S 235	NC8	0,000	0,33	0,33	0,00
B3492	DİKME - CFCHS48.3X3	S 235	NC8	110,000	0,36	0,36	0,00
B3493	DİKME - CFCHS48.3X3	S 235	NC8	0,000	0,33	0,33	0,00
B3494	ALT_PROFIL - RHS	S 235	NC8	200,000	0,17	0,09	0,17
B3495	ALT_PROFIL - RHS	S 235	NC8	200,000	0,18	0,11	0,18
B3496	ALT_PROFIL - RHS	S 235	NC8	200,000	0,19	0,12	0,19
B3497	ALT_PROFIL - RHS	S 235	NC8	200,000	0,18	0,13	0,18
B3498	ALT_PROFIL - RHS	S 235	NC8	700,000	0,19	0,18	0,19
B3499	ALT_PROFIL - RHS	S 235	NC8	200,000	0,18	0,12	0,18
B3500	ALT_PROFIL - RHS	S 235	NC8	700,000	0,19	0,18	0,19
B3501	ALT_PROFIL - RHS	S 235	NC8	200,000	0,18	0,13	0,18
B3502	DİKME - CFCHS48.3X3	S 235	NC8	110,000	0,35	0,35	0,00
B3503	DİKME - CFCHS48.3X3	S 235	NC8	0,000	0,32	0,32	0,00
B3504	ALT_PROFIL - RHS	S 235	NC8	200,000	0,19	0,12	0,19
B3505	DİKME - CFCHS48.3X3	S 235	NC8	110,000	0,37	0,37	0,00
B3506	DİKME - CFCHS48.3X3	S 235	NC8	0,000	0,30	0,30	0,00
B3507	ALT_PROFIL - RHS	S 235	NC8	200,000	0,18	0,11	0,18
B3508	DİKME - CFCHS48.3X3	S 235	NC8	110,000	0,28	0,28	0,00
B3509	DİKME - CFCHS48.3X3	S 235	NC8	2000,000	0,24	0,24	0,00
B3510	ALT_PROFIL - RHS	S 235	NC8	200,000	0,18	0,09	0,18
B3511	ÜST_PROFIL - RHS	S 235	NC8	700,000	0,13	0,11	0,13
B3512	ÜST_PROFIL - RHS	S 235	NC8	0,000	0,12	0,10	0,12
B3513	ÜST_PROFIL - RHS	S 235	NC8	700,000	0,11	0,09	0,11
B3514	ÜST_PROFIL - RHS	S 235	NC8	700,000	0,12	0,10	0,12
B3515	ÜST_PROFIL - RHS	S 235	NC8	700,000	0,14	0,11	0,14
B3516	ÜST_PROFIL - RHS	S 235	NC8	0,000	0,15	0,13	0,15
B3517	ÜST_PROFIL - RHS	S 235	NC8	700,000	0,14	0,11	0,14
B3518	ÜST_PROFIL - RHS	S 235	NC8	700,000	0,12	0,10	0,12
B3519	ÜST_PROFIL - RHS	S 235	NC8	700,000	0,11	0,09	0,11
B3520	ÜST_PROFIL - RHS	S 235	NC8	0,000	0,12	0,10	0,12
B3521	ÜST_PROFIL - RHS	S 235	NC8	700,000	0,14	0,11	0,14
B3522	YATAY - CHS	S 235	NC8	1249,990	0,08	0,08	0,00
B3523	YATAY - CHS	S 235	NC8	1249,990	0,08	0,08	0,00
B3524	YATAY - CHS	S 235	NC8	1249,990	0,08	0,08	0,00
B3525	YATAY - CHS	S 235	NC8	1249,990	0,08	0,08	0,00
B3526	YATAY - CHS	S 235	NC8	1249,990	0,08	0,08	0,00
B3527	YATAY - CHS	S 235	NC8	1249,990	0,08	0,08	0,00
B3528	YATAY - CHS	S 235	NC8	1249,990	0,08	0,08	0,00
B3529	YATAY - CHS	S 235	NC8	1249,990	0,08	0,08	0,00
B3530	YATAY - CHS	S 235	NC8	1249,990	0,08	0,08	0,00
B3531	YATAY - CHS	S 235	NC8	1249,990	0,08	0,08	0,00
B3532	YATAY - CHS	S 235	NC8	1249,990	0,08	0,08	0,00
B3533	YATAY - CHS	S 235	NC8	1249,990	0,08	0,08	0,00
B3534	YATAY - CHS	S 235	NC8	1249,990	0,08	0,08	0,00
B3535	YATAY - CHS	S 235	NC8	1249,990	0,08	0,08	0,00
B3536	YATAY - CHS	S 235	NC8	1249,990	0,08	0,08	0,00
B3537	YATAY - CHS	S 235	NC8	1249,990	0,08	0,08	0,00
B3538	YATAY - CHS	S 235	NC8	1249,990	0,08	0,08	0,00
B3539	YATAY - CHS	S 235	NC8	1249,990	0,08	0,08	0,00
B3540	YATAY - CHS	S 235	NC8	1249,990	0,08	0,08	0,00
B3541	YATAY - CHS	S 235	NC8	1249,990	0,08	0,08	0,00
PL1001	Platform - General cross-section	S 235	NC8	1562,500	0,03	0,03	0,03
PL1002	Platform - General cross-section	S 235	NC8	2500,000	0,04	0,01	0,04
PL1003	Platform - General cross-section	S 235	NC8	1249,990	0,04	0,04	0,04
PL1004	Platform - General cross-section	S 235	NC8	2500,000	0,04	0,01	0,04
PL1005	Platform - General cross-section	S 235	NC8	1093,750	0,03	0,03	0,03
PL1006	Platform - General cross-section	S 235	NC8	2500,000	0,04	0,01	0,04
PL1007	Platform - General cross-section	S 235	NC8	1249,990	0,02	0,02	0,02

Member	css	mat	Case	dx [mm]	un.check [-]	sec.check [-]	stab.check [-]
PL1008	Platform - General cross-section	S 235	NC8	2500,000	0,03	0,01	0,03
PL1009	Platform - General cross-section	S 235	NC8	1250,010	0,02	0,02	0,02
PL1010	Platform - General cross-section	S 235	NC8	1406,250	0,03	0,03	0,03
PL1011	Platform - General cross-section	S 235	NC8	1249,990	0,02	0,02	0,02
PL1012	Platform - General cross-section	S 235	NC8	1249,990	0,03	0,03	0,03
PL1013	Platform - General cross-section	S 235	NC8	1250,010	0,02	0,02	0,02
PL1014	Platform - General cross-section	S 235	NC8	1250,010	0,03	0,03	0,03
PL1015	Platform - General cross-section	S 235	NC8	1406,250	0,03	0,03	0,03
PL1016	Platform - General cross-section	S 235	NC8	1250,010	0,04	0,04	0,04
PL1017	Platform - General cross-section	S 235	NC8	1250,010	0,04	0,04	0,04
PL1018	Platform - General cross-section	S 235	NC8	1250,010	0,04	0,04	0,04
PL1019	Platform - General cross-section	S 235	NC8	937,500	0,03	0,03	0,03
PL1020	Platform - General cross-section	S 235	NC8	1249,990	0,04	0,04	0,04
C567	TOPUKLUK - C	S 235	NC4	1250,010	0,26	0,02	0,26
C568	TOPUKLUK - C	S 235	NC8	1249,990	0,06	0,01	0,06
C569	TOPUKLUK - C	S 235	NC8	1249,990	0,06	0,01	0,06
C570	TOPUKLUK - C	S 235	NC8	1250,010	0,06	0,01	0,06
C571	TOPUKLUK - C	S 235	NC8	1249,990	0,06	0,01	0,06
C572	TOPUKLUK - C	S 235	NC8	1250,010	0,06	0,01	0,06
C573	TOPUKLUK - C	S 235	NC8	1249,990	0,06	0,01	0,06
C574	TOPUKLUK - C	S 235	NC8	1250,010	0,06	0,01	0,06
C575	TOPUKLUK - C	S 235	NC8	1249,990	0,06	0,01	0,06
C576	TOPUKLUK - C	S 235	NC5	1249,990	0,26	0,02	0,26
CP380	DIYAGONAL - CHS	S 235	NC8	0,000	0,10	0,10	0,00
CP381	DIYAGONAL - CHS	S 235	NC8	0,000	0,12	0,12	0,00
CP382	DIYAGONAL - CHS	S 235	NC8	0,000	0,12	0,12	0,00
CP383	DIYAGONAL - CHS	S 235	NC8	0,000	0,12	0,12	0,00
CP384	DIYAGONAL - CHS	S 235	NC8	0,000	0,12	0,12	0,00
CP385	DIYAGONAL - CHS	S 235	NC8	0,000	0,10	0,10	0,00

demirel YAPI

www.demireliskele.com

İKSD İSKELE KALIP SANAYİCİLERİ DERNEĞİ ÜYESİDİR

Demirel Yapı İskele ve Kalıp Sistemleri
B.Bakkalköy Mh. Samandıra Cd. No 40 Maltepe İstanbul TURKEY
+90 (216) 561 79 65 +90 (549) 210 31 31